WARNING

This is a single engined light aircraft.

It should be flown with a view to the engine ceasing at any time and appropriate precautions taken.

Accidents is light aircraft can result in serious injury, and even death.

IT IS THE PILOT'S RESPONSIBILITY TO BE FULLY ACQUAINTED WITH THIS FLIGHT MANUAL AND TO BE CURRENT IN EMERGENCY PROCEDURES BEFORE FLIGHT.

IN ADDITION, IT IS THE PILOT'S RESPONSIBILITY TO ADVISE INTENDING PASSENGERS OR OTHER USERS OF THIS STATEMENT AND OF THE APPROPRIATE SAFETY PRECAUTIONS.

We have also included some specific safety warnings here, in a preface, as they are vital to your safety and the safety of others.

GENERAL SAFETY WARNINGS

1. FUEL

* Never handle fuel in an area that is enclosed or where fumes could reach ignition point. DO NOT SMOKE or allow open flames or sparks in the vicinity. Never add fuel while the engine is running.
* Never refuel an aircraft if fuel could be spilled on hot engine components (this should not be a problem with the JABIRU due to the location of the fuel tank and filler).
* Use only approved fuel containers and never transport fuel in an unsafe manner.
* Always check for fuel contamination. Contamination is a major cause of engine failure. The best place to avoid contamination is at the source. Once your fuel is in the container a very hazardous potential exists. Use a clean safety approved storage container. Do not overfill the container - allow for expansion.
* The engine is designed for use with aviation gasolines. It is NOT approved for use with Automotive grade fuel. Be sure to use products of at least the standard shown in Paragraph 1.3.3 of this Manual.
* Always earth the aircraft through the Earthing Points provided at the fuel filler and the exhaust pipe.
* Before first flight of the day, and after each refueling, use a sampler cup and drain a small quantity of fuel from the fuel tank sump quick drain valve - check for water, sediment and contamination.

2. ENGINE

* Never run engine without proper loading eg. propellor.
* Make sure all engine controls are operative; that you know the ON & OFF positions of throttle and ignition and that you can operate them instinctively without hesitation.
* Check engine mounting system frequently as well as fuel lines, wiring and fuel and air filters.
* Never run the engine on the ground with the propellor turning unless you are doing so in a run-up area and can observe anyone and anything entering the danger area. An observer in a safe place is a definite asset.
* Never leave your aircraft unattended while the engine is running.
* Maintain the Engine and Airframe Log Books by entering all significant maintenance and unusual operations. Do not fly unless you have corrected the problem and recorded the correction in the appropriate Log.
* Ensure that your aircraft is maintained by an appropriately qualified and experienced person.

Section: 0 COVER PAGE

NAME OF MANUFACTURER

Jabiru Aircraft Pty Ltd

Airport Drive
Bundaberg Queensland 4670
Australia

Postal Address:
P.O. Box 5186
Bundaberg West Queensland 4670
Australia

Telephone:
07 4155 1778

AIRCRAFT TYPE & MODEL

Type: JABIRU
Model: SP 470

APPROVAL PAGE

Nationality and Registration Marks	Australia
Manufacturer	Jabiru Aircraft Pty Ltd
Designation of Aircraft	SP 470
Registration Number	
Aircraft Serial Number	

TABLE OF CONTENTS

AMENDMENT RECORD SHEET

Amendment No.	Paragraph (s)Affected	Signature.	Date of Incorporation

Incorporation of a General Amendment must be certified by inserting the date of incorporation & signature in the appropriate columns.

All amendments must be embodied consecutively.

PARTICULAR AMENDMENT RECORD SHEET

Incorporation of a Particular Amendment must be certified by inserting the date of incorporation & signature in the appropriate columns below.

All amendments must be embodied consecutively. This page will be reissued with each Particular Amendment.

Superseded pages should be withdrawn from the Manual & destroyed.

Amendment No.	Paragraph (s)Affected	Signature.	Date of Incorporation

INTRODUCTORY PAGE

This Flight Manual applies only to the particular aircraft identified by the registration marking and serial number on the Approval Page and contains the airworthiness limitations and essential operating data for this aircraft.

Special operations requiring additional limitations and instructions are listed in the "Supplements Section" and this section shall be consulted before undertaking any such operations. For operating information not included in this manual, reference should be made to the appropriate operations or manufacturer's manuals.

The Flight Manual shall be carried in the aircraft on all flights.

The pilot in command of the aircraft shall comply with all requirements, procedures and limitations with respect to the operation of the aircraft set out in the Flight Manual for the aircraft.

Amendments shall be issued by Jabiru as necessary and will take the form of replacement pages, with the changes to the text indicated by a vertical line in the margin together with the amendment date at the bottom of the page. Interim/Temporary amendments may be issued in the same manner and are to be inserted as directed. These amendments will be issued on coloured pages and will take precedence over the stated affected page. It is the owner's responsibility to incorporate in this manual all such amendments, and to enter the date of incorporation and his signature on the appropriate Amendment Record Sheet.

This aircraft has been certificated on the basis of the equipment fitted at the time of certification. Any changes in equipment are subject to approval by the Authority.

No entries or endorsements may be made to this Flight Manual except in the manner and by persons authorised for the purpose.

REVISIONS

Revisions to this Flight Manual will be distributed to all JABIRU Service Agents and to owners of aircraft registered with JABIRU AIRCRAFT Pty Ltd.

Revisions should be examined immediately upon receipt and incorporated in this Manual.

NOTE

It is the responsibility of the owner to maintain this Manual in a current status when it is being used for operational purposes.

Owners should contact JABIRU AIRCRAFT PTY LTD whenever the revision status of their Manual is in question.

A revision bar will extend the full length of new or revised text and/or illustrations added on new or presently existing pages. This bar will be located adjacent to the applicable revised area on the outer margin of the page.

All revised pages will carry the revision number and the date on the applicable page.

The following List of Effective Pages provides the dates of issue for original and revised pages, and a listing of all pages in the Manual. Pages affected by the current revision are indicated by an asterisk (*) preceding the pages listed.

LIST OF EFFECTIVE PAGES

The dates of issue for original & revised pages are:

Page	Issue	Date	Page	Issue	Date	Page	Issue	Date
	Section 0			**Section 3**			**Section 5**	
0-1	0	Dec 99	3-1	0	Dec 99	5-1	0	Dec 99
0-2	0	Dec 99	3-2	0	Dec 99	5-2	0	Dec 99
0-3	0	Dec 99	3-3	0	Dec 99	5-3	0	Dec 99
0-4	0	Dec 99	3-4	0	Dec 99			
0-5	00	Dec 99	3-5	0	Dec 99			
0-6	0	Dec 99	3-6	0	Dec 99			
0-7	0	Dec 99	3-7	0	Dec 99			
0-8	0	Dec 99	3-8	0	Dec 99		**Section 6**	
0-9	0	Dec 99	3-9	0	Dec 99	6-1	0	Dec 99
0-10	0	Dec 99	3-10	0	Dec 99	6-2	0	Dec 99
0-11	0	Dec 99	3-11	0	Dec 99	6-3	0	Dec 99
			3-12	0	Dec 99	6-4	0	Dec 99
			3-13	0	Dec 99	6-5	0	Dec 99
						6-6	0	Dec 99
						6-7	0	Dec 99
	Section 1			**Section 4**				
1-1	0	Dec 99	4-1	0	Dec 99			
1-2	0	Dec 99	4-2	0	Dec 99			
1-3	0	Dec 99	4-3	0	Dec 99			
			4-4	0	Dec 99			
			4-5	0	Dec 99			
			4-6	0	Dec 99			
			4-7	0	Dec 99			
			4-8	0	Dec 99			
	Section 2		4-9	0	Dec 99			
2-1	0	Dec 99	4-10	0	Dec 99			
2-2	0	Dec 99	4-11	0	Dec 99			
2-3	0	Dec 99	4-12	0	Dec 99			
2-4	0	Dec 99	4-13	0	Dec 99			
2-5	0	Dec 99	4-14	0	Dec 99			
2-6	0	Dec 99	4-15	0	Dec 99			
2-7	0	Dec 99	4-16	0	Dec 99			
2-8	0	Dec 99	4-17	0	Dec 99			
			4-18	0	Dec 99			
			4-19	0	Dec 99			

DEFINITIONS

AIRFIELD PRESSURE ALTITUDE	The Airfield Pressure Altitude is that altitude registered at the surface of the aerodrome by an altimeter with the pressure subscale set to 1013 millibars
INDICATED AIRSPEED (I.A.S.)	Indicated airspeed, which is the reading obtained from an airspeed indicator having no calibration error.
TAKEOFF SAFETY SPEED	The Takeoff Safety Speed is a speed chosen to ensure that adequate control will exist under all conditions, including turbulence and sudden and complete engine failure, during the climb after takeoff.
LANDING SAFETY SPEED	The Landing Safety Speed is the speed chosen to ensure that adequate control will exist under all conditions, including turbulence, to carry out normal flare and touchdown.
NORMAL OPERATING SPEED	This speed shall not normally be exceeded. Operations above the Normal Operating Speed shall be conducted with caution and only in smooth air.
Va MANOEUVRING SPEED	Maximum for manoeuvres involving an approach to stall conditions or full application of the primary flight controls.
KCAS KNOTS CALIBRATED AIRSPEED	Indicated airspeed corrected for position and instrument error and expressed in knots. KCAS is equal to KTAS in standard atmosphere at sea level
KIAS KNOTS INDICATED AIRSPEED	The speed shown on the airspeed indicator and expressed in knots.
KTAS KNOTS TRUE AIRSPEED	The airspeed expressed in knots relative to undisturbed air which is KCAS corrected for altitude and temperature.
V fe MAXIMUM FLAP EXTENDED SPEED	The highest speed permissible with wing flaps in the prescribed extended position.
V no MAXIMUM STRUCTURAL CRUISING SPEED	The speed that should not be exceeded except in smooth air, and then only with caution.
V ne NEVER EXCEED SPEED	The speed limit that may not be exceeded at any time.

V s1 STALLING SPEED	The stall speed or minimum steady flight speed at which the airplane is controllable in a specified configuration.
V so STALLING SPEED LANDING CONFIGURATION	The stall speed or minimum steady flight speed at which the airplane is controllable in the landing configuration at the most forward centre of gravity.
V x BEST ANGLE-OF-CLIMB SPEED	The speed which results in the greatest gain of altitude in a given horizontal distance.
V y BEST RATE-OF-CLIMB SPEED	The speed which results in the greatest gain in altitude in a given time.

METEOROLOGICAL TERMINOLOGY

OAT OUTSIDE AIR TEMPERATURE	The free static air temperature. It is expressed in either degrees Celsius or degrees Fahrenheit.
STANDARD TEMPERATURE	Standard Temperature is 15 degrees C at sea level pressure altitude and decreases by 2 degrees C for each 1000 feet of altitude.
PRESSURE ALTITUDE	The altitude read from the an altimeter when the altimeter's barometric scale has been set to 1013 mb (29.92 inches of mercury).

ENGINE POWER TERMINOLOGY

BHP BRAKE HORSEPOWER	The power developed by the engine.
RPM REVOLUTIONS PER MINUTE	Engine speed.
STATIC RPM	The engine speed attained during a full-throttle engine runup when the airplane is on the ground and stationary.

AIRPLANE PERFORMANCE AND FLIGHT PLANNING TERMINOLOGY

MAXIMUM CROSSWIND VELOCITY	The velocity of the crosswind component for which adequate control of the airplane during takeoff and landing was actually demonstrated during the certification tests. The value shown is limiting.
USEABLE FUEL	The fuel available for flight planning
UNUSABLE FUEL	The quantity of fuel that cannot be safely used in flight
LPH LITRES PER HOUR	The amount of fuel (in litres) consumed per hour
NMPL NAUTICAL MILES PER LITRE	The distance (in nautical miles) which can be expected per litre of fuel consumed at a specific engine power setting and/or flight configuration.
g	The acceleration due to gravity.

WEIGHT AND BALANCE TERMINOLOGY

STATION	Only two load stations are specified: ie Seat Station which is the centre of the fixed seats and Fuel Station which is the centre of the fixed fuel tank.
C.G. CENTRE OF GRAVITY	The point at which an airplane, or equipment, would balance if suspended.
C.G. LIMITS	The extreme centre of gravity locations within which the airplane must be operated at a given weight.
STANDARD EMPTY WEIGHT	The weight of a standard airplane, including unusable fuel, full operating fluids and full engine oil.
BASIC EMPTY WEIGHT	The standard empty weight plus the weight of optional equipment.
USEFUL LOAD -	The difference between ramp weight and the basic empty weight.
MTOW MAXIMUM TAKEOFF WEIGHT	The maximum weight approved for the start of the takeoff run.

Section: 1 GENERAL

Table of Contents

Section: 1 GENERAL

1.1.THREE VIEW DRAWING

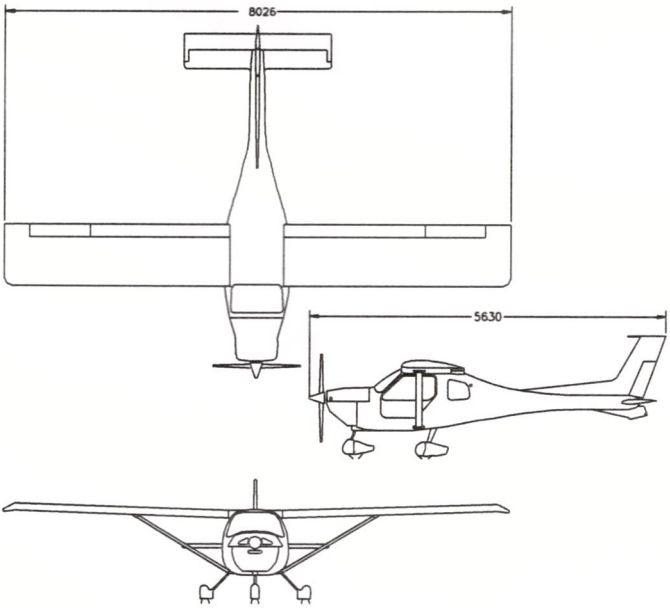

Ground Turning Radius = 5.7 metres.

1.2. DESCRIPTIVE DATA

1.2.1.ENGINE

Manufacturer:	Jabiru Aircraft Pty Ltd Aero Engines Division
Type:	2200 Air Cooled

1.2.2.PROPELLER

Manufacturer:	Jabiru Aircraft Pty Ltd
Type:	Fixed Pitch Wooden Dwg No. C000242-D60P42
Diameter:	60 inches (1524 mm)
Pitch:	42 inches (1025 mm)

1.2.3.APPROVED FUEL TYPES AND GRADES

100 LL or 100/130 grade aviation gasoline

1.2.4.FUEL CAPACITY

Total:	65.0 litres
Useable	64.5 litres

1.2.5.APPROVED OIL GRADES

Aero Oil W Multigrade 15W- 50

Or equivalent Lubricant Complying with,

MIL-L-22851C, or

Lycoming Spec301F, or

Teledyne Continental Spec MHF-24B

1.2.6.OIL CAPACITY

Sump capacity is 2.0 litres

1.2.7.TYRE INFLATION PRESSURES

Standard Mains:	168 kpa	(24 psi)
Nose:	84 - 105 kpa	(12-15 psi)

Section: 2 LIMITATIONS

Table of Contents

[1] Issue 2 Incorporates Revision to Aft CG Limit in Weight and Balance Limiations.

Section: 2 LIMITATIONS

2.1. INTRODUCTION

Section 2 includes operating limitations, instrument markings and basic placards necessary for the safe operation of the airplane, its engine, standard systems and standard equipment. Observance of these operating limitations is required.

The aeroplane shall be operated so that the limitations and instructions included in this section are observed.

2.2. TYPE OF OPERATION

VFR by Day
No aerobatics, including Spins.

2.3. AIRSPEED LIMITATIONS

Airspeed limitations and their operational significance are shown below.

SPEED	KIAS	REMARKS
V ne Never exceed speed	116	Do not exceed this speed in any operation.
V no Maximum structural cruising speed	91	Do not exceed this speed except in smooth air, and then only with caution.
V a Manoeuvring speed	91	Do not make full or abrupt control movements above this speed.
V fe Maximum flap extended speed	70	Do not exceed this speed with flaps down.

Airspeed Indicator Markings and their operational significance are shown below.

MARKING	KIAS Value/Range	SIGNIFICANCE
White Arc	35 – 70	Full flap operating range. Lower limit is max. weight Vso in landing configuration. Upper limit is max. speed permissible with flaps extended.
Green Arc	46 – 91	Normal operating range. Lower limit is Take-off Safety speed. Upper limit is max. structural cruising speed.
Yellow Arc	91 – 116	Operations must be conducted with caution and only in still air.
Red Line	116	Vne

2.4. WEIGHTS and LOADING

Maximum takeoff weight 470 kg

Maximum landing weight 470 kg

2.5. CENTRE OF GRAVITY LIMITS

Forward: 1601 mm aft of datum up to & including 420 kg
1661 mm aft of datum @ 470 kg.
Variation is linear between 400 & 450 kg.

Aft 1695 mm aft of datum at all weights

Datum : 1403 mm forward of RLE of Mainplane

Leveling Means:

Longitudinal Spirit Level placed on I the lower doorsill on the left-hand side of the fuselage.

Lateral Spirit Level placed across the fuselage forward of the firewall on cowl location rubbers.

2.6. POWERPLANT LIMITATIONS

Instrument	Yellow Arc	Green Arc	Red Radial Line/Arc
Tachometer			3200 RPM
Oil Temperature		50°C - 118°c	118°C
Oil Pressure	80 kPa - 220 kPa	220 kPa - 525 kPa	80 kPa
Cylinder Head Temperature		100°C - 200°C	200°C

Minimum Oil Temperature for Takeoff	Needle must be seen to move off the stop before Takeoff	
Minimum Oil Pressure	in Level Flight or climb	220 kPa
	In Descent	80 kPa
Maximum Cylinder Head Temperature		175°C
Maximum RPM for all operations		3200
Full Throttle Static RPM	Not Above	3000
	Not Under	2800

2.7. OTHER LIMITATIONS

2.7.1. AUTHORISED MANOEUVRES AND ASSOCIATED LIMITATIONS

Aerobatic manoeuvres, including spins, are not approved.

2.7.2. SMOKING

Prohibited.

2.7.3. MAXIMUM AIR TEMPERATURE FOR OPERATIONS

40°c for takeoff at gross weight.

2.7.4. FLIGHTS WITH DOORS REMOVED

Prohibited.

2.7.5. MAXIMUM PERMISSIBLE NUMBER OF OCCUPANTS

Two (including Pilot).

2.7.6. MAXIMUM CROSSWIND VELOCITY

14 knots

2.9. PLACARDS

Cockpit Placards General

Warning Placard P/No5073494	WARNING • Users of this aircraft do so at their own risk • This aircraft must be flown in accordance with the Owners Manual • Aerobatics Including spins are PROHIBITED • Noise Level at Full Power exceeds 95 dB(A). Ear Protection Should be worn AIRCRAFT TYPE : JABIRU 470 SP Designed and Manufactured in Australia by JABIRU AIRCRAFT Pty Ltd BUNDABERG QLD Fitted on the rear Face of the Forward Wing Spar Carry-through Beam in the Cabin Ceiling.
Flight Manual P/No 5036094	FLIGHT MANUAL Fitted to Inside of RH Door above the Door Pocket.
Door Open LHS P/No5027094	OPEN Fitted to the Outsides of LH Door Above the Door Catch Lever
Door Open RHS P/No 5028094	OPEN Fitted to the outside of RH Door Above the Door Catch Level
Door String Placard P/No5026094	PULL TO OPEN Fitted on Inside of both Doors Above Door Handle.
Fuel Contents Appropriate to Fuel Tank Fitted	Fitted on the Forward Side of the Fuel Tank
Baggage Label P/No 5099084	BAGGAGE LOAD BAGGAGE BEHIND SEATS ONLY DO NOT LOAD AFT OF THIS POINT COMBINED WEGHT OF FUEL AND BAGGAGE STOWED BESIDE FUEL TANK MUST NOT EXCEED 36 KG WITHOUT REFERENCE TO THE OWNERS MANUAL LOAD AND TRIM SHEET. Fitted on inside of fuselage on RHS with Line aligned with aft face of the fuel tank.
Loading Limitations P/No 5098294	

	LOADING LIMITATIONS 1. The maximum gross weight of the aircraft is not to exceed 470 kg. 2. All baggage must be stowed either on the passenger seat, or on either side of the fuel tank below the level of the seat backs 3. Pilots must use the Load and Trim Sheet given in Section 6 of the Owner's Manual to check the trim. Fitted on inside of fuselage of RHS of cabin between Door and Rear Window.

Cockpit Controls

Trim Position P/No5024094	NOSE DOWN ← NEUTRAL TRIM	NOSE UP → BRAKE ON → Fitted on the Top of the Main Beam Beside the trim control
Fuel Tap Position P/No 5023094	FUEL OFF ON Fitted on the Main Beam beside the Fuel ON-OFF Valve
Choke Cable P/No5051094	CHOKE PULL ON Fitted at the base of the choke cable.
Carby Heat P/No 5026194	CARB HEAT PULL ON Fitted at the base of the CARBY Heat Cable. Note: This placard may be incorporated into the fascia of the instrument panel.

External Fuselage

Static Port (P/No 5043094	STATIC VENT KEEP CLEAR Attach to LHS of Vertical Fin in line with Static Tube
Electrical Earthing P/No 5078064	EARTH ON NOSE LEG Attach above the Earthing Pole adjacent to the Fuel Filler Cap.
Fuel Grade P/No 5091064	FUEL AVGAS 100LL 65 Litre Capacity Earth on Post Attach to the side of the fuselage above the filler cap.
Wing Bolt Tightening P/No 5039094 Qty 8 Required	DANGER DO NOT TIGHTEN Attach to the fuselage and wings beside each wing, and lift strut attachment fitting.

Section: 3 EMERGENCY PROCEDURES

Table of Contents

Section: 3 EMERGENCY PROCEDURES

3.1.INTRODUCTION

Section 3 provides checklist and other procedures for coping with emergencies that may occur. Emergencies caused by aeroplane malfunctions are rare if proper preflight inspections and maintenance are practiced. Enroute weather emergencies can be minimised or eliminated by careful flight planning and good judgement when unexpected weather is encountered. However, should an emergency arise, the basic guidelines outlined in this section should be considered and applied as necessary to correct the problem.

3.2.AIRSPEEDS FOR EMERGENCY OPERATION

Engine Failure After Takeoff	53-55 KIAS
Manoeuvring Speed (at all weights)	91 KIAS
Maximum Glide Distance, Still Air	57 KIAS [1]
Precautionary Landing Approach with Engine Power	55 KIAS
Landing Approach Without Engine Power:	
landing Flaps Up	60 KIAS
landing Flaps Down	53 KIAS

Note[1] A slightly higher speed may give better distance over the ground if gliding into wind; a slightly lower speed if gliding downwind.

3.3.OPERATIONAL CHECKLISTS

3.3.1. ENGINE FAILURES

. ENGINE FAILURE DURING TAKEOFF RUN

1	Throttle	Idle
2	Brakes	Apply
3	Ignition Switches	OFF
4	Master Switch	OFF

. ENGINE FAILURE IMMEDIATELY AFTER TAKEOFF

1	Airspeed	50-55 KIAS
2	Fuel Shutoff Valve	OFF
3	Ignition Switches	OFF
4	Wing Flaps	as required
5	Master Switch	OFF

. ENGINE FAILURE DURING FLIGHT

1	Airspeed	Best Glide Angle 57 KIAS [1]
2	Carburetor Heat	ON
3	Fuel Shutoff Valve	ON
4	Fuel Pump	ON
5	Ignition Switches	ON

Note[1] *A slightly higher speed may give better distance over the ground if gliding into wind; a slightly lower speed if gliding downwind*

AIRSTART & LIMITATIONS

In the event that the engine is stopped during flight, it may be restarted by application of fuel & ignition, provided that the propeller is still windmilling.

The propeller may stop windmilling below 50 KIAS.

The JABIRU 2200 engine is a high compression (7.8 : 1) engine & therefore airstarts when the propeller has stopped rotating, without use of starter, are unlikely before reaching V ne.

Therefore, the following procedure addresses only airstarts by use of the Starter Motor.

IMPORTANT

DO NOT **depress starter button while propeller is rotating.**

1	Ignition Switches	OFF
2	Cabin	Clear
3	Increase angle of attack & reduce speed (up to & including a stall) until propeller stops rotation	
4	Establish Glide	57 KIAS
5	Fuel	ON
6	Fuel Pump	ON
7	Master	ON
8	Ignition Switches	ON
9	Starter Button	Depress
10	Throttle	Open
11	Repeat as necessary: ensuring propeller has stopped rotation before each restart attempt.	

Note: The engine cools quickly with the propeller stopped. Choke may need to be used to start.

3.3.2. FIRES

FIRE DURING START ON GROUND

1	Cranking	CONTINUE to get a start that would suck the flames and accumulated fuel through the carburettor and into the engine.	
If engine starts,			
2	Power	1500 RPM	
3	Fuel	OFF & allow engine to empty carburettor	
4	Engine	Inspect for damage	
If engine fails to start,			
5	Cranking	CONTINUE in an effort to obtain a start. If no start in 15 seconds, Shut off fuel & continue to crank for another 15 seconds.	
6	Fire Extinguisher	Obtain (have ground attendants obtain if not installed).	
7	Engine	SECURE.	
		A Master Switch	OFF
		B Ignition Switch.....	OFF
		C Fuel Pump Switch..	OFF
		D Fuel Shutoff Valve.	OFF
8	Fire	Extinguish using fire extinguisher, wool blanket, or dirt.	
9	Fire Damage	Have authorised people inspect, repair damage or replace damaged components or wiring before conducting another flight.	

. ENGINE FIRE IN FLIGHT

1	Throttle	CLOSED
2	Fuel Shutoff Valve	OFF
3	Mag Switches	OFF
4	Master Switch	OFF
5	Fuel Pump Switch	OFF
6	Cabin Air	OFF
7	Airspeed	57 KIAS (if fire is not extinguished, increase glide speed to find an airspeed which will provide an incombustible mixture).
8	Forced Landing	Execute (as described in Emergency Landing Without Engine Power).

. ELECTRICAL FIRE IN FLIGHT

1	Master Switch	OFF
2	All Other Switches	OFF
3	Vents/cabin air	OPEN
If fire appears out and electrical power is necessary for continuance of flight:		
4	Master Switch	ON
5	Fuses	CHECK for faulty circuit, **DO NOT** reset or replace.
6	Radio/Electrical Switches	ON one at a time, with delay after each until short circuit is localised.
7	Land as soon as possible to inspect for damage	

. CABIN FIRE

1	Master Switch	OFF
2	Vents/Cabin Air	OPEN
3	Land as soon as possible to inspect for damage.	

3.3.3. FORCED LANDING

. EMERGENCY LANDING WITHOUT ENGINE POWER

1	Airspeed	57-60 KIAS (flaps UP) Approach 50 KIAS (flaps DOWN)
2	Fuel Shutoff Valve	OFF
3	Fuel Pump	OFF
4	Ignition Switches	OFF
5	Wing Flaps	as required
6	Master Switch	OFF
7	Touchdown	Slightly Tail Low
8	Brakes	as required

. PRECAUTIONARY LANDING WITH ENGINE POWER

1	Airspeed	57-60 KIAS
2	Wing Flaps	1st Stage
3	Fuel Pump	ON
4	Selected Field	FLY OVER Note terrain and obstructions
5	Radio and Electrical Switches	ON
6	Wing Flaps	FULL (on final approach)
7	Airspeed	50 KIAS
8	Touchdown	Slightly Tail Low
9	Ignition Switch	OFF
10	Brakes	as required

. DITCHING

1	Radio	Transmit MAYDAY on area frequency, giving location and intentions.
2	Heavy Objects	SECURE
3	Approach	High winds, heavy seas INTO wind Light winds, heavy swells Parallel to Swells
4	Wing Flaps	FULL
5	Power	establish 50 ft/min descent at 45-50 KIAS
6	Touchdown	level attitude
7	Face	Cushion at touchdown with folded coat or cushion
8	Aeroplane	Evacuate through cabin doors. If necessary, breakout windows and flood fuselage to equalise pressure so doors can be opened.
9	Lifevests	Inflate

. LANDING WITH A FLAT MAIN TYRE

1	Wing Flaps	FULL
2	Approach	Normal
3	Touchdown	GOOD TYRE FIRST hold aeroplane off flat tyre as long as possible with aileron control.

3.3.4. ELECTRICAL POWER SUPPLY SYSTEM MALFUNCTIONS

If fuse blows, unload the circuit and replace fuse (spares under Pilot seat). If it blows again, continue to next airport and rectify.

If main fuse fails, land at the next airport and replace. Run the engine; if the fuse again fails, rectify before continuing flight.

3.3.5. MAXIMUM GLIDE

For Minimum Rate of Sink: 57 KIAS

For Maximum Distance in Still Air: 57 KIAS

To maximise distance achieved into wind, increase glide speed by approximately 1/3 of wind velocity.

Glide performance will be improved (if time permits) by stopping propeller windmilling. This can be achieved by slowing below 50 knots.

3.3.6. RECOVERY FROM AN INADVERTENT SPIN

Aerobatic manoeuvres, including spins, are prohibited
While inadvertent spins are unlikely, should this occur, proceed as follows:

1	Throttle	IDLE
2	Ailerons	NEUTRALISE
3	Rudder	Opposite direction of spin and HOLD ON
4	Just AFTER rudder reaches the stop, move the control stick FORWARD far enough to break the stall. Full down elevator may be required at aft centre of gravity loadings to assure optimum recoveries.	
5	HOLD these control inputs until rotation stops. Premature relaxation of control inputs may extend the recovery.	

6 As rotation stops, neutralise rudder and make a smooth recovery from the resulting dive

3.4. OTHER PROCEDURES

3.4.1. CARBURETTOR HEAT

This system serves to prevent the formation of ice within the carburettor, where it primarily forms on the throttle plates in such a manner as to obstruct the airflow, with resultant eventual engine stoppage. Vaporisation of the fuel & expansion of air through the carburettor cause a cooling of the mixture, which can be as much as 15 degrees C below the temperature of the ambient air. This permits moisture in the air to condense and form ice. The first indications of icing are an RPM drop or a drop in manifold pressure. Progressive icing will cause obstruction of the carburettor, which manifests itself in the form of a rough running engine. During this time the smaller volume of air aspirated has richened the mixture. Ice can form more rapidly with partial throttle, due to the lower pressure in the carburettor. At full throttle, the danger is lessened somewhat. Therefore, carburettor heat is not to be used during takeoff or climb, also because it creates a small power loss.

IMPORTANT
During descent & approach, the carburettor heat should be used because low power settings create low pressures in the induction manifold. In case of a go-around, turn the carburettor heat OFF. Prolonged use of carburettor heat with more than 80% power applied could provoke detonation.

When using Carburettor Heat, pull knob to FULL ON.
DO NOT use partial Carburettor Heat.

Carburetor icing can occur when on the ground, particularly when the aircraft and engine have become damp overnight. Check carburetor heat during power check as normal, prior to lining up on runway close the throttle completely, if a low tick over or engine stoppage occurs ice is present so burn it off with twenty seconds of heat and then test again prior to take off.

3.4.2. IGNITION MALFUNCTION

A sudden engine roughness or misfiring is usually evidence of ignition problems. Switching from both ON to alternately switching each system OFF will identify which system is malfunctioning. Switch to the good system and proceed to the nearest airport for repairs.

3.4.3. LOW OIL PRESSURE

1	A rapid drop from normal indicated pressure to indication "0"	
	Action	Observe for smell of oil
		Open cabin air vents
		Observe for signs of spilt oil on cowls, windscreen, wing struts
		If strong smell of oil and oil appearing on airframe, reduce power to minimum to sustain level flight and proceed to nearest landing area.
		Be prepared to make an emergency landing enroute, should the engine fail.
2	Gradual reduction in oil pressure below observed normal position:	
	Action:	Observe oil temperature indications
		If oil temperature is higher than normal indications and all other engine functions are normal, proceed to the nearest landing area, land and check oil levels and external oil system for leaks
		If oil level is low, top-up to full mark on dipstick
		Allow engine to cool, start engine, run to full power and recheck oil pressure
		If oil pressure readings are normal, proceed with flight, observing both oil pressure and temperature readings.
		If, after the run-up check, the oil pressure remains low, have the engine checked by an authorised person.

Section: 4 NORMAL OPERATIONS

Table of Contents

Section: 4 NORMAL OPERATIONS

4.1. INTRODUCTION

Section 4 provides checklist and other procedures for the conduct of normal operations.

4.2. SPEEDS FOR NORMAL OPERATION

The following speeds are based on a maximum weight of 470 kg and may be used for any lesser weight.

Takeoff:	
Initial Climb Out, 1st Stage Flap	65 KIAS
Short Field Takeoff, 1st Stage Flap Speed at 50 Feet..	60 KIAS
When Clear of obstacles, retract flaps and climb at	72 KIAS
Climb, Flaps Up:	
Normal	72 KIAS
Best Rate of Climb, at low altitude	72 KIAS
Best Climb Gradient at low altitiude	68 KIAS
Note: Best Obstacle clearance gradient is with 1st Stage Flaps at 62 KIAS; but do not maintain this condition for longer than necessary as this may cause excessive engine temperatures	
Landing Approach:	
Normal Approach, Flaps Full	57 KIAS
Short Field Approach, Flaps Full.	50 KIAS
Baulked Landing	
Apply full power; allow speed to increase to	65 KIAS
Retract Flap to 1st Stage until clear of obstacles	

Then retract flap fully and continue to climb at or above	72 KIAS
Maximum Recommended Turbulent Air Penetration Speed	91 KIAS
Maximum Demonstrated Crosswind Velocity	14 Knots

4.3. CHECKLIST & PROCEDURES

4.3.1. PREFLIGHT INSPECTION

Prior to flight, the aircraft should be inspected in accordance with the following checklists and in the sequence shown in the following diagram:

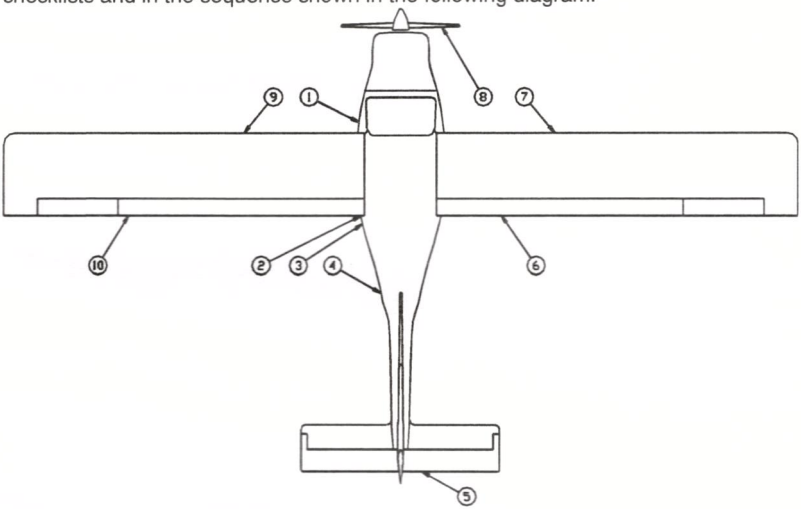

NOTE

Visually check airplane for general condition during walk-around inspection. In cold weather, remove even small accumulations of frost, ice or snow from wing, tail and control surfaces. Also, make sure that control rods and cables are free of ice and move freely.

PREFLIGHT INSPECTION CHECKLISTS

CABIN

1	Flight manual	AVAILABLE IN THE AIRCRAFT.
2	Control lock.	REMOVE Seatbelt Fastening
3	Ignition Switches	OFF
4	Master Switch	OFF
5	Fuel Shutoff Valve	ON
6	Seatbelts and Shoulder Harnesses	CHECK condition and security
7	Aileron Cable Mountings & Rod Ends	CHECK for free rotation & excessive movement, bolts secure & anchors on rear of seats secure.
8	Elevator Cable Mounting & Rod End	CHECK for free rotation & excessive movement, bolt secure & anchor on Main Beam secure.
9	Rudder & Nose Wheel Steering Push Rods & Rod Ends	CHECK for security & free movement
10	Flap Control	CHECK free movement & bolts secure.
11	Throttle & Carburettor Heat Controls	CHECK for full & free travel.
12	Brake Lever	CHECK for free travel & pressure.

FUEL

1	Fuel Quantity	CHECK level in tank through side window or inside cabin.
2	Water Check	Before first flight of the day & after each refueling, use sampler cup & drain small quantity of fuel from fuel tank sump quick-drain valve & check for water & sediment.
3	Fuel Filler Cap	CHECK secure

LEFT UNDERCARRIAGE

1	Mount Bolts	CHECK security
2	Tyre	CHECK inflation & wear.

STATIC SOURCE

1	Static Source	CHECK for blockage.

EMPENNAGE

	Tail Tie-down	DISCONNECT
	Control Surfaces	CHECK freedom of movement & security
	Rudder, Elevator & Trim Cable	CHECK freedom of movement & security

RIGHT WING - TRAILING EDGE

1	Aileron	CHECK freedom of movement & security.
2	Flap	CHECK security
3	Control Rods & Cables	CHECK aileron & flap control bolts & nuts & flap control rod for security. CHECK rod ends for freedom of rotation & excessive movement

RIGHT WING

1	Wing Tie-down	DISCONNECT.
2	Main Wheel Tyre	CHECK for proper inflation & wear or damage.
3	Wing Strut Mount Bolts (top & bottom)	CHECK for security
	CAUTION *Wing Strut attachment bolts must be free to rotate. DO NOT TIGHTEN. Ensure Nut just bears on washer.*	
4	Wing Root Mount Bolts	CHECK for security.
5	Pitot Tube	REMOVE cover & CHECK opening for blockage.

NOSE

1	Propellor & Spinner	CHECK for nicks & security
2	Cowl	REMOVE & CHECK security of engine components & systems, particularly mounts, spark plugs, wiring,fuel lines, baffles CHECK for oil leaks
3	Engine Oil Level	CHECK & top up if necessary. Clean up any spilt oil.
4	Cowl	REPLACE & CHECK clips fastened & secure & pins located
5	Front Wheel	CHECK for proper inflation & wear or damage.

LEFT WING

1	Main Wheel Tyre	CHECK for proper inflation & wear or damage.
2	Wing Strut Mount Bolts	CHECK for security.
	CAUTION Wing Strut attachment bolts must be free to rotate.DO NOT TIGHTEN. Ensure Nut just bears on washer	
3	Wing Root Mount Bolts	CHECK for security
4	Wing Tie-down	DISCONNECT

LEFT WING - TRAILING EDGE

1	Aileron	CHECK freedom of movement & security
2	Flap	CHECK security.
3	Control Rods & Cables	CHECK aileron & flap control bolts & nuts & flap control rod for security. CHECK rod ends for freedom of rotation & excessive movement

4.3.2. BEFORE STARTING ENGINE

1	Preflight Inspection	COMPLETE
2	Seatbelts & Harness	ADJUST & LOCK
3	Fuel Shutoff Valve	ON
4	Radio/Intercom	OFF
5	Brakes	TEST & SET

4.3.3. STARTING ENGINE - COLD ENGINE.

1	Carburettor Heat	COLD
2	Choke	ON
3	Throttle	CLOSED
4	Fuel Boost Pump	ON
5	Propeller Area	CLEAR
6	Master Switch	ON
7	Ignition Switches	ON
8	Start Button	PRESS
9	Note: If the engine is cranking below 300 RPM, it will not start	
	As soon as engine is running, throttle back to an idle speed of 900 - 1000 RPM	
10	Check all engine instruments for function	
11	Choke	CLOSED

IMPORTANT. Check the engine oil pressure.
If you do not see oil pressure within 10 seconds, shut down the engine immediately and determine the cause.

4.3.4. STARTING ENGINE - HOT ENGINE.

Proceed as for cold engine above, but eliminate the choke operation 2. Instead, throttle closed.

4.3.5. WARM-UP and FUNCTIONAL CHECK

Warm-up the engine with a fast idle of 1000 - 1200 RPM until the oil temperature reaches 50 degrees C. During this phase, the cooling of the cylinder head is insufficient due to reduced airflow across the cylinders. It is therefore advisable not to shorten the warm-up time by running the engine at higher RPM. The aeroplane should be pointed into wind to allow additional cooling air. As soon as the oil reaches 50 degrees C, it is possible to do the run-up.

4.3.6. BEFORE TAKEOFF

1	Brakes	CHECK
2	Cabin Doors	CLOSED & LATCHED
3	Flight Controls	FREE & CORRECT
4	Flight Instruments	SET
5	Fuel Shutoff Valve	ON
6	Elevator Trim	NEUTRAL
7	Flaps	SET FOR TAKEOFF
8	Ignition Check	Throttle to 2000 RPM Hold this engine speed for 10 seconds. Switch OFF No. 1 Ignition and watch for RPM drop. Switch ON the No. 1 Ignition & switch OFF the No. 2 Ignition watching for the RPM drop. RPM drop should not exceed 100 RPM on either system. If drop is excessive, shut down & determine the reason. Switch No. 2 Ignition ON.
	NOTE During the check with one system only, the inactive sparkplugs may tend to load up slightly. To clean plugs, run the engine with both ignitions for a few seconds, then recheck the second system.	
9	Power Check	Throttle to 2850 RPM

		Open the throttle fully & slowly to check the maximum RPM being produced. Wind conditions may effect, but as an average 2850 RPM should be seen.

NOTE

If the RPM is found to be more than 150 RPM lower than normal, the engine should be examined to determine the reason.

10	Idle Check	Throttle back to idle position & check that the engine runs smoothly. With too low an idle speed, or rough running, the cause must be located & corrected to avoid the potential for an in-flight stoppage
11	Carburettor Heat Check	Throttle up to 2000 RPM Pull out the Carburettor Heat Control & look for an RPM drop. Return the Carburettor Heat Control to the Full IN or cold position.

4.3.7. TAKEOFF

Normal Takeoff

1	Wing Flaps	1st Stage
2	Carburettor Heat	COLD
3	Throttle	FULL.....OPEN
4	Elevator Control	LIFT NOSE WHEEL AT 25-30 KIAS and wait for aircraft to fly itself off (at around 55 KIAS)
5	Climb Speed	65 KIAS until Flaps retracted, then 72 KIAS.
6	At top of Climb, Fuel Boost Pump	OFF

Short Field Takeoff

1	Wing Flaps	1st Stage
2	Carburettor Heat	COLD
3	Brakes	APPLY
4	Throttle	FULL OPEN
5	Brakes	RELEASE
6	Elevator Control	SLIGHTLY TAIL LOW
7	Climb Speed	60 KIAS (until all obstacles are cleared).
8	Wing Flaps	RETRACT slowly increasing speed to 72 KIAS

4.3.8. ENROUTE CLIMB

1	Airspeed	72 KIAS
2	Throttle	FULL OPEN

NOTE

During climb, monitor the cylinder head & oil temperatures to avoid exceeding their limits. The aircraft has been tested to ensure adequate cooling in climb, therefore any excessive readings may indicate a malfunction. Should this occur, decrease the rate of climb in order to increase the airspeed for improved cooling.

4.3.9. CRUISE

1	Power	Not above maximum continuous power of 3150 RPM. 2800-2900 Normal.
2	Elevator Trim	ADJUST.

4.3.10. BEFORE LANDING

1	Seatbelts & Harnesses	ADJUST & LOCK
2	Carburettor Heat	as required
3	Fuel Boost Pump	ON

4.3.11. LANDING

Normal Landing

1	Airspeed	57 KIAS
2	Wing Flaps	FULL DOWN (below 70 KIAS)
3	Touchdown	MAIN WHEELS FIRST
4	Landing Roll	LOWER NOSE WHEEL GENTLY
5	Braking	MINIMUM REQUIRED

Short Field Landing

1	Airspeed	55 KIAS
2	Wing Flaps	FULL DOWN (below 70 KIAS)
3	Power	REDUCE to idle as obstacle is cleared
4	Touchdown	MAIN WHEELS FIRST
5	Brakes	APPLY AS REQUIRED
6	Wing Flaps	RETRACT when convenient for better braking

Baulked Landing

1	Throttle	FULL OPEN
2	Carburettor Heat	COLD
3	Wing Flaps	RETRACT to 1/2 DOWN
4	Airspeed	65 KIAS until clear of obstacles
5	Wing Flaps	RETRACT TO 1st STAGE until clear of obstacles then retract fully and continue to climb at or above 72 KIAS

4.3.12. AFTER LANDING

1	Wing Flaps	UP
2	Fuel Boost Pump	OFF
3	Carburettor Heat	Full IN or Cold

4.3.13. SECURING AIRPLANE

1	Radio/Intercom	OFF
2	Ignition Switches	OFF
3	Master Switch	OFF
4	Controls	LOCK with seatbelt
5	Fuel	OFF

4.4. OTHER PROCEDURES

4.4.1. FUELING

SAFETY WARNINGS

* Never prepare fuel in an area that is enclosed or where fumes could reach ignition point. DO NOT SMOKE or allow open flames or sparks in the vicinity. Never add fuel while the engine is running.
* Never refuel an aircraft if fuel could be spilled on hot engine components (this should not be a problem with the JABIRU due to the location of the fuel tank and filler).
* Use only approved fuel containers and never transport fuel in an unsafe manner.
* Always check for fuel contamination. Contamination is a major cause of engine failure. The best place to avoid contamination is at the source. Once your fuel is in the container a very hazardous potential exists. Use a clean safety approved storage container. Do not overfill the container - allow for expansion.
* The engine is designed for use with **aviation gasolines only**. Be sure to use products of at least the standard shown in Section 1.
* Always earth the aircraft through the Earthing Point provided at the fuel filler before removing the fuel cap.
* Before first flight of the day, and after each refueling, use a sampler cup and drain a small quantity of fuel from the fuel tank sump quick drain valve -check for water, sediment and contamination.

FUEL SYSTEM WATER DRAINAGE

Where there is a suspicion that water may be present in the fuel tank, the following procedure is to be followed.
* Lower the empennage of the aircraft to near the ground and rock the aircraft up and down and side to side at the same time. Repeat up to 10(ten) times.
* Check fuel tank sump by sampling fuel.
* If water is present, repeat the entire procedure until you are certain that no water remains in the tank or fuel system.

- Where doubt still exists the aircraft fuel system should be examined by a qualified person and fully stripped and drained before flight.

FILLING THE TANK

When fueling from a pump to a full tank condition lift the nozzle out slightly for the last five litres and slow the speed down as you can create a siphon motion that will dump the last five litres out until the vent is above the fuel level. If this happens quickly replace the fuel cap to break the siphon.

4.4.2 TAXIING

When taxiing, it is important that speed and use of brakes be kept to a minimum and that all controls be utilized (see Taxiing Diagram, Figure 4.1) to maintain directional control and balance.

The carburettor heat control knob should be pushed full IN (that is, NOT selected) during all ground operations unless heat is absolutely necessary.

Taxiing over loose gravel or cinders should be done at low engine speed to avoid abrasion and stone damage to the propellor.

DO NOT accelerate over loose gravel or cinders or propeller damage will result.

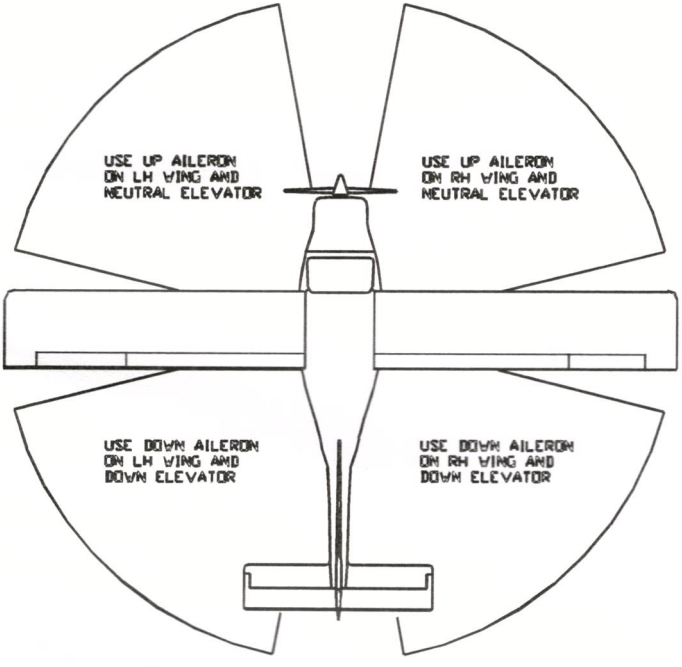

Figure 4.1 - Taxiing Diagram

4.4.3. PROPELLOR CARE

Full throttle runups over loose gravel are especially harmful to propellor tips. When takeoffs must be made over a gravel surface, it is very important that the throttle is advanced slowly. This allows the airplane to start rolling before high RPM is developed, and the gravel will be blown behind the propellor rather than pulled into it. When unavoidable small nicks appear in the propellor, they should be immediately corrected.

4.4.4. CROSSWIND TAKEOFF

Takeoffs into strong crosswinds are normally performed with the minimum flap setting necessary for the field length, to minimize the drift angle immediately after takeoff. With the ailerons partially deflected into the wind, the airplane is accelerated to a speed slightly higher than normal, and then pulled off positively and smoothly to prevent possible settling back to the runway while drifting. When clear of the ground, make a coordinated turn into the wind to correct for drift.

4.4.5. CRUISE

Normal cruising is performed between 75 % and 90 % power. Continuous cruise should not be above 3150 RPM. Flights should be planned at 15 litres per hour with 45 minutes reserve, with appropriate allowances for wind conditions which will assist in determining the most favourable altitude and power setting for a given trip.

4.4.6. CROSSWIND LANDING

The limiting crosswind velocity of 14 knots has been demonstrated at FULL Flap. However, in strong crosswind conditions use the minimum flap consistent with the strip length available.

Use the Wing Low technique right through to touchdown and land on Mains first.

4.4.7. BAULKED LANDING

In a baulked landing (go-around) climb, the wing flap setting should be reduced to the First Stage immediately after full power is applied and the aircraft has accelerated to a safe climb speed. Upon reaching a safe airspeed, the flaps should be slowly retracted to the full up position, whilst allowing the aircraft to accelerate to the best climb speed.

4.4.8. NOISE ABATEMENT

Increased emphasis on improving the quality of our environment requires renewed effort on the part of all pilots to minimize the effect of airplane noise on the public.

As pilots, we can demonstrate our concern for environmental improvement by application of the following procedures:

1	At altitudes under 2000 feet, avoid flying in close proximity to houses or over parks and recreational areas
2	During approach to or departure from an airport, climb after takeoff and descent for landing should be made so as to avoid prolonged flight at low altitude near noise sensitive areas.

4.4.9. VISIBLE MOISTURE

Where flights are likely to include operations in visible moisture or rain, the use of RAIN-X window treatment is recommended. RAIN-X is available from JABIRU as Part No. PM0900.

4.4.10. STOPPING THE ENGINE

To stop the engine, turn OFF the ignition switches and turn OFF the Master Switch. Carburettor Heat should be returned to the Full IN or cold position.

4.4.11. STARTING THE ENGINE FROM EXTERNAL POWER SOURCE

Where it is necessary to start the engine from an external power source:

	Remove Top cowl
	Place jumper leads directly on battery terminals, ensuring positive to positive and negative to negative
	Start as for normal operation
	Stop engine, remove jumper leads,refit cowl

WARNING

Wheels must be chocked.
Ensure propeller is clear.
Ensure qualified person is in the operator seat.
Do not attempt to refit cowl with propeller running.

Section: 5 PERFORMANCE

Table of Contents

Section: 5 PERFORMANCE

5.1. STALLING

5.1.1. STALL SPEEDS

(In KIAS and power off condition)

Flap Setting	Zero	Stage 1 Takeoff	Stage 2 Landing
Maximum Takeoff & Landing Weight	46	44	40

5.1.2. NATURE OF STALL WARNING

Configuration		Stall Warning
Power Off	Clean Flap Stage 1 Flap Stage 2	Audible Warning horn 5 – 8 knots before stall.
Power Full	Clean Flap Stage 1 Flap Stage 2	Audible Warning horn 5 – 8 knots before stall

5.2. TAKEOFF & LANDING DISTANCES

Takeoff safety speed is 1.3 Vsi	65 KIAS
Landing Approach speed (Full Flap)	57 KIAS

The unfactored, sea-level takeoff distance to 50' at NIL wind or slope, on a short dry grass surface, is 412 metres. The sea-level take-off strip length exceeds the landing strip length.

Takeoff and Landing Distance is therefore 412 metres times 1.4 = 577 metres. This distance is established using the normal technique described in paragraph 4.3.7.

This distance must be increased by a distance increment of 115 metres for each one thousand feet (1000') of pressure altitude.

5.3. MAXIMUM CROSSWIND FOR TAKEOFF & LANDING

14 knots.

Section: 6

WEIGHT, BALANCE & EQUIPMENT LIST

For Aircraft Fitted with 65litre Fuel Tank P/No 4217092

Table of Contents

Section: 6 WEIGHT, BALANCE & EQUIPMENT LIST

6.1. Introduction

This section contains basic weight and center of gravity information necessary to ensure correct loading. It records the weight and balance of the empty aircraft, together with the Aircraft Weight Limitations and a Loading System.

These documents, separately approved by the Civil Aviation Safety Authority or an Aircraft Weight Control Officer, are to be carried in the Flight Manual at all times.

6.2. Aircraft Weight Record

Registration No.	
Aircraft Model	
Serial Number	
Issue	
Date	
Expiry Date	

Aircraft	Empty
Weight (kg)	
Arm (mm aft of datum)	
Moment (kg mm)	

Notes:

1 empty aircraft includes Full Engine oil, unusable fuel (0.5 kg), and kg of fixed ballast in the rear ventral fin.

…… ……

Weight Control Officer Date.

6.3. Loading System

6.3.1. General

Previous Issues of Jabiru Flight Manuals provided a simplified loading system that used a set of loading rules. The system was intended as a ready reference type of approach, but involved a lot of conservatism. The conservatism has proved restrictive for the UL-450 model aircraft, and because of this the simplified loading system has been withdrawn. Acceptable Weight and Balance conditions must be verified using the Load and Trim System.

6.3.2. Load and Trim System

The load and trim system is provided in the trim chart, which is shown at Figure 6.1. The chart, is a graphic representation of the weight and balance calculations for the aircraft.

The aircraft is loaded correctly, only if **both** the **Zero Fuel Weight** and the **Take-Off Weight** cases fall inside the area in the defined envelope.

The Chart is used as follows:

1. Enter the chart at the top by taking the **Basic Aircraft Moment** taken from Page 6/2, dividing by 1000 and locating this value on the top axis that is labelled "Index Units/1000 (kg.mm)..
2. Drop a vertical line down until it intersects with a sloping line in **the "Weigh on Seats**" Box.
3. Move horizontally across to the right one line for each 10 kg of Pilot, Passenger, and/or Baggage Weight that is loaded on the seats.

   (i.e. move 7 and ¼lines for a crew weight of 75-kg.)
4. Drop a vertical line down from this point in the Weight on Seats Box, until it intersects with a sloping line in the **"Weight of Baggage"** Box.
5. Move horizontally across to the right one line for each 5 kg of Baggage Weight that is loaded on or beside the fuel tank.

   (i.e. move 2 lines for a baggage weight of 10 kg)
6. Drop a vertical line down from this point in the "**Baggage Weight Box**", until it intersects with a sloping line in the "**Quantity of Fuel Box**". This defines the **Zero Fuel Condition**

6.4. Weight Limits

Maximum takeoff weight	=	470 kg (1036 lb)
Maximum landing weight	=	470 kg (1036 lb)

6.5. Center of Gravity Limits

6.5.1. Operational Aircraft Center of Gravity Details

Forward Limit:	1601 mm aft of datum up to & including 420 kg 1661 mm aft of datum @ 470 kg Variation is linear between 420, and 470 kg
Aft Limit	1695 mm aft of datum at all weights
Datum	1403 mm forward of the Leading Edge of Right Hand Wing.
Levelling Means	
Longitudinal	Spirit Level placed on the lower doorsill on the left-hand side of the fuselage.
Lateral	Spirit Level placed across the fuselage forward of the firewall on cowl location rubbers.
Crew Station	1688mm aft of datum
Fuel Station	2280mm aft of datum
Engine Oil Station	430 mm aft of datum

6.6. Aircraft Equipment List

Items listed in the following table were fitted to the aircraft at manufacture and were included in the aircraft basic weight.

Generic Item	Specific Item Description
Engine	Jabiru 2200A
Propeller	Jabiru Fixed Pitch Wooden
Flight Instruments	
Airspeed Indicator	
Altimeter	
Slip/Skid	
Compass	
Vertical Speed Indicator	
Stall Warning System	
Engine Instruments	
Tachometer	
Oil Pressure Gauge	
Oil Temperature Gauge	
Cylinder Head Temperature Gauge	
Hour-meter	
Communications Equipment	
VHF Transceiver	
Headsets x 2	
Intercom	
Headphones	
Miscellaneous Equipment	
Seat Cushions	
Door Map Pockets	
Sound Curtain	
Seat Belts	
Electrical Storage Battery	
Fixed ballast	

7 Move horizontally across to the right one line for each 10 liters of Fuel that will be in the fuel tank at Take-Off. This defines the Take-Off Condition

(i.e. move 5 lines for 50-liters of fuel)

8 Calculate the Zero Fuel Weigth for the Aircraft, and mark a line across the "**Aircraft Trim Conditions** Box"

9 Calculate the Take-Off Weight for the Aircraft, and mark a line across the "**Aircraft Trim Conditions** Box"

10 Drop a vertical line from the Zero Fuel Condition in the "Quantity of Fuel" Box to intesect with the Zero Fuel Weight in the Aircraft Trim Box. This defines the Zero Fuel Trim Condition.

11 Drop a vertical line from the Take-Off Fuel Condition in the "Quantity of Fuel" Box to intesect with the Take-Off Weight in the Aircraft Trim Box. This defines the Take-Off Trim Condition.

12 The aircraft is correctly loading if the Zero Fuel Trim Condition, and the Take-Off Trim Condition, lie within the envelope that is defined in the Aircraft Trim Condition Box.

13 If the requirements of Line 12 are not met, change the load distribution and restart the trim calculations.

To calculate the weight of fuel in kg, multiply the amount of fuel in litres by 0.72.

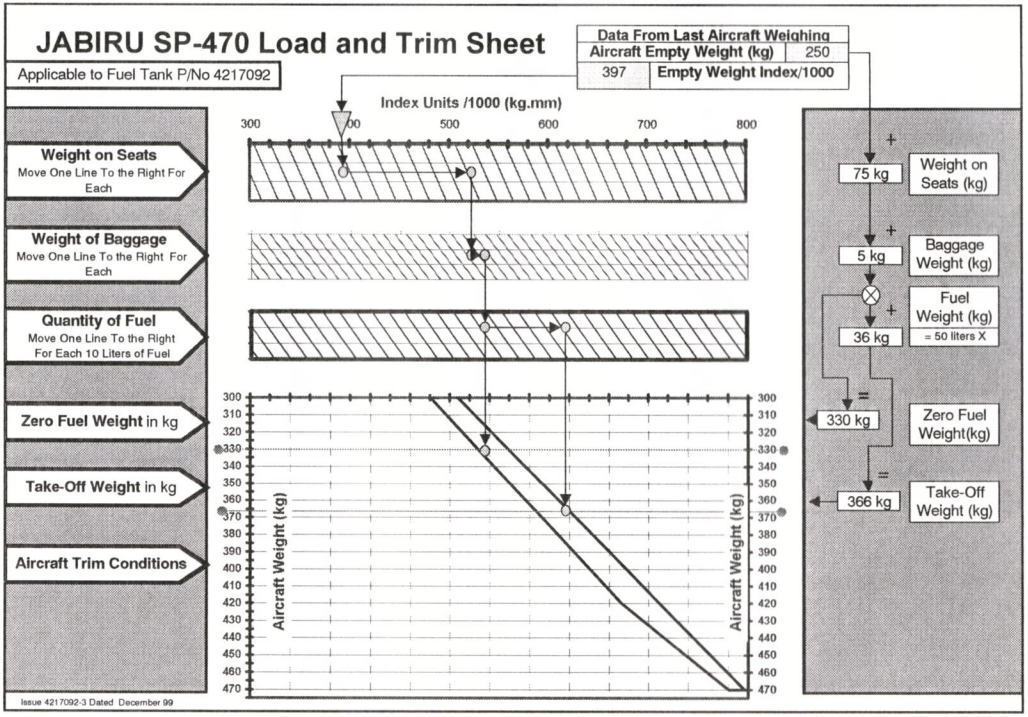

Figure 6-1 Aircraft Load and Trim System