The RANS S-6ES CD manual is designed to be printable on 3-hole punched paper on your home printer. If you have the pre-printed manual follow the directions for rotation below.

If you desire to NOT print the pages, you may use the features available with ADOBE Reader to rotate the pages on your computer screen.

After the manual pages are printed, rotate the Parts Drawing page 180° to face the Parts List page. See the diagram below.

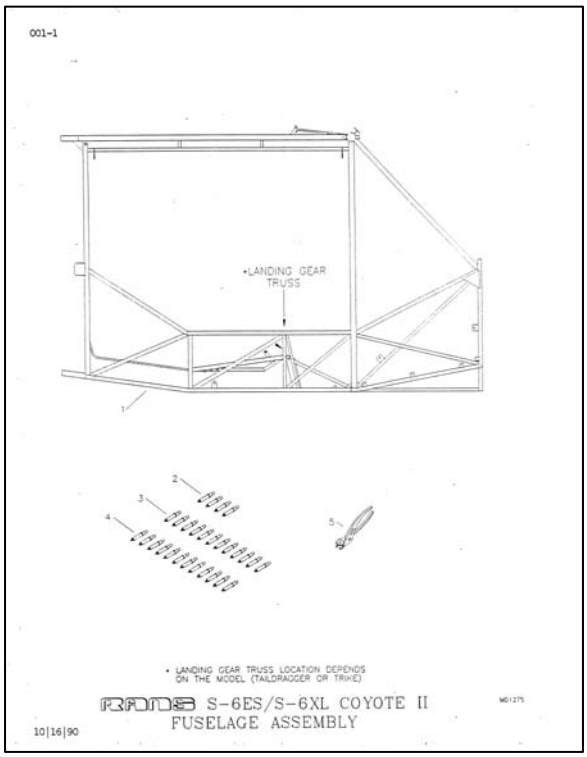

Parts Drawing page

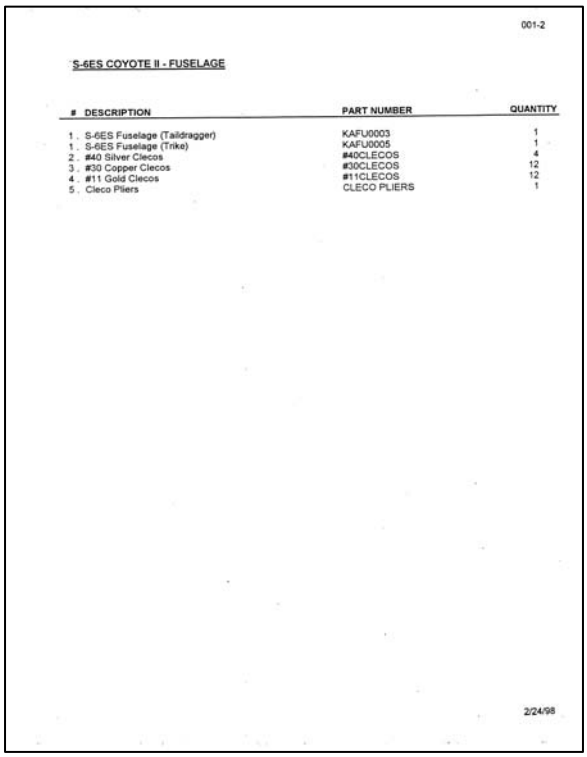

001-2

S-6ES COYOTE II - FUSELAGE

#	DESCRIPTION	PART NUMBER	QUANTITY
1.	S-6ES Fuselage (Taildragger)	KAFU0003	1
1.	S-6ES Fuselage (Trike)	KAFU0005	1
2.	#40 Silver Clecos	#40CLECOS	4
3.	#30 Copper Clecos	#30CLECOS	12
4.	#11 Gold Clecos	#11CLECOS	12
5.	Cleco Pliers	CLECO PLIERS	1

2/24/98

Parts List page

S-6ES COYOTE II - GENERAL INFORMATION

#	DESCRIPTION	PART NUMBER	QUANTITY
1.	Flight Log	FLIGHT LOG	1
2.	Maintenance Log Book	MAINTENANCE LOG	1
3.	Assembly Manual	ASSEMBLY MANUAL(6ES)	1
4.	Experimental Decal Sheets	EXPER-DECAL	1
5.	Range Decals	RANGE DECAL	1
6.	Raw Stock Kit	KAAC0005	1
6.	3/4" x .058 x 16" Anodized Aluminum Tuibing *	KAAC0005-1	1
6.	1/4" x .028 x 28" Anodized Aluminum Tubing *	KAAC0005-2	1
6.	3/8" x .058 x 66" Anodized Aluminum Tubing *	KAAC0005-3	1
6.	1/2" x .035 x 12' Anodized Aluminum Tubing *	KAAC0005-4	5
6.	7/8" x .058 x 40" Anodized Aluminum Tubing *	KAAC0005-6	1
6.	1/2" x .020 x 48" Alclad Aluminum Sheet *	KAAC0005-7	2
6.	1/2" x .032 x 18" Aluminum Sheet *	KAAC0005-8	1
6.	1/2" x .058 x 6" Anodized Aluminum Tubing *	KAAC0005-9	1
6.	3/8" x .095 x 8" Anodized Aluminum Tubing *	KAAC0005-10	1
7.	Safety Wire	SAFETY WIRE	1
8.	Warning Label	KPPL0001	1

*Supplied in Raw Stock Kit.

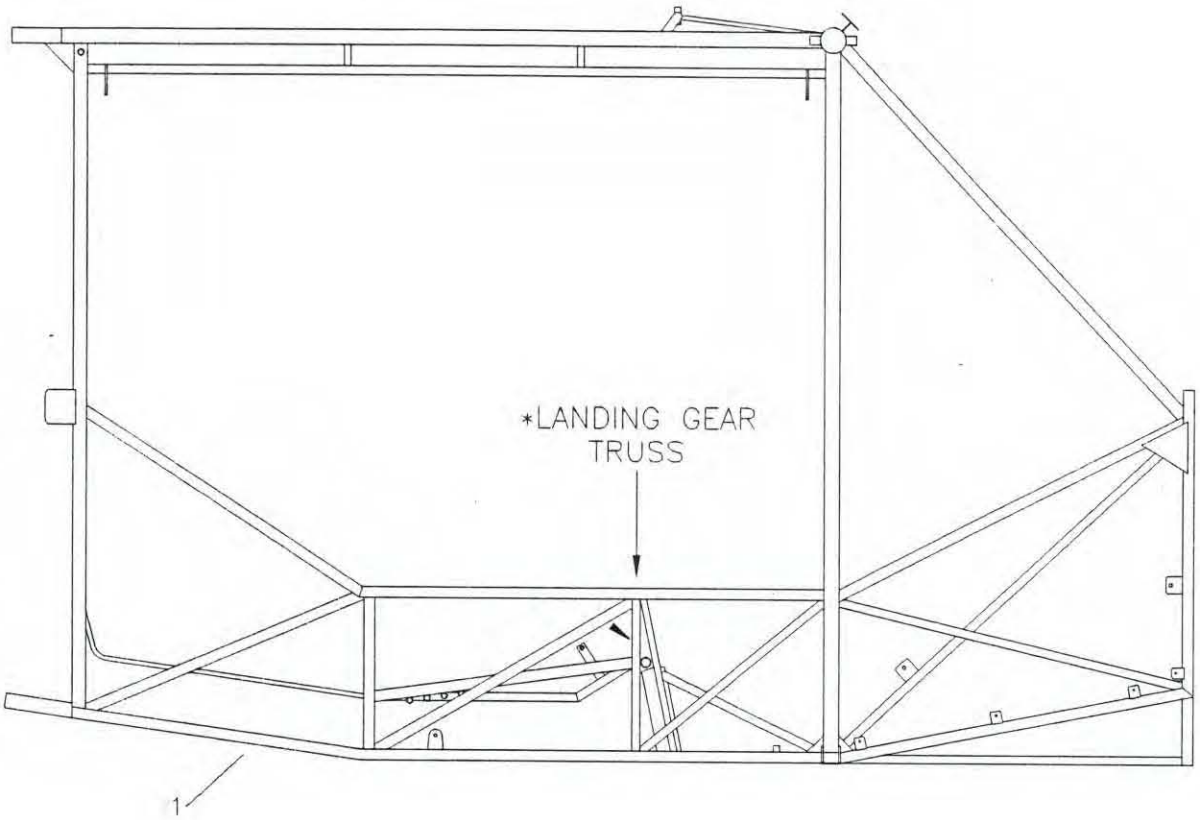

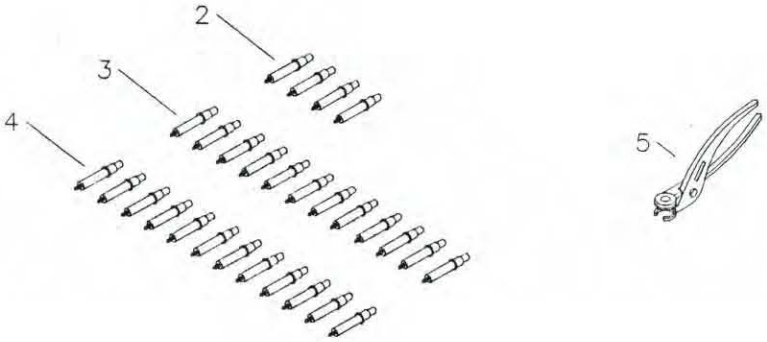

* LANDING GEAR TRUSS LOCATION DEPENDS
ON THE MODEL (TAILDRAGGER OR TRIKE)

RANS S-6ES/S-6XL COYOTE II
FUSELAGE ASSEMBLY

MD1275

10|16|90

S-6ES COYOTE II - FUSELAGE

#	DESCRIPTION	PART NUMBER	QUANTITY
1 .	S-6ES Fuselage (Taildragger)	KAFU0003	1
1 .	S-6ES Fuselage (Trike)	KAFU0005	1
2 .	#40 Silver Clecos	#40CLECOS	4
3 .	#30 Copper Clecos	#30CLECOS	12
4 .	#11 Gold Clecos	#11CLECOS	12
5 .	Cleco Pliers	CLECO PLIERS	1

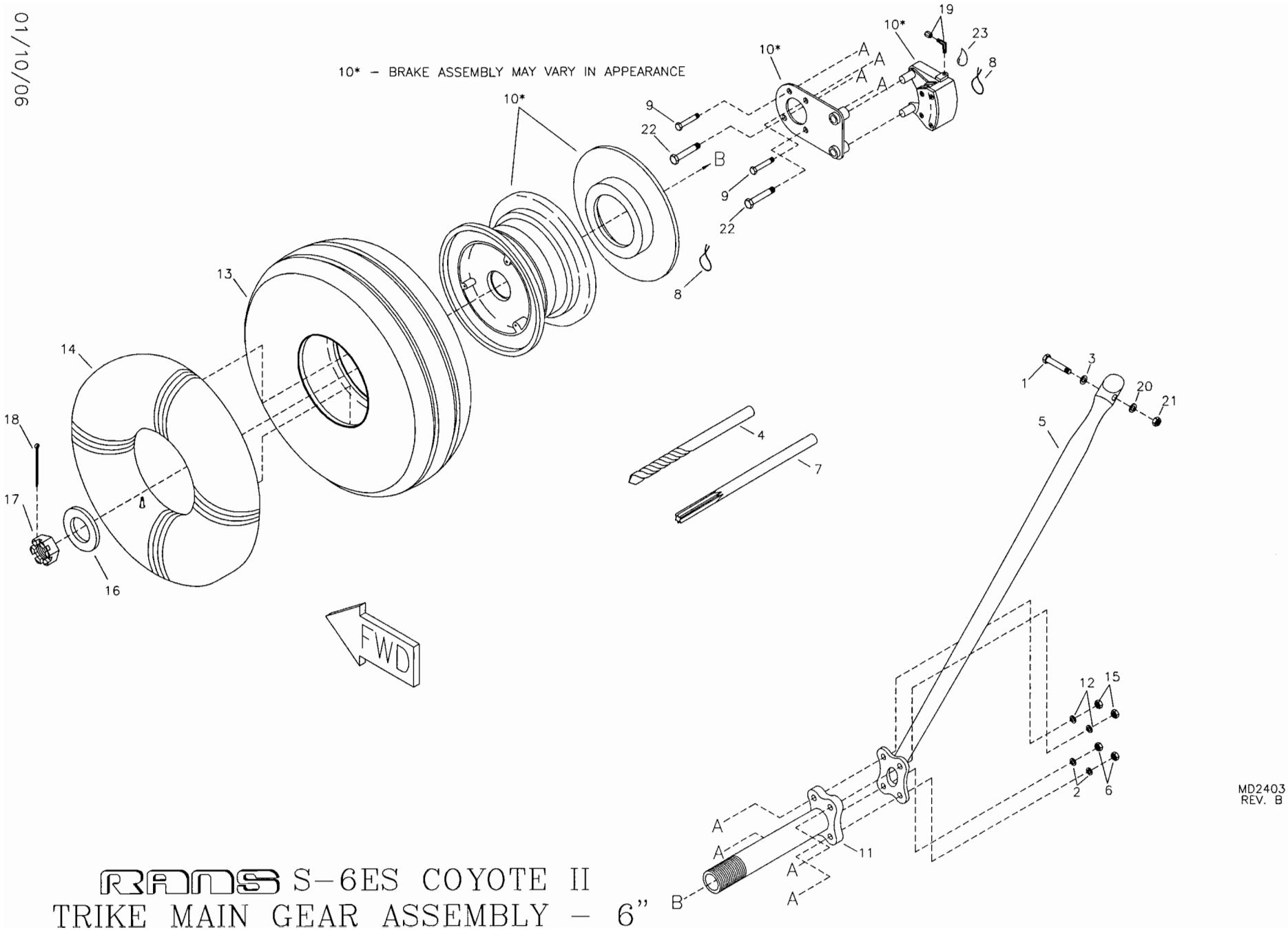

RANS S-6ES COYOTE II
TRIKE MAIN GEAR ASSEMBLY - 6"

S-6ES COYOTE II - TRIKE MAIN GEAR ASSEMBLY - 6"

#	DESCRIPTION	PART NUMBER	QUANTITY
1.	1/4" Bolt - Close Tolerance	NAS6604-23	2
2.	3/8" Thick Washer	AN960-616	4
3.	1/4" Thin Washer	AN960-416L	2
4.	6.2mm Drill Bit	KPAC0205	1
5.	Gear Leg	KPMG0197	2
6.	3/8" Tensile Nut	AN365-624A	4
7.	Reamer - 0.249"	KPAC0204	1
8.	Safety Wire **	-----	0
9.	5/16" Bolt	AN5-16A	4
10.	Hydraulic Brake Assembly, 6"	KSBS0030	2
11.	Axle *	-----	0
12.	5/16" Thin Washer	AN960-516L	4
13.	Tire, 6"	KSMG0013	2
14.	Tire Tube, 6"	KSMG0016	2
15.	5/16" Tensile Nut	AN365-524A	4
16.	Washer *	-----	0
17.	Castle Nut *	-----	0
18.	Cotter Pin *	-----	0
19.	90 Fitting	KSBS0001	2
20.	1/4" Thick Washer	AN960-416	2
21.	1/4" Shear Nut	AN364-428A	2
22.	3/8" Bolt	AN6-17A	4
23.	Thread Sealant **	-----	0

*Supplied pre-assembled to KSBS0030.
**Builder supplied.

05/23/2008

002A-01

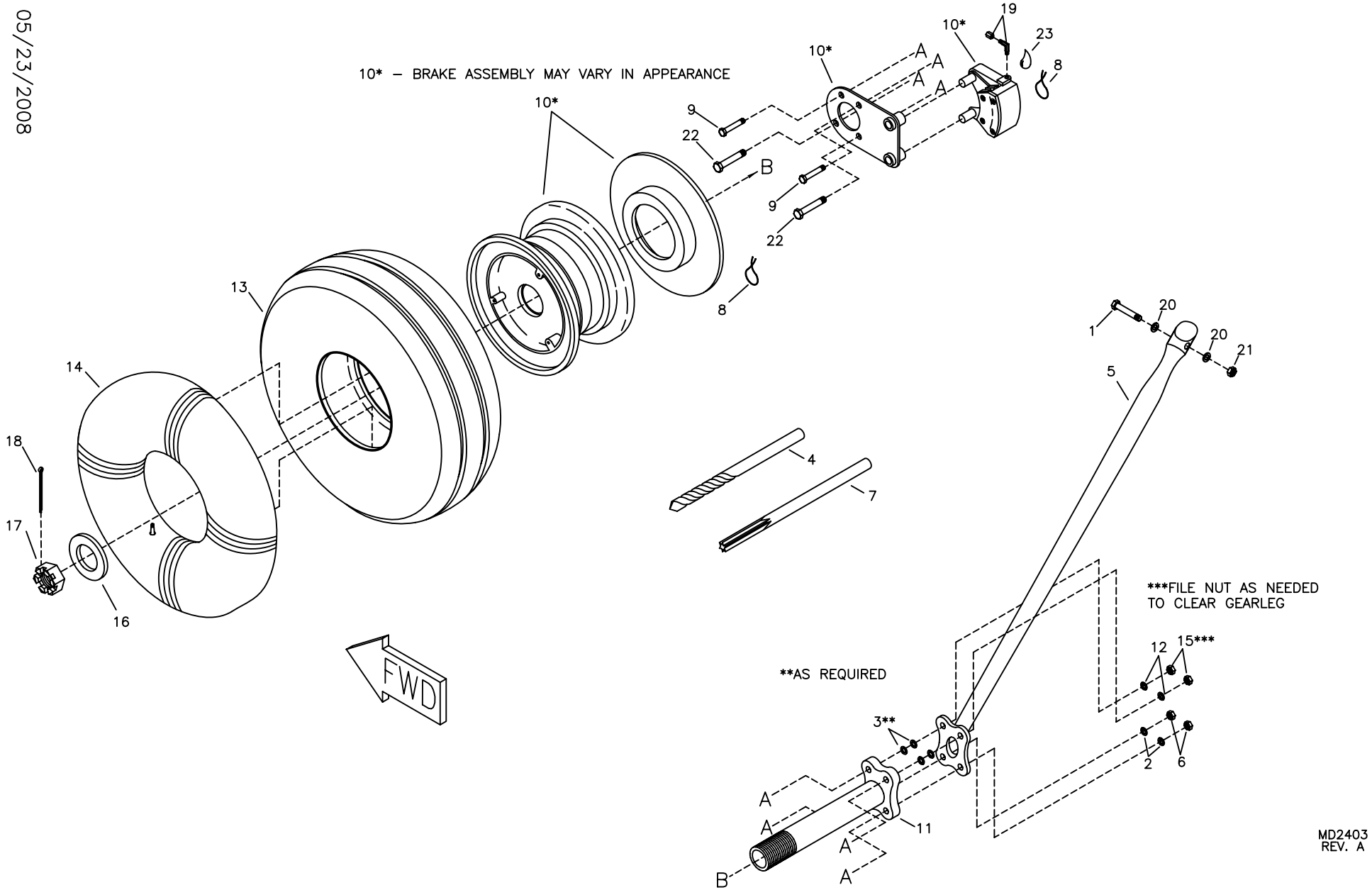

RANS S-6ES COYOTE II
TAILDRAGGER MAIN GEAR ASSEMBLY – 6”

S-6ES COYOTE II - TAILDRAGGER MAIN GEAR ASSEMBLY - 6"

#	DESCRIPTION	PART NUMBER	QUANTITY
1 .	1/4" Bolt - Close Tolerance	NAS6604-23	2
2 .	3/8" Thick Washer	AN960-616	4
3 .	5/16" Thick Washer	AN960-516	8
4 .	6.2mm Drill Bit	KPAC0205	1
5 .	Gear Leg	KAMG0013	2
6 .	3/8" Tensile Nut	AN365-624A	4
7 .	Reamer - 0.249"	KPAC0204	1
8 .	Safety Wire **	-----	0
9 .	5/16" Bolt	AN5-16A	4
10 .	Hydraulic Brake Assembly, 6"	KSBS0030	2
11 .	Axle *	-----	0
12 .	5/16" Thin Washer	AN960-516L	4
13 .	Tire, 6"	KSMG0013	2
14 .	Tire Tube, 6"	KSMG0016	2
15 .	5/16" Tensile Nut	AN365-524A	4
16 .	Washer *	-----	0
17 .	Castle Nut *	-----	0
18 .	Cotter Pin *	-----	0
19 .	90 Fitting	KSBS0001	2
20 .	1/4" Thick Washer	AN960-416	4
21 .	1/4" Shear Nut	AN364-428A	2
22 .	3/8" Bolt	AN6-17A	4
23 .	Thread Sealant **	-----	0

NOTE: Tundra tire options inflate to 9 bls maximum.
**Supplied pre-assembled to KSBS0030.
**Builder Supplied.

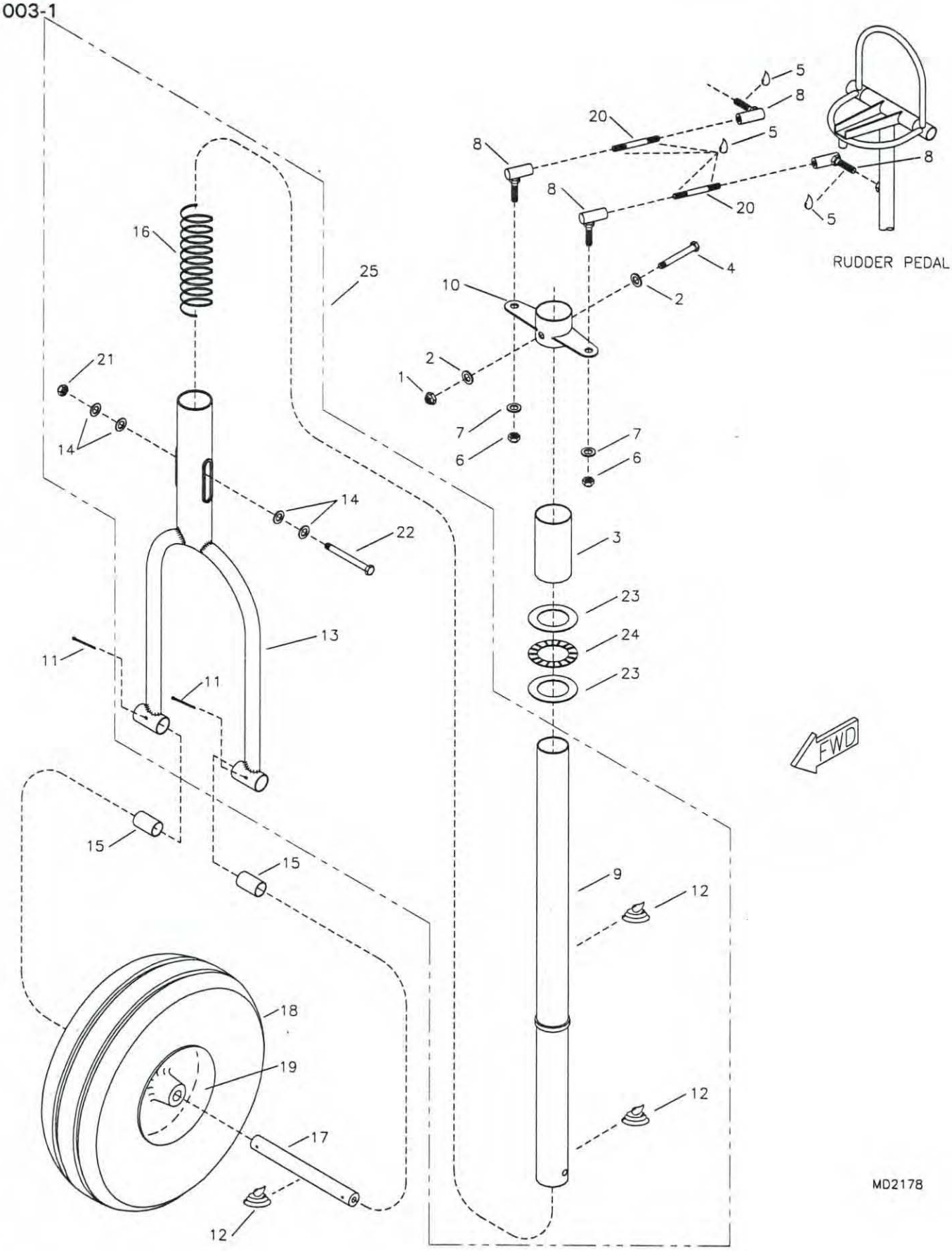

RANS S-6ES COYOTE II
NOSE GEAR ASSEMBLY

S-6ES COYOTE II - NOSE GEAR

#	DESCRIPTION	PART NUMBER	QUANTITY
1.	3/16" Shear Nut	AN364-1032A	1
2.	3/16" Thin Washer	AN960-10L	2
3.	Stop Ring	KPNG0027	1
4.	3/16" Bolt	AN3-20A	1
5.	Loctite Blue	LOC-TITE	0
6.	1/4" Shear Nut	AN364-428A	2
7.	1/4" Thin Washer	AN960-416L	2
8.	Steering Rod Linkage	NG-SL	4
9.	Nose Gear Strut *	KPNG0076	0
10.	Steer Horn	KPNG0020	1
11.	Large Cotter Pin	MS24665-285	2
12.	Grease	-----	0
13.	Fork *	KPNG0073	0
14.	1/4" Plastic Washer *	PW-4	0
15.	Aluminum Bushing, 3/4" x .058 x X **	KAAC0005-1	0
16.	Spring *	4259	0
17.	Nose Gear Axle	KPNG0074	1
18.	Aero-Trainer Tire, 5"	KSMG0005	1
18.	Aero-Trainer Tire Tube, 5"	KSMG0007	1
19.	5" Hegar Nosewheel Rim Kit	LG-NW-RIM-5	1
19.	Hegar Nosewheel Hub Kit	LG-NW-HUB	1
20.	Steer Rod, 2 7/8"	KPNG0017	2
21.	1/4" Shear Nut *	AN364-428A	0
22.	1/4" Bolt *	AN4-24A	0
23.	Bearing Washer	TRA2435	2
24.	Thrust Bearing	NTA2435	1
25.	Nose Gear Strut/Fork Assembly	KANG0014	1

*Supplied with Strut Assembly (KANG0014).
**Builder must fabricate from raw stock.

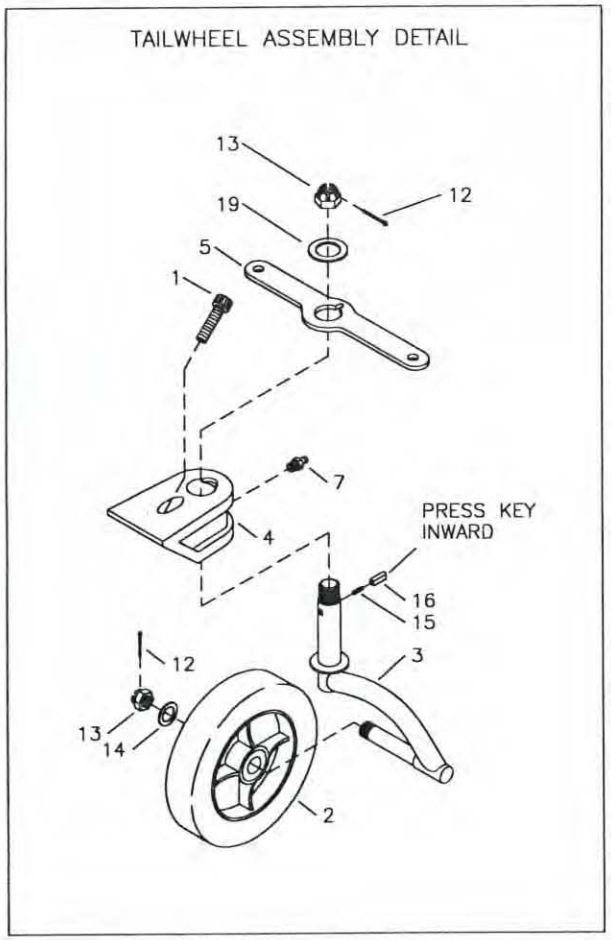

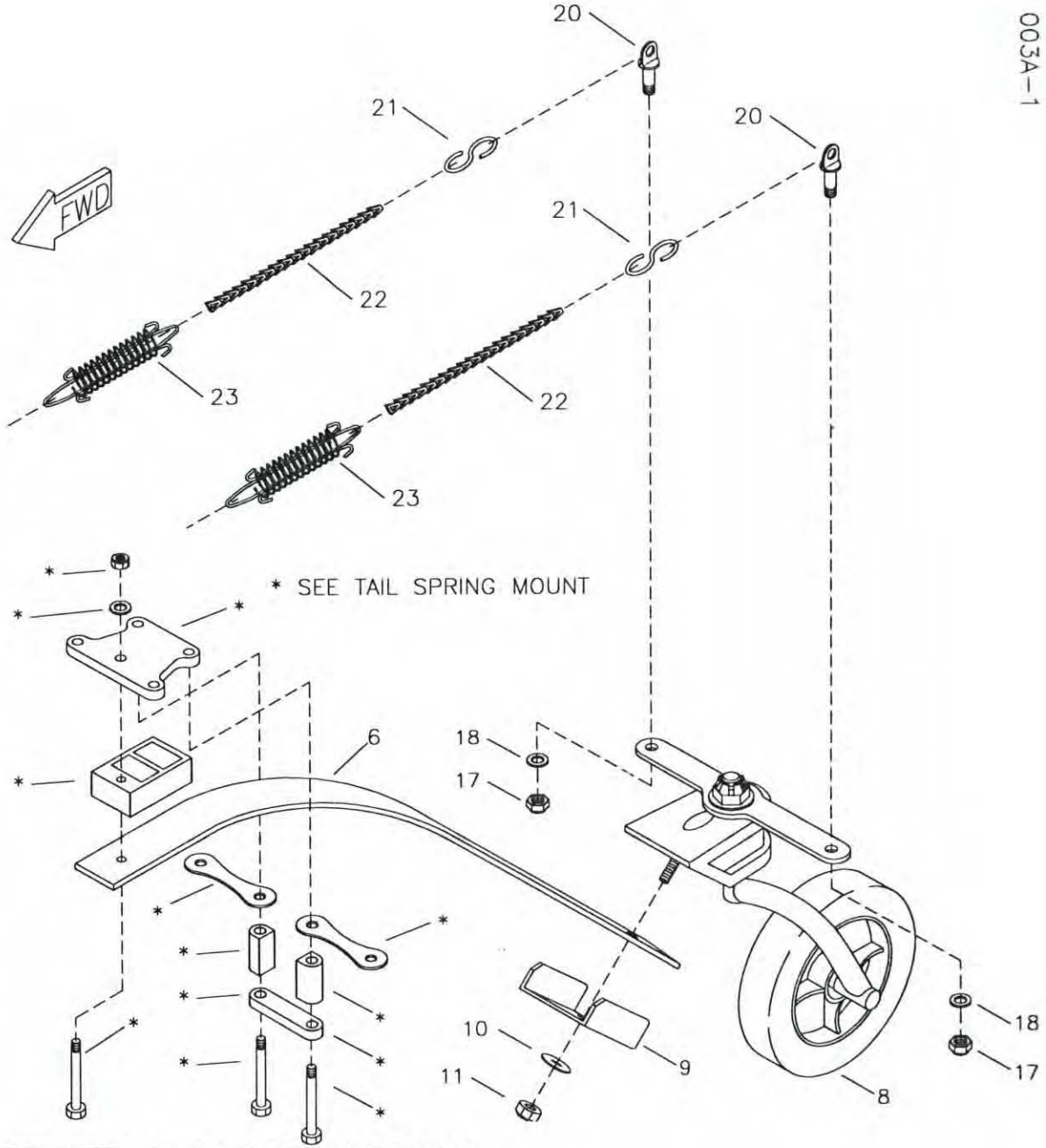

RANS S-6ES COYOTE II
TAILWHEEL ASSEMBLY

S-6ES COYOTE II - TAILWHEEL

#	DESCRIPTION	PART NUMBER	QUANTITY
1.	Socket Head Cap Screw *	KSHW0058	1
2.	Tailwheel *	KSTG0002	1
3.	Tailwheel - Fork *	KPTG0005	1
4.	Tailwheel - Swivel Block *	KPTG0003	1
5.	Tailwheel - Steer Horn *	KPTG0004	1
6.	Tail Spring	KPTG0033	1
7.	Grease Fitting *	MS5003-1	1
8.	Tailwheel Assembly	KATG0002	1
9.	Tailwheel - Spring Mount Channel *	KPTG0007	1
10.	3/8" Thick Washer *	AN960-616	1
11.	3/8" Tensile Loc Nut *	AN365-624A	1
12.	Large Cotter Pin *	MS24665-287	2
13.	1/2" Castle Nut *	AN320-8	2
14.	1/2" Thick Washer *	AN960-816	1
15.	Tailwheel - Tension Spring *	KSTG0003	1
16.	Tailwheel - Tension Key *	KPTG0006	1
17.	1/4" Shear Nut	AN364-428A	2
18.	1/4" Thick Washer	AN960-416	2
19.	Washer *	KSHW0059	1
20.	1/4" Eyebolt	AN43B-5A	2
21.	"S" Hook	TW-SHOOK	2
22.	Chain	TW-C	2
23.	Steer Springs	TW-S-SPR	2

*Supplied in tailwheel assembly.

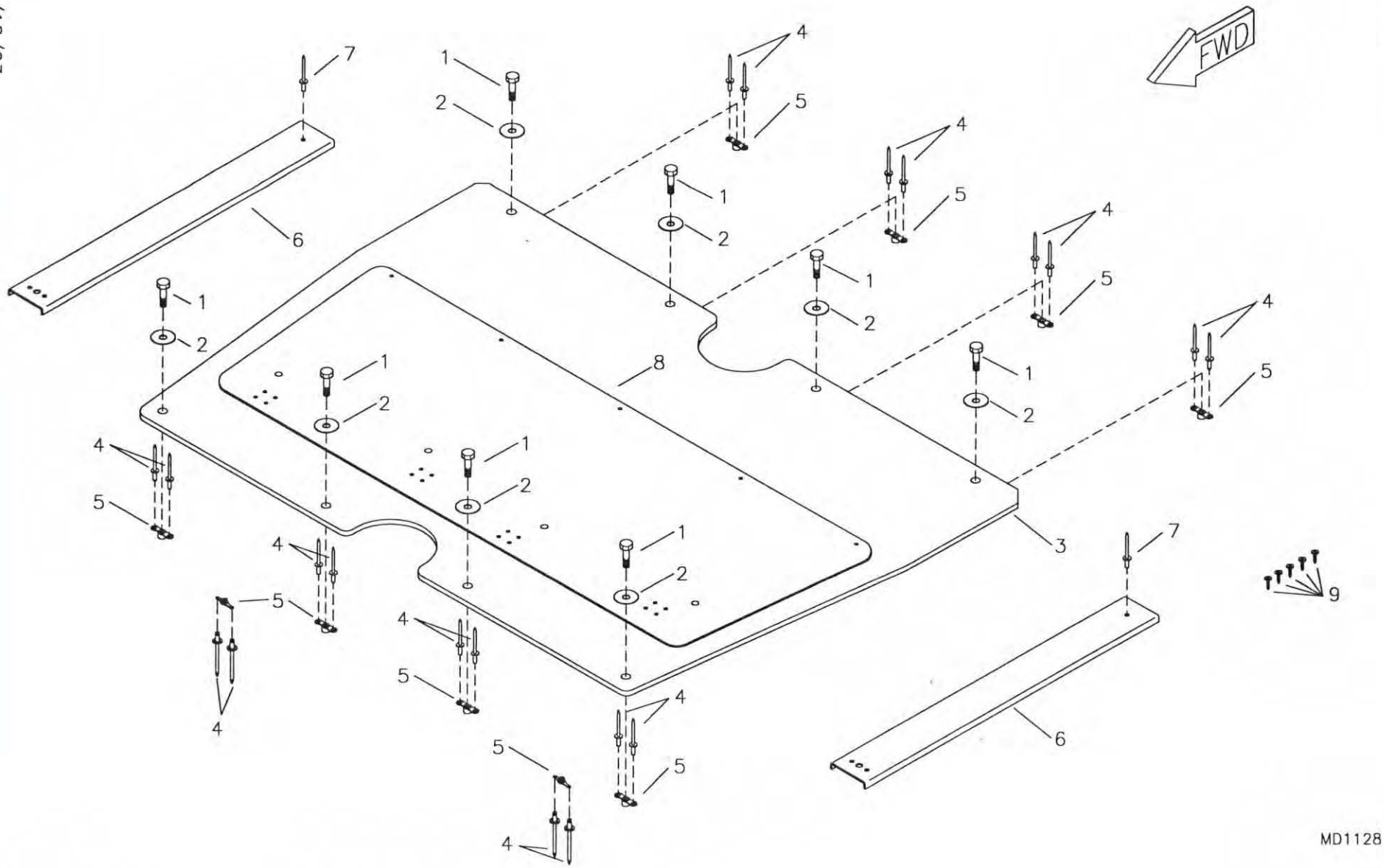

RANS S-6ES COYOTE II
FLOORBOARD ASSEMBLY

S-6ES COYOTE II - FLOORBOARD ASSEMBLY

#	DESCRIPTION	PART NUMBER	QUANTITY
1.	3/16" Bolt	AN3-5A	8
2.	3/16" Large Washer	AN970-3	8
3.	Floorboard	FB-FB(6)	1
4.	3/32" Aluminum Pop Rivet	40APR1/8	20
5.	3/16" Nut Plate	K-1000-3	10
6.	Floorboard Support Channel	KPFU0010	2
7.	3/16" Stainless Steel Pop Rivet - Cherry Q	CCPQ-64	2
8.	Wear Plate	KPFU0381	1
9.	Small Pan Head Screw	4X1/4 PHS	5

11/17/06

004A-1

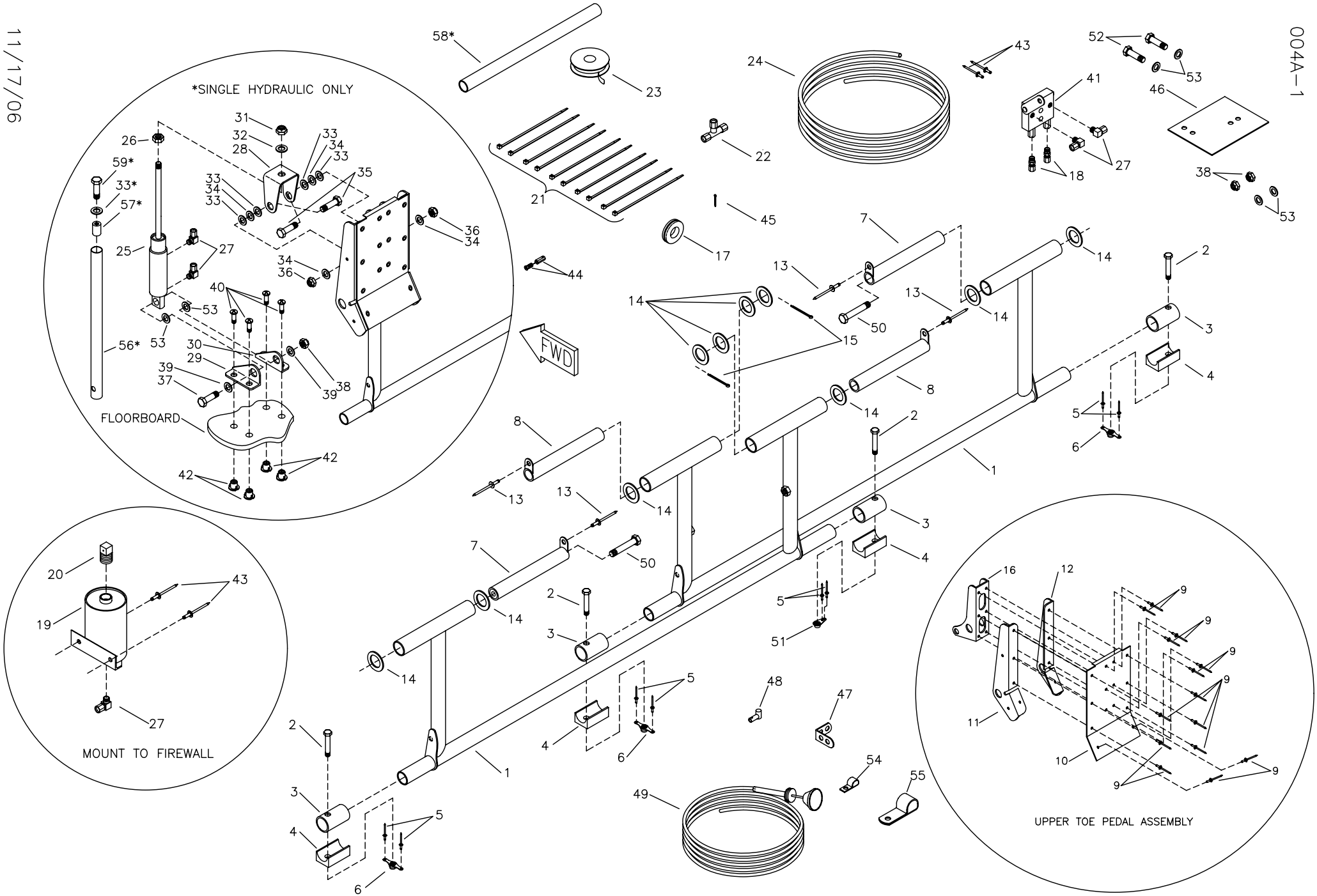

MD2600
REV. D

RANS S-6ES COYOTE II
HYDRAULIC BRAKE SYSTEM

S-6ES COYOTE II - STANDARD SINGLE HYDRAULIC BRAKE SYSTEM

#	DESCRIPTION	PART NUMBER	QUANTITY
1.	Rudder Pedal	KPCS0066	2
2.	3/16" Bolt	AN3-13A	4
3.	Rudder Pedal Bushing	KPCS0017	4
4.	Brake Saddle	KPCS0024	4
5.	3/32" Aluminum Pop Rivet	40APR1/8	8
6.	3/16" Nut Plate	K-1000-3	3
7.	Swivel Bushing	KPCS0075	2
8.	Swivel Bushing	KPCS0056	2
9.	1/8" Aluminum Pop Rivet - Cherry Q	AAPQ-42	56
10.	Rudder Pedal - Web	KPCS0063	4
11.	Rudder Pedal - Hinge Plate, LH	KPCS0064-L	4
12.	Rudder Pedal - Hinge Plate, RH	KPCS0064-R	4
13.	3/16" Stainless Steel Pop Rivet - Cherry Q	CCPQ-62	4
14.	1/2" Plastic Washer	KSAC0005	12
15.	Large Cotter Pin	MS24665-285	2
16.	Rudder Pedal - Cylinder Attach Bracket	KPCS0065	4
17.	Grommet	MS35489-6	1
18.	Straight Fitting	KSBS0002	2
19.	Hydraulic Brake Reservoir	KSBS0034	1
20.	Vented 1/8" Cap Plug ****	-----	0
21.	Zip Ties	ZIP TIES	10
22.	Tee Fitting	KSBS0003	1
23.	Teflon Tape **	TEFLON TAPE	0
24.	Hydraulic Brake Line (+4 Dual Hyd)	KSBS0004	24 ft
25.	Master Cylinder - Brake (+2 Dual Hyd)	KSBS0031	2
26.	5/16" Plain Nut *	-----	0
27.	90 Fitting	KSBS0001	11
28.	Stainless Steel U Bracket	SU-118	4
29.	Brake Mount Bracket, LH	B-MBRKT-L	4
30.	Brake Mount Bracket, RH	B-MBRKT-R	4
31.	5/16" Shear Nut (+2 Dual Hyd)	AN364-524A	2
32.	5/16" Thin Washer (+2 Dual Hyd)	AN960-516L	2
33.	1/4" Thin Washer (-2 Dual Hyd)	AN960-416L	18
34.	1/4" Thick Washer	AN960-416	16
35.	1/4" Bolt	AN4-5A	8
36.	1/4" Shear Nut	AN364-428A	8
37.	3/16" Bolt	AN3-12A	4
38.	3/16" Shear Nut	AN364-1032A	6
39.	3/16" Thick Washer	AN960-10	8
40.	8-32 Pan Head Machine Screw	KSHW0008	16
41.	Parking Brake	KSBS0007	1
42.	8-32 Tee Nut	KSHW0007	16

*Supplied with Master Cylinder.
**Builder provides. ***Builder must fabricate from raw stock.
****Supplied with Brake Reservoir.

S-6ES COYOTE II - STANDARD SINGLE HYDRAULIC BRAKE SYSTEM (CONTIN

#	DESCRIPTION	PART NUMBER	QUANTITY
43.	3/16" Aluminum Pop Rivet - Cherry Q	AAPQ-62	4
44.	Wire Swivel/Screw Stop	2361	1
45.	Small Cotter Pin	MS24665-134	1
46.	Park Brake Backing Plate	KPBS0008	1
47.	Cable Housing Swivel Stop Bracket	KPBS0010	1
48.	Cable Housing Swivel Stop	KPBS0009	1
49.	Parking Brake Control Cable	4-336	1
50.	3/16" Bolt	AN3-15	2
51.	3/16" Single Ear Nut Plate	MS21051-L3	1
52.	3/16" Bolt	AN3-12A	2
53.	3/16" Thin Washer (+4 Dual Hyd)	AN960-10L	8
54.	Conduit Clamp	S1-CC	1
55.	5/8" Non-Cushioned Clamp	AN742-D10	1
56.	Aluminum Tube, 1/2" x .035 x 7" ***	KAAC0027-1	0
57.	3/16" Insert Nut (-2 Dual Hyd)	I-NUT	2
58.	Hydraulic Brake Raw Stock Kit (-1Dual Hyd)	KAAC0027	1
59.	1/4" Bolt (-2 Dual Hyd)	AN4-4A	2

*Supplied with Master Cylinder.
**Builder provides.
***Builder must fabricate from raw stock.

S-6ES COYOTE II - OPTIONAL DUAL HYDRAULIC BRAKE SYSTEM

#	DESCRIPTION	PART NUMBER	QUANTITY
1.	Rudder Pedal	KPCS0066	2
2.	3/16" Bolt	AN3-13A	4
3.	Rudder Pedal Bushing	KPCS0017	4
4.	Brake Saddle	KPCS0024	4
5.	3/32" Aluminum Pop Rivet	40APR1/8	8
6.	3/16" Nut Plate	K-1000-3	3
7.	Swivel Bushing	KPCS0075	2
8.	Swivel Bushing	KPCS0056	2
9.	1/8" Aluminum Pop Rivet - Cherry Q	AAPQ-42	56
10.	Rudder Pedal - Web	KPCS0063	4
11.	Rudder Pedal - Hinge Plate, LH	KPCS0064-L	4
12.	Rudder Pedal - Hinge Plate, RH	KPCS0064-R	4
13.	3/16" Stainless Steel Pop Rivet - Cherry Q	CCPQ-62	4
14.	1/2" Plastic Washer	KSAC0005	12
15.	Large Cotter Pin	MS24665-285	2
16.	Rudder Pedal - Cylinder Attach Bracket	KPCS0065	4
17.	Grommet	MS35489-6	1
18.	Straight Fitting	KSBS0002	2
19.	Hydraulic Brake Reservoir	KSBS0034	1
20.	Vented 1/8" Cap Plug ****	-----	0
21.	Zip Ties	ZIP TIES	10
22.	Tee Fitting	KSBS0003	1
23.	Teflon Tape **	TEFLON TAPE	0
24.	Hydraulic Brake Line	KSBS0004	28 ft
25.	Master Cylinder - Brake	KSBS0031	4
26.	5/16" Plain Nut *	-----	0
27.	90 Fitting	KSBS0001	11
28.	Stainless Steel U Bracket	SU-118	4
29.	Brake Mount Bracket, LH	B-MBRKT-L	4
30.	Brake Mount Bracket, RH	B-MBRKT-R	4
31.	5/16" Shear Nut	AN364-524A	4
32.	5/16" Thin Washer	AN960-516L	4
33.	1/4" Thin Washer	AN960-416L	16
34.	1/4" Thick Washer	AN960-416	16
35.	1/4" Bolt	AN4-5A	8
36.	1/4" Shear Nut	AN364-428A	8
37.	3/16" Bolt	AN3-12A	4
38.	3/16" Shear Nut	AN364-1032A	6
39.	3/16" Thick Washer	AN960-10	8
40.	8-32 Pan Head Machine Screw	KSHW0008	16
41.	Parking Brake	KSBS0007	1
42.	8-32 Tee Nut	KSHW0007	16

*Supplied with Master Cylinder.
**Builder provides. ***Builder must fabricate from raw stock.
****Supplied with Brake Reservoir.

S-6ES COYOTE II - OPTIONAL DUAL HYDRAULIC BRAKE SYSTEM (CONTINUE

#	DESCRIPTION	PART NUMBER	QUANTITY
43.	3/16" Aluminum Pop Rivet - Cherry Q	AAPQ-62	4
44.	Wire Swivel/Screw Stop	2361	1
45.	Small Cotter Pin	MS24665-134	1
46.	Park Brake Backing Plate	KPBS0008	1
47.	Cable Housing Swivel Stop Bracket	KPBS0010	1
48.	Cable Housing Swivel Stop	KPBS0009	1
49.	Parking Brake Control Cable	4-336	1
50.	3/16" Bolt	AN3-15	2
51.	3/16" Single Ear Nut Plate	MS21051-L3	1
52.	3/16" Bolt	AN3-12A	2
53.	3/16" Thin Washer	AN960-10L	12
54.	Conduit Clamp	S1-CC	1
55.	5/8" Non-Cushioned Clamp	AN742-D10	1

*Supplied with Master Cylinder.
**Builder provides.
***Builder must fabricate from raw stock.

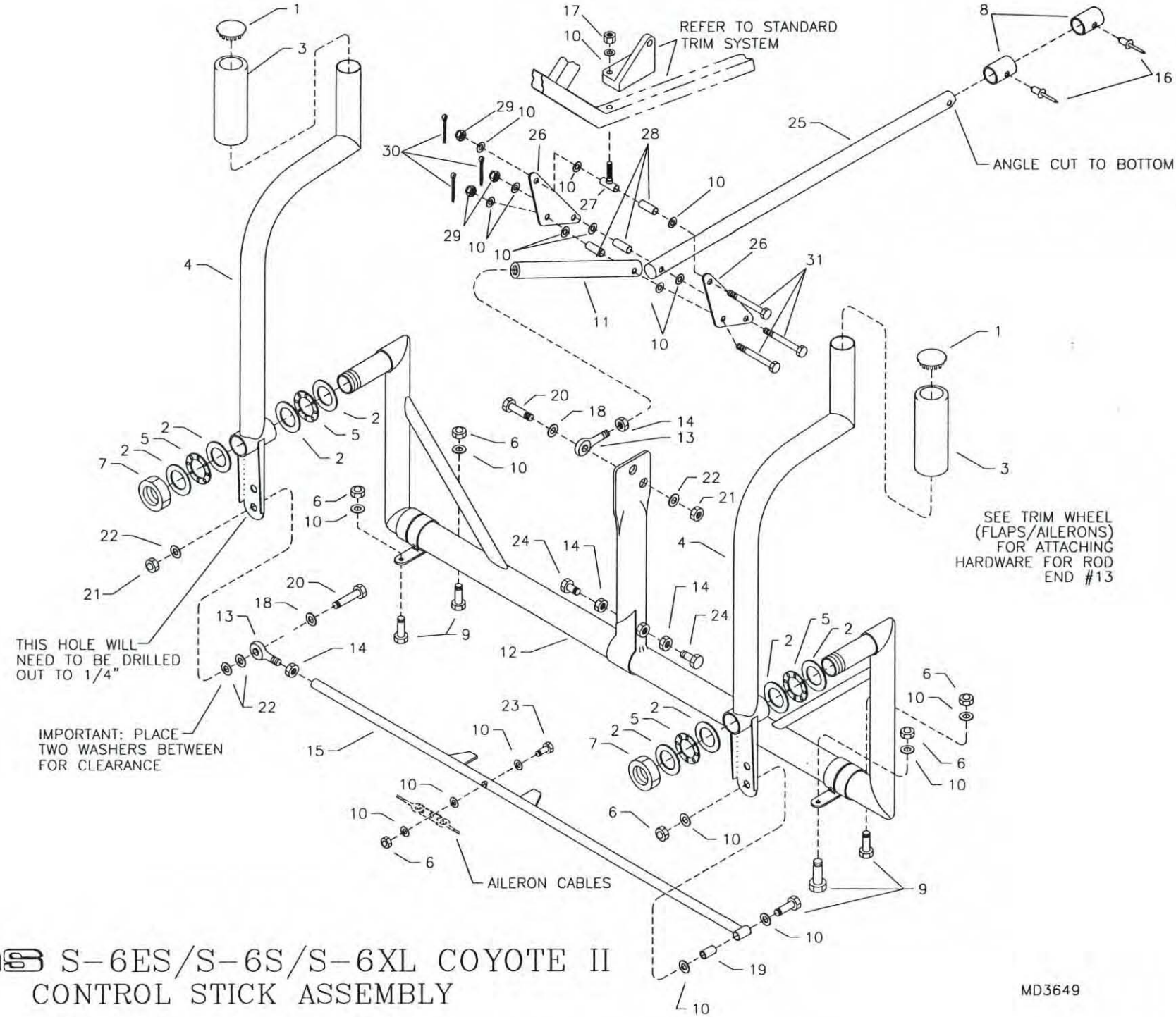

RANS S-6ES/S-6S/S-6XL COYOTE II
CONTROL STICK ASSEMBLY

S-6ES COYOTE II - CONTROL STICK

#	DESCRIPTION	PART NUMBER	QUANTITY
1.	7/8" End Cap	CS-EC	2
2.	Bearing Washer	CS-BW	8
3.	Control Stick Grip	CS-G	2
4.	Control Stick	CS-CS-A	2
5.	Thrust Bearing	CS-TB	4
6.	3/16" Shear Nut	AN364-1032A	6
7.	3/4" Nyloc Nut	CS-3/4LOCNUT	2
8.	Aluminum Stop Sleeve, 3/4" x .058 x 3/4" *	KAAC0005-1	0
9.	3/16" Bolt	AN3-10A	5
10.	3/16" Thin Washer	AN960-10L	20
11.	5/8" Push Pull Tube, 12"	KPCS0136	1
12.	Control Stick Torque Tube	CS-TT-A	1
13.	Male Rod End 1/4" x 1/4"	NM-4	2
14.	1/4" Plain Nut	AN345-416	4
15.	Control Stick Link Tube	CS-CSLT-3	1
16.	1/8" Stainless Steel Pop Rivet - Cherry Q	CCPQ-42	2
17.	3/16" Tensile Nut	AN365-1032A	1
18.	1/4" Plastic Washer	PW-4	2
19.	Aluminum Bushing, 1/4" x .028 x 17/32" *	KAAC0005-2	0
20.	1/4" Bolt	AN4-10A	2
21.	1/4" Shear Nut	AN364-428A	2
22.	1/4" Thick Washer	AN960-416	4
23.	3/16" Bolt	AN3-12A	1
24.	1/4" Plain Bolt	1/4X1 BOLT	2
25.	5/8" Push Pull Tube, 32"	KPCS0137	1
26.	Side Plate	KPAC0154	2
27.	Flap Pivot/Bushing, Bolt	KPCS0138	1
28.	Aluminum Bushing, 1/4" x .028 x 5/8" *	KAAC0005-2	0
29.	3/16" Castle Nut	AN310-3	3
30.	Small Cotter Pin	MS24665-134	3
31.	3/16" Bolt	AN3-12	3

*Builder must fabricate from raw stock.

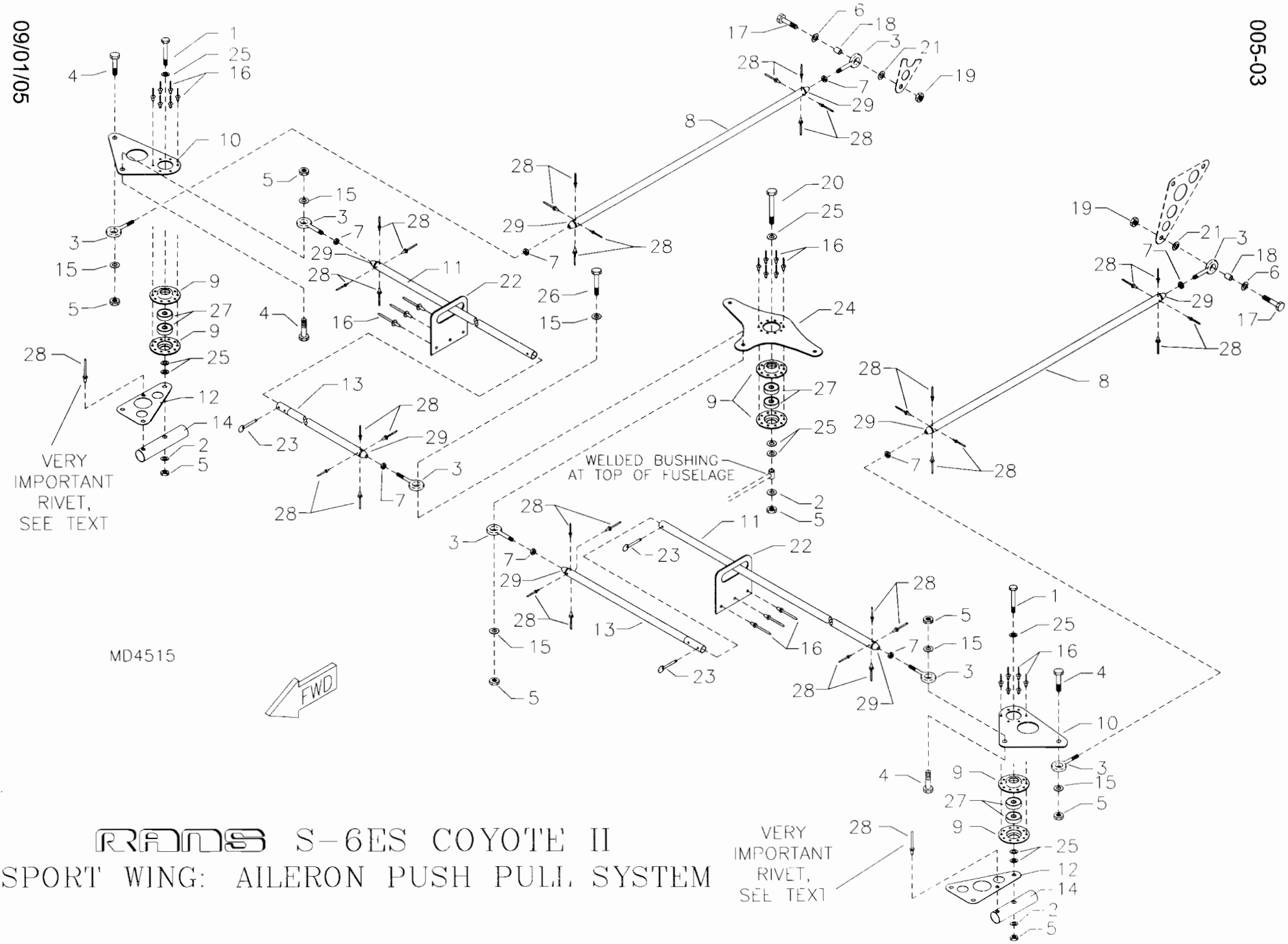

RANS S-6ES COYOTE II
SPORT WING: AILERON PUSH PULL SYSTEM

S-6ES COYOTE II - SPORT WING: AILERON PUSH PULL SYSTEM

#	DESCRIPTION	PART NUMBER	QUANTITY
1 .	1/4" Bolt	AN4-22A	2
2 .	1/4" Thin Washer	AN960-416L	3
3 .	Male Rod End 1/4" x 1/4"	NM-4	8
4 .	1/4" Bolt	AN4-7A	4
5 .	1/4" Shear Nut	AN364-428A	8
6 .	#10 SS Washer	BSHW0022	2
7 .	1/4" Plain Nut	AN345-416	8
8 .	Aileron Push Pull Tube	KPAL0096	2
9 .	Bearing Flange	BR-FLNG	6
10 .	Bell Crank	AIL-2/1BC	2
11 .	Aileron Push Pull Tube	KPWI0474	2
12 .	Bell Crank Gusset, LH	CS-BELGU-LH	1
12 .	Bell Crank Gusset, RH	CS-BELGU-RH	1
13 .	Aileron Push Pull Tube, 18"	CS-18PPT	2
14 .	Compression Tube Doubler	CS-CTD	2
15 .	1/4" X 5/8" Zinc Plated Washer	KSHW0075	6
16 .	1/8" Aluminum Pop Rivet - Cherry Q	AAPQ-44	24
17 .	3/16" Bolt	AN3-6A	2
18 .	Aluminum Bushing, 1/4" x .028 x 3/8" *	KAAC0005-2	0
18 .	Aluminum Bushing, 1/4" x .028 x 3/8" *	KAAC0005-2	2 in
19 .	3/16" Shear Acorn Nut	22NKM02	2
20 .	1/4" Bolt	AN4-17A	1
21 .	3/16" Thick Washer	AN960-10	2
22 .	Push Pull Tube Guide	KPCS0150	2
23 .	3/16" Quick Pin 1"	SS-PIN-3/16X15/16	2
24 .	Control Stick Tee	CS-TEE-B	1
25 .	1/4" Thick Washer	AN960-416	9
26 .	1/4" Bolt	AN4-12A	1
27 .	Bearing	SR4APP	6
28 .	1/8" Stainless Steel Pop Rivet - Cherry Q	CCPQ-42	34
29 .	Push Pull Tube End Fitting	CS-3/4PTEF	8

*Builder must fabricate from raw stock.

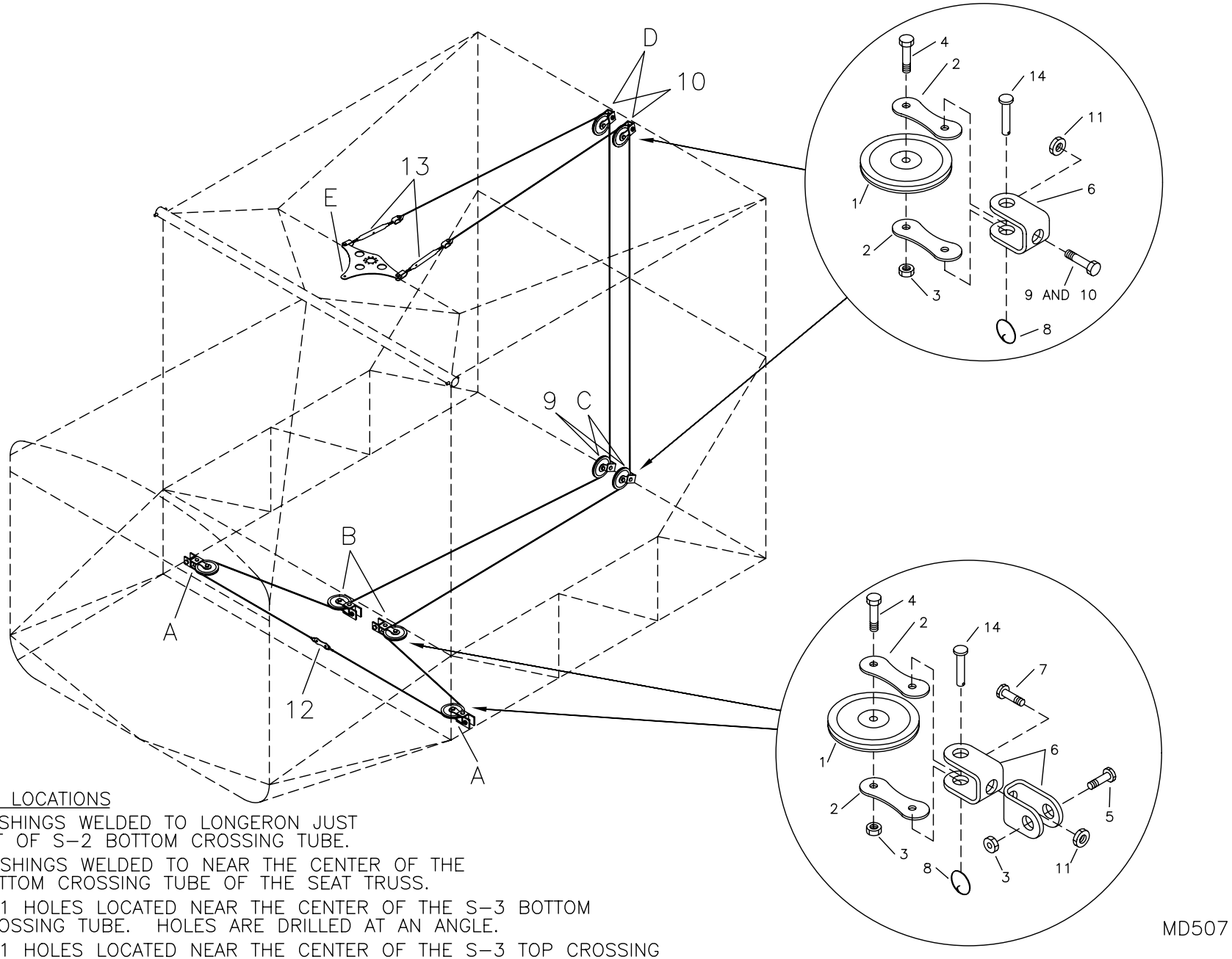

PULLEY LOCATIONS

A. BUSHINGS WELDED TO LONGERON JUST AFT OF S-2 BOTTOM CROSSING TUBE.

B. BUSHINGS WELDED TO NEAR THE CENTER OF THE BOTTOM CROSSING TUBE OF THE SEAT TRUSS.

C. #11 HOLES LOCATED NEAR THE CENTER OF THE S-3 BOTTOM CROSSING TUBE. HOLES ARE DRILLED AT AN ANGLE.

D. #11 HOLES LOCATED NEAR THE CENTER OF THE S-3 TOP CROSSING TUBE. HOLES ARE DRILLED AT AN ANGLE.

E. CONTROL TEE. SEE PUSH PULL TUBES.

RANS S-6ES/S-6S/S-6XL COYOTE II
AILERON CABLE SYSTEM

S-6ES COYOTE II - AILERON CABLES

#	DESCRIPTION	PART NUMBER	QUANTITY
1.	Pulley	AN210-2A	8
2.	Hummertang	T12-HT6	16
3.	3/16" Shear Nut	AN364-1032A	12
4.	3/16" Bolt	AN3-6A	8
5.	3/16" Bolt	AN3-7A	4
6.	Shackle	RL-205-T	12
7.	3/16" Bolt	AN3-3A	4
8.	Loc Ring	RL 27 1/4	8
9.	3/16" Bolt	AN3-11A	2
10.	3/16" Bolt	AN3-12A	2
11.	3/16" Tensile Nut	AN365-1032A	8
12.	Aileron Cables	S6ES-AIL-CAB-PPT-B	1
13.	Turnbuckle	RL-335-AT	2
14.	3/16" Clevis Pin	MS20392-2C17	8

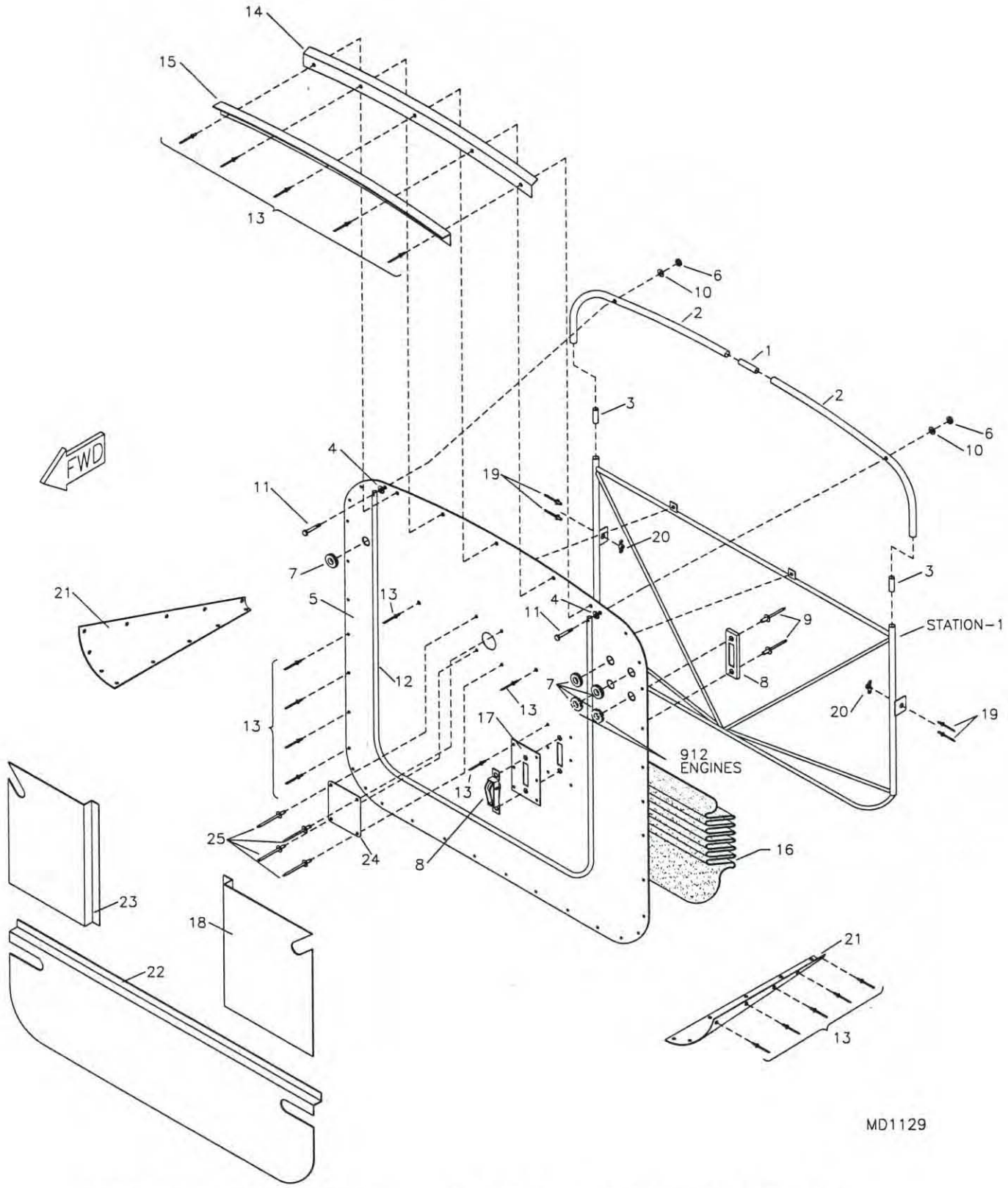

RANS S-6ES COYOTE II
FIREWALL ASSEMBLY

S-6ES COYOTE II - S-1 FIREWALL

#	DESCRIPTION	PART NUMBER	QUANTITY
1.	Aluminum Tube, 3/4" x .058 x 4" *	KAAC0005-1	0
2.	S-1 Top Former	S1-TF-ES	2
3.	Aluminum Bushing, 3/4" x .058 x 1" *	KAAC0005-1	0
4.	3/16" Thick Washer	AN960-10	2
5.	Firewall	KPFW0014	1
6.	3/16" Shear Nut	AN364-1032A	2
7.	Rubber Grommet, 912	MS35489-17	2
7.	Rubber Grommet	MS35489-17	3
8.	Firewall Pulley (-1 Elect Start) **	106	1
9.	3/16" Aluminum Pop Rivet-Cherry Q (-2 Elct Str) **	AAPQ-64	2
10.	3/16" Thin Washer	AN960-10L	2
11.	3/16" Bolt	AN3-16A	2
12.	Lace Up Tube	S1-LUT	1
13.	1/8" Aluminum Pop Rivet - Cherry Q	AAPQ-44	60
14.	Windshield Hold Down Strip	S1-WHDS-ES	1
15.	Cowling Hold Down Strip	S1-CHDS-ES	1
16.	Firewall Soundproofing	S1-FWSP	1
17.	Reinforcing Plate 4x4x.032 (-1 Elect Start) **	S1-FPP	1
18.	Firewall Heat Shield Vertical, RH	FW-VS-RH	1
19.	3/32" Aluminum Pop Rivet	40APR1/8	4
20.	3/16" Nut Plate	K-1000-3	2
21.	Forward Contour Former	EC-FCF	2
22.	Firewall Heat Shield Bottom	FW-BS	1
23.	Firewall Heat Shield Vertical, LH	FW-VS-LH	1
24.	Heater Hole Patch	KPFW0015	1
25.	3/16" Stainless Steel Pop Rivet - Cherry Q	CCPQ-62	4

*Builder must fabricate from raw stock.
**Delete with electric starter option.

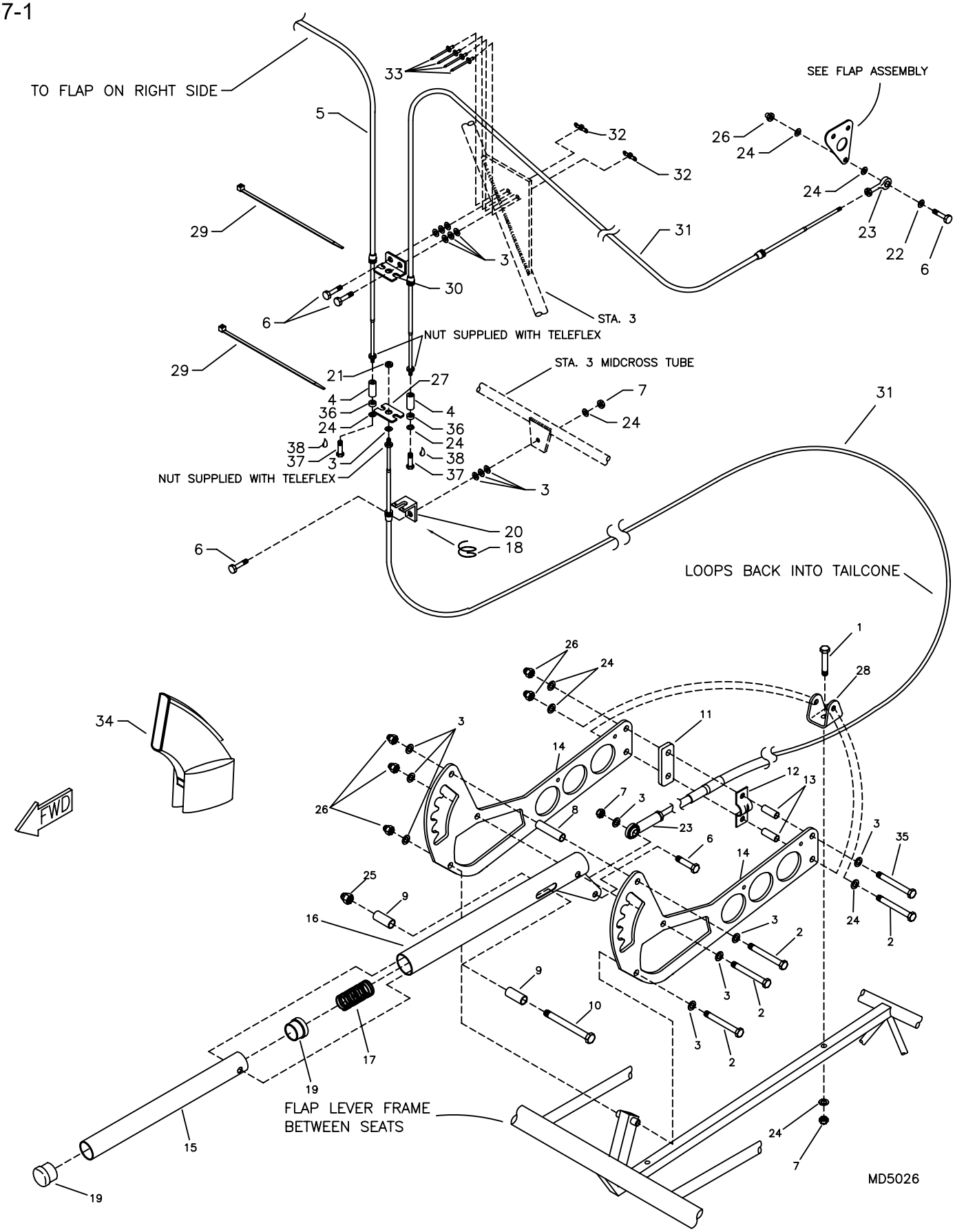

RANS S-6ES COYOTE II
SPORT WING: FLAP LEVER ASSEMBLY

S-6ES COYOTE II - SPORT WING: FLAP LEVER ASSEMBLY

#	DESCRIPTION	PART NUMBER	QUANTITY
1 .	3/16" Bolt	AN3-7A	1
2 .	3/16" Bolt	AN3-14A	4
3 .	3/16" Thick Washer	AN960-10	18
4 .	Insert Nut	KPAC0012	2
5 .	Flap Teleflex - 10', RH	W-F-TELFX-10	1
6 .	3/16" Bolt	AN3-6A	6
7 .	3/16" Shear Nut	AN364-1032A	3
8 .	Aluminum Bushing, 1/4" x .028 x 7/8" *	KAAC0005-2	0
9 .	Aluminum Bushing, 3/8" x .058 x 3/8" *	KAAC0005-3	0
10 .	1/4" Bolt	AN4-20A	1
11 .	Plastic Shim	KPAC0121	1
12 .	Teleflex Retainer Bracket	KSCS0001	1
13 .	Aluminum Bushing, 1/4" x .028 x 9/16" *	KAAC0005-2	0
14 .	Flap Lever Side Plate	KPFL0124	2
15 .	Flap Trip Release Tube	KPFL0045	1
16 .	Flap Lever	KPFL0044	1
17 .	Spring	C-21	1
18 .	Safety Wire	SAFETY WIRE	0
19 .	3/4" Endcap	3/4 ENDCAP	2
20 .	Teleflex Retainer	W-TEL-R	1
21 .	3/16" Tensile Nut	AN365-1032A	1
22 .	#10 SS Washer	BSHW0022	2
23 .	Female Rod End	NF-3	3
24 .	3/16" Thin Washer	AN960-10L	11
25 .	1/4" Shear Acorn Nut	52NKTE-048	1
26 .	3/16" Shear Acorn Nut	22NKM02	7
27 .	Flap Dual Teleflex Retainer AFT	FL-DTR-AFT	1
28 .	Horizontal Stabilizer Attach Bracket	S2-SAB	1
29 .	Zip Ties	ZIP TIES	2
30 .	Flap Dual Teleflex Retainer Forward, S-12 Style	FL-DTR-FWD	1
31 .	Flap Teleflex - 8', LH	W-F-TELFX-8	2
32 .	3/16" Nut Plate	K-1000-3	2
33 .	3/32" Aluminum Pop Rivet	40APR1/8	4
34 .	Flap Lever Cover	KAFL0004	1
35 .	3/16" Bolt	AN3-13A	1
36 .	Aluminum Bushing, 1/4" X .028 X 1/8" *	KAAC0005-2	0
37 .	3/16" Bolt	AN3-3A	2
38 .	Loctite Blue	LOC-TITE	0

*Builder must fabricate from raw stock.

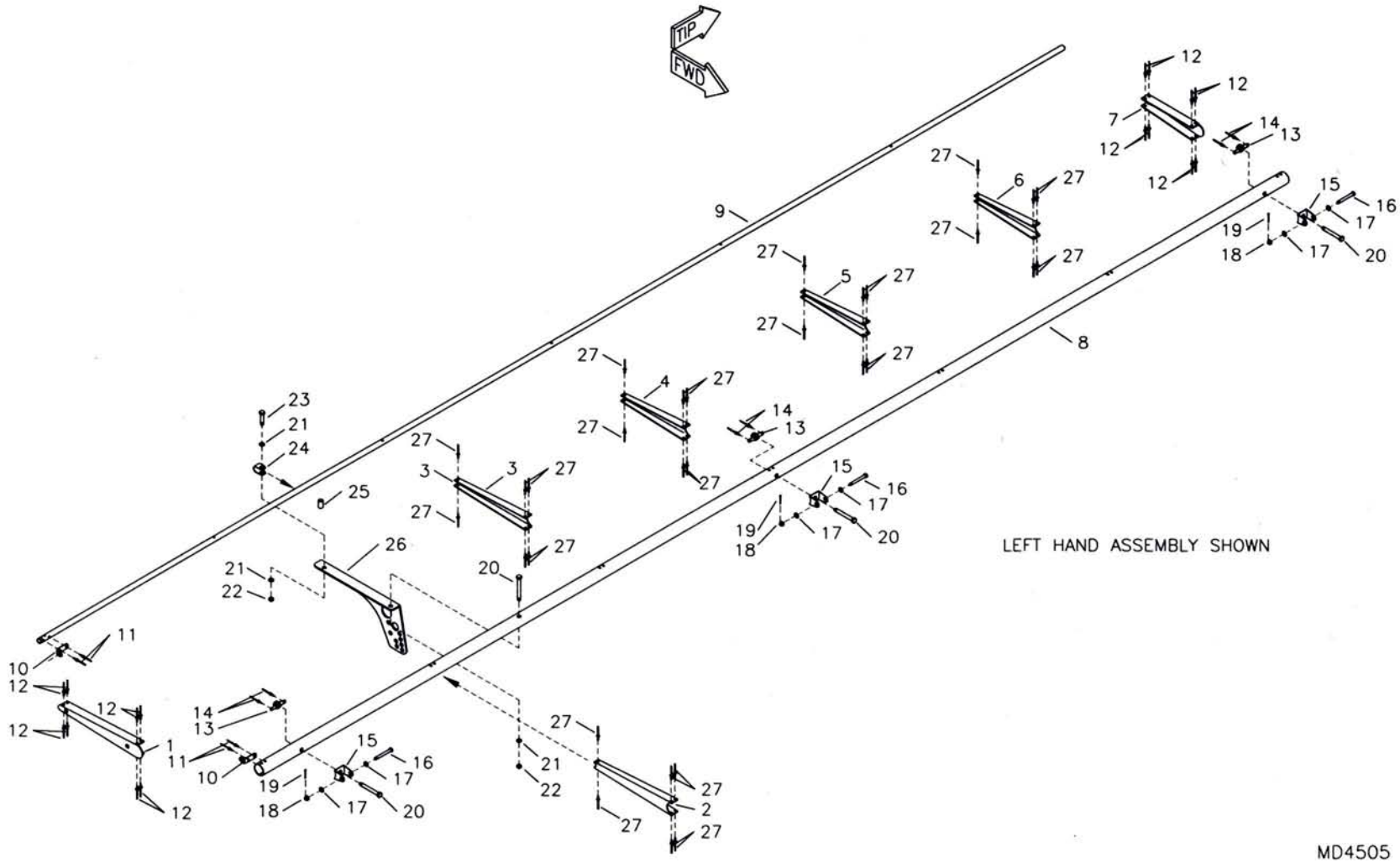

RANS S-6ES COYOTE II
SPORT WING: AILERON FRAME ASSEMBLY

S-6ES COYOTE II - SPORT WING: AILERON FRAME ASSEMBLY

#	DESCRIPTION	PART NUMBER	QUANTITY
1 .	Flap / Aileron End Rib	KPFL0100	2
2 .	Aileron Rib #1	KPAL0074	2
3 .	Aileron Rib #2	KPAL0075	2
4 .	Aileron Rib #3	KPAL0076	2
5 .	Aileron Rib #4	KPAL0077	2
6 .	Aileron Rib #5	KPAL0078	2
7 .	Aileron End Rib	KPAL0079	2
8 .	Aileron / Flap Leading Edge Spar	KPAL0080	2
9 .	Aileron / Flap Trailing Edge Spar	KPAL0081	2
10 .	Trim Tab Hinge	ST-16-BENT	4
11 .	3/16" Aluminum Pop Rivet - Cherry Q	AAPQ-62	8
12 .	1/8" Aluminum Pop Rivet - Cherry Q	AAPQ-42	32
13 .	3/16" Nut Plate	K-1000-3	6
14 .	3/32" Aluminum Rivet	40APR1/8	12
15 .	Hinge Bracket	W-HB	6
16 .	3/16" Bolt	AN3-15	6
17 .	3/16" Washer	AN960-10	12
18 .	Castle Nut	AN310-3	6
19 .	Small Cotter Pin	MS24665-134	6
20 .	3/16" Bolt	AN3-16A	8
21 .	3/16" Thin Washer	AN960-10L	6
22 .	3/16" Shear Acorn Nut	22NKM02	4
23 .	3/16" Bolt	AN3-10A	2
24 .	Aileron Clip	W-A-CLIP	2
25 .	Spacer Bushing, 1/4" x 0.28 x 1/2"	KAAC0005-2	0
26 .	Aileron Horn Attach Angle -LH	KPAL0015-L	1
26 .	Aileron Horn Attach Angle -RH	KPAL0015-R	1
27 .	1/8" Aluminum Rivet - Cherry Q	AAPQ-41	60

*Builder must fabricate from raw stock.

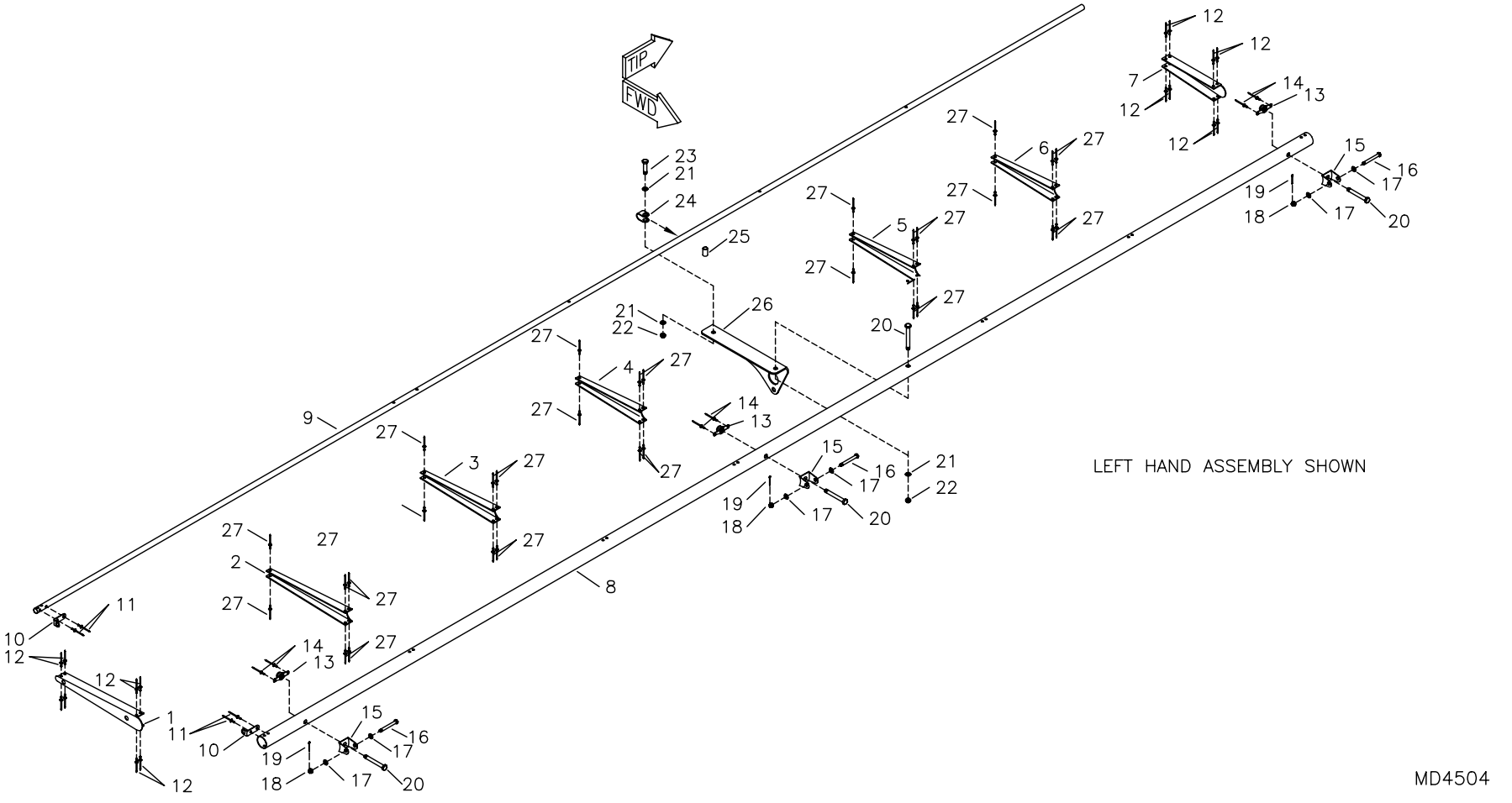

RANS S-6ES COYOTE II
SPORT WING: FLAP FRAME ASSEMBLY

S-6ES COYOTE II - SPORT WING: FLAP FRAME ASSEMBLY

#	DESCRIPTION	PART NUMBER	QUANTITY
1.	Flap End Rib	KPFL0106	2
2.	Flap Rib #1	KPFL0101	2
3.	Flap Rib #2	KPFL0102	2
4.	Flap Rib #3	KPFL0103	2
5.	Flap Rib #4	KPFL0104	2
6.	Flap Rib #5	KPFL0105	2
7.	Flap / Aileron End Rib	KPFL0100	2
8.	Aileron / Flap Leading Edge Spar	KPAL0080	2
9.	Aileron / Flap Trailing Edge Spar	KPAL0081	2
10.	Trim Tab Hinge	ST-16-BENT	4
11.	3/16" Aluminum Pop Rivet - Cherry Q	AAPQ-62	8
12.	1/8" Aluminum Pop Rivet - Cherry Q	AAPQ-42	32
13.	3/16" Nut Plate	K-1000-3	6
14.	3/32" Aluminum Rivet	40APR1/8	12
15.	Stainless Steel Hinge	W-HB	6
16.	3/16" Bolt	AN3-15	6
17.	3/16" Washer	AN960-10	12
18.	3/16" Castle Nut	AN310-3	6
19.	Small Cotter Pin	MS24665-134	6
20.	3/16" Bolt	AN3-16A	8
21.	3/16" Thin Washer	AN960-10L	6
22.	3/16" Shear Acorn Nut	22NKM02	4
23.	3/16" Bolt	AN3-10A	2
24.	Aileron Clip	W-A-CLIP	2
25.	Spacer Bushing, 1/4" X .028 X 1/2" *	KAAC0005-2	0
26.	Flap Horn Attach Angle - RH	KPFL0120-R	1
26.	Flap Horn Attach Angle - LH	KPFL0120-L	1
27.	1/8" Aluminum Rivet - Cherry Q	AAPQ-41	60

*Builder must fabricate from raw stock.

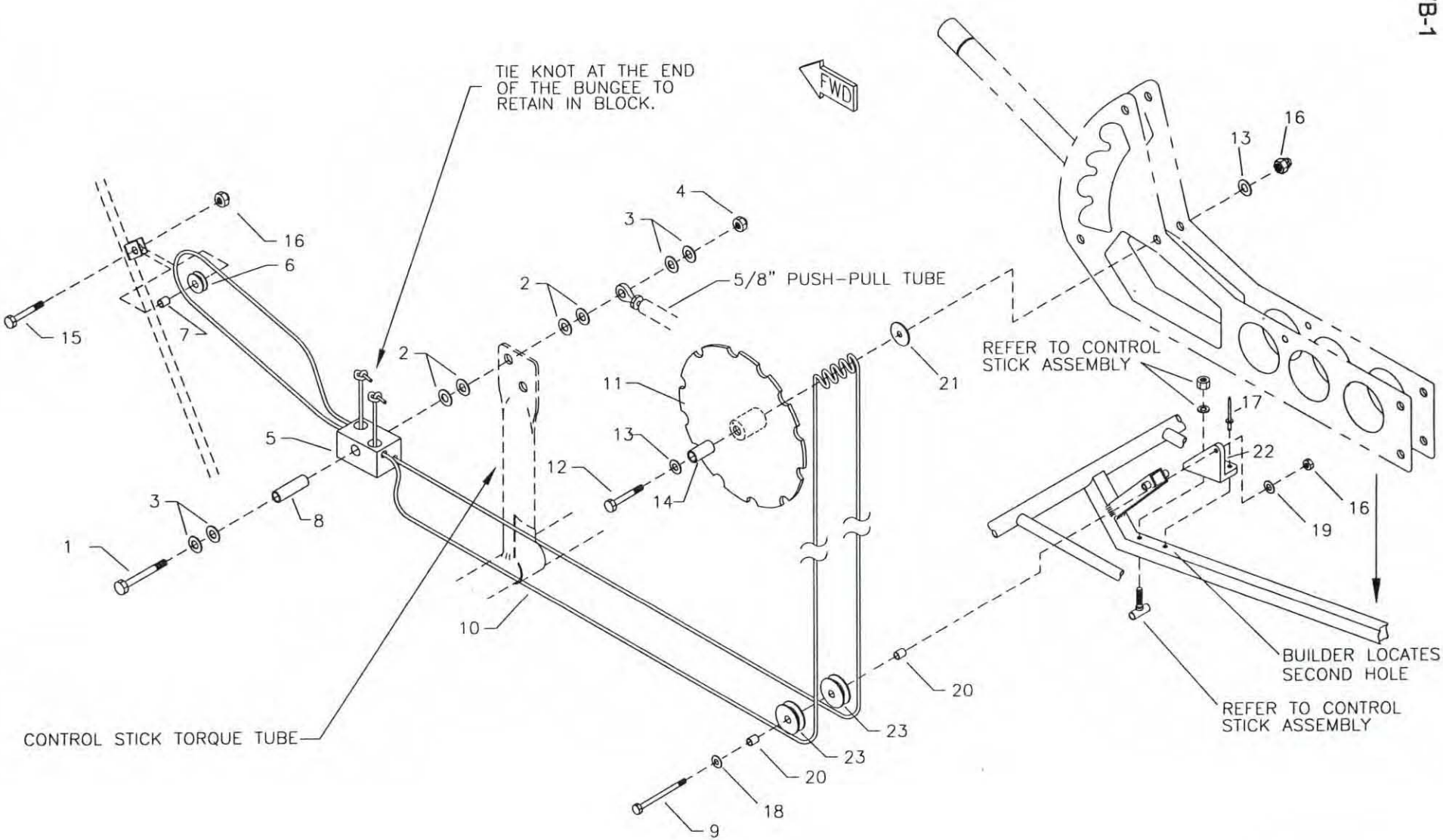

MD469

RANS S-6ES COYOTE II
STANDARD TRIM SYSTEM

S-6ES COYOTE II - STANDARD TRIM SYSTEM

#	DESCRIPTION	PART NUMBER	QUANTITY
1.	1/4" Bolt	AN4-22A	1
2.	1/4" Thick Washer	AN960-416	4
3.	1/4" Plastic Washer	PW-4	4
4.	1/4" Shear Acorn Nut	52NKTE-048	1
5.	Trim Block	PT-TBLOC	1
6.	Plastic Pulley	PT-TRPUL	1
7.	Pulley Bushing	PT-PULBUSH	1
8.	Aluminum Bushing *	-----	0
9.	3/16" Bolt	AN3-12A	1
10.	Bungee, 3/16" x 48"	PT-BUNGEE	1
11.	Trim Wheel	PT-WHEEL	1
12.	3/16" Bolt	AN3-25A	1
13.	3/16" Thick Washer	AN960-10	2
14.	Aluminum Bushing 1/4" x .028 X 1" **	KAAC0005-2	0
15.	3/16" Bolt	AN3-5A	1
16.	3/16" Shear Acorn Nut	22NKM02	3
17.	3/16" Aluminum Rivet	AAPQ-62	1
18.	3/16" Plastic Washer	PW-3	1
19.	3/16" Thin Washer	AN960-10L	1
20.	Aluminum Bushing 1/4" x .028 x 1/4" **	KAAC0005-2	0
21.	1/8" Aluminum Washer	EG-AW	1
22.	Brake Mount Bracket, RH	B-MBRKT-R	1
23.	Pulley	KSAC0026	2

*Supplied with Trim Block.
**Builder must fabricate from raw stock.

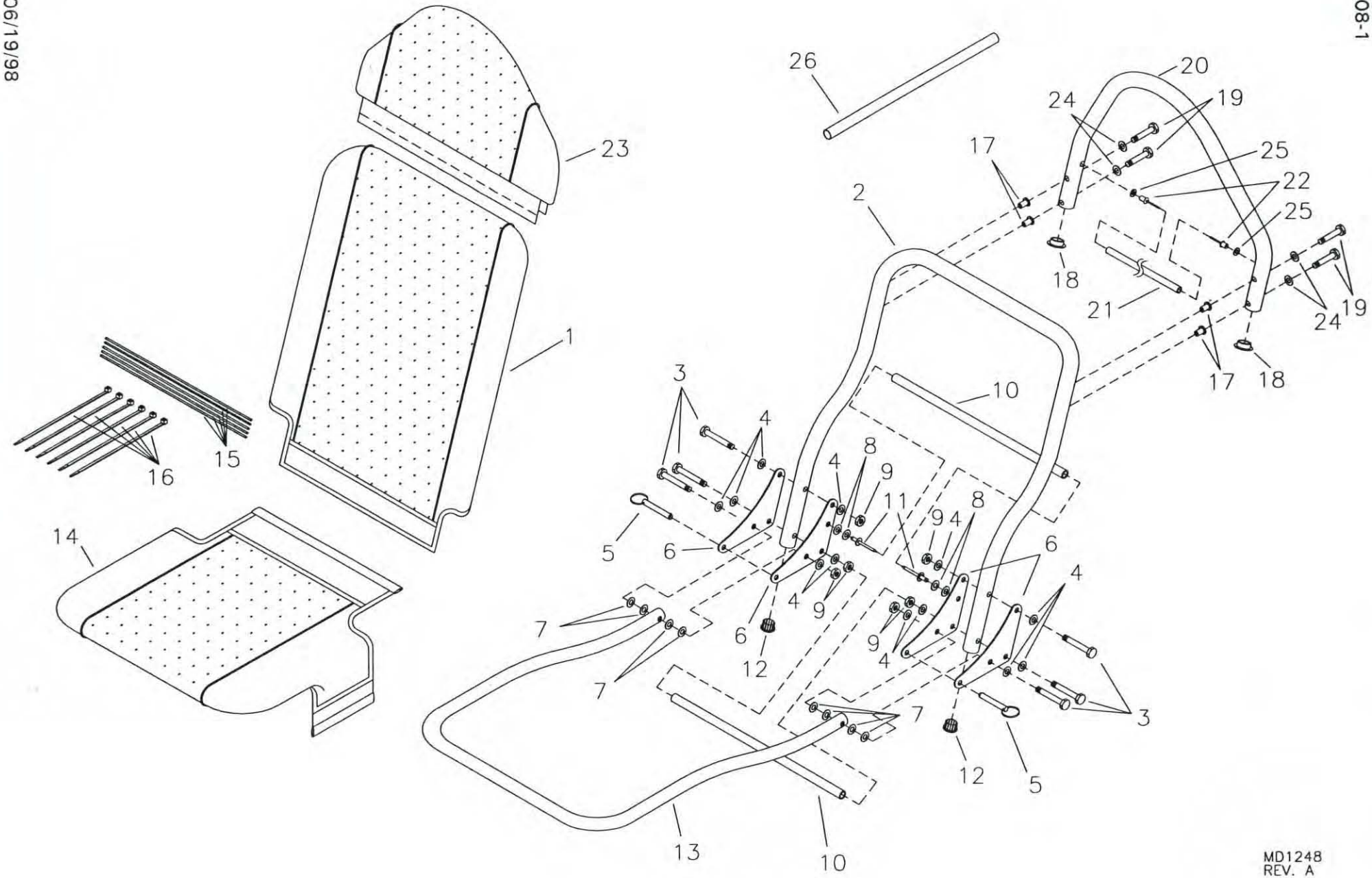

RANS S-6ES COYOTE II
SEAT/HEADREST ASSEMBLY

S-6ES COYOTE II - SEAT/HEADREST

#	DESCRIPTION	PART NUMBER	QUANTITY
1.	Seat Back Cover	ST-SBC	2
2.	Seat Back Frame	ST-SBF	2
3.	3/16" Bolt	AN3-14A	12
4.	3/16" Thin Washer	AN960-10L	24
5.	1/4" Quick Pin	PIN 1/4X1.2	4
6.	Seat Back Gusset	ST-GUS	8
7.	3/16" Plastic Washer	PW-3	16
8.	3/16" Thick Washer	AN960-10	8
9.	3/16" Shear Nut	AN364-1032A	12
10.	Seat Internal Brace, 1/2" x .035 x X *	KAAC0005-4	0
11.	3/16" Aluminum Pop Rivet - Cherry Q	AAPQ-64	4
12.	7/8" End Cap	CS-EC	4
13.	Seat Bottom Frame	KPST0001	2
14.	Seat Bottom Cover, LH/RH	ST-SBTC-A	2
15.	1/16" Lacing Wires, (stick) 36" x 1/16"	TG-LW-1/16	5
16.	Long Zip Ties	LONG ZIP TIES	40
17.	3/16" Rivet Nut **	MS27130-A25K	8
18.	1" End Cap **	1 CAP	4
19.	3/16" Bolt **	AN3-13A	8
20.	Headrest Frame **	ST-HRF(6/12)	2
21.	Headrest Internal Brace,1/2" x .035 x X * , **	KAAC0014-1	0
22.	3/16" Aluminum Pop Rivet - Cherry Q **	AAPQ-62	4
23.	Headrest Cover **	ST-HRC	2
24.	3/16" Thin Washer **	AN960-10L	8
25.	3/16" Thick Washer **	AN960-10	4
26.	Headrest Raw Stock Kit **	KAAC0014	1

*Builder must fabricate from raw stock.
**The headrest is an optional item.

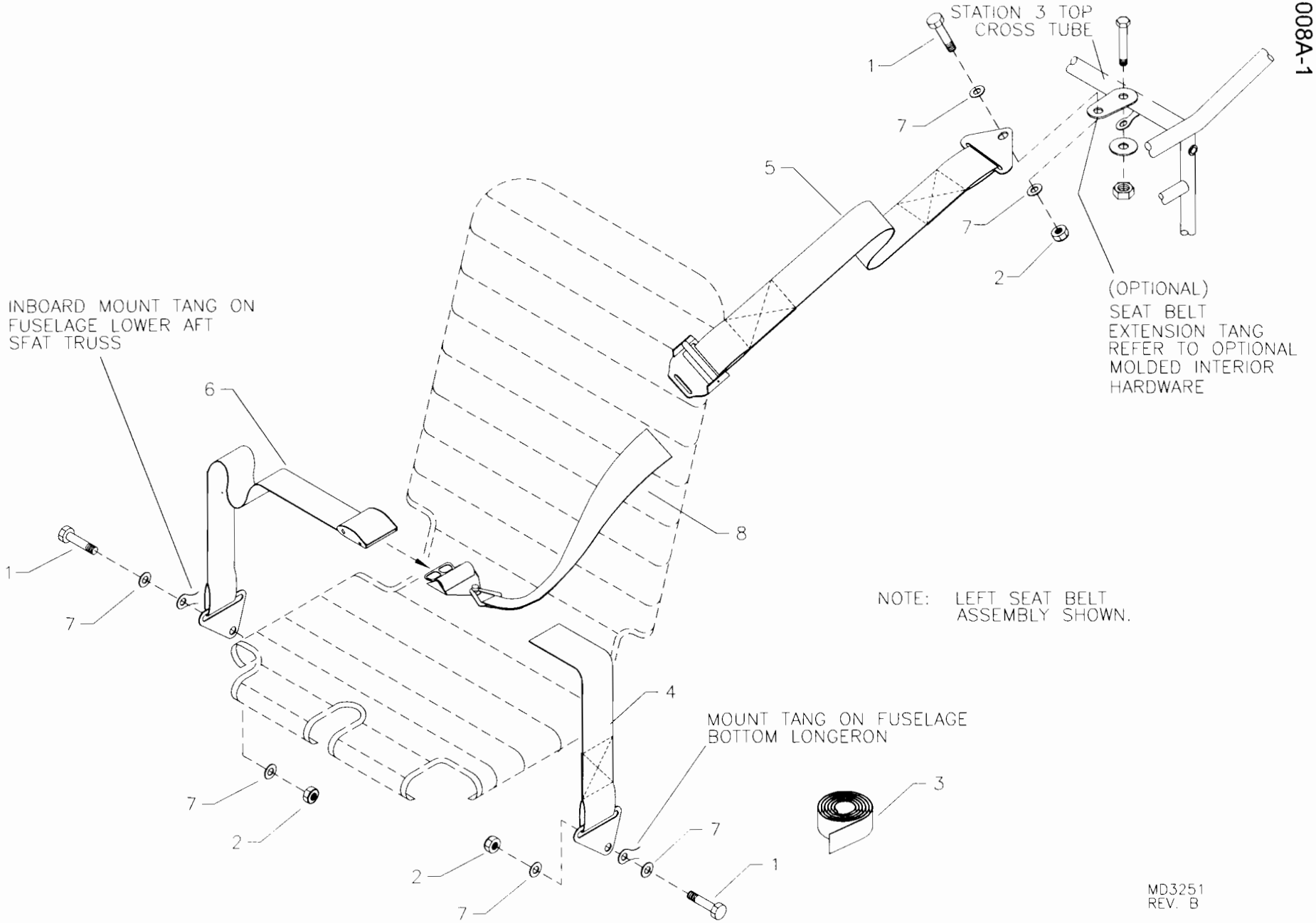

RANS S-6ES COYOTE II
SEAT BELT INSTALLATION

S-6ES COYOTE II - SEAT BELT SYSTEM

#	DESCRIPTION	PART NUMBER	QUANTITY
1.	1/4" Bolt	AN4-5A	6
2.	1/4" Shear Nut	AN364-428A	6
3.	Seat Belt Kit	KAST0025	1
4.	Lap Belt - Buckle Side *	KAST0025-2	0
5.	Shoulder Belt *	KAST0025-4	0
6.	Lap Belt - Clip Side *	KAST0025-1	0
7.	1/4" Thick Washer	AN960-416	12
8.	Shoulder Belt - Swivel Clip End *	KAST0025-3	0

*Supplied in Seat Belt Kit.

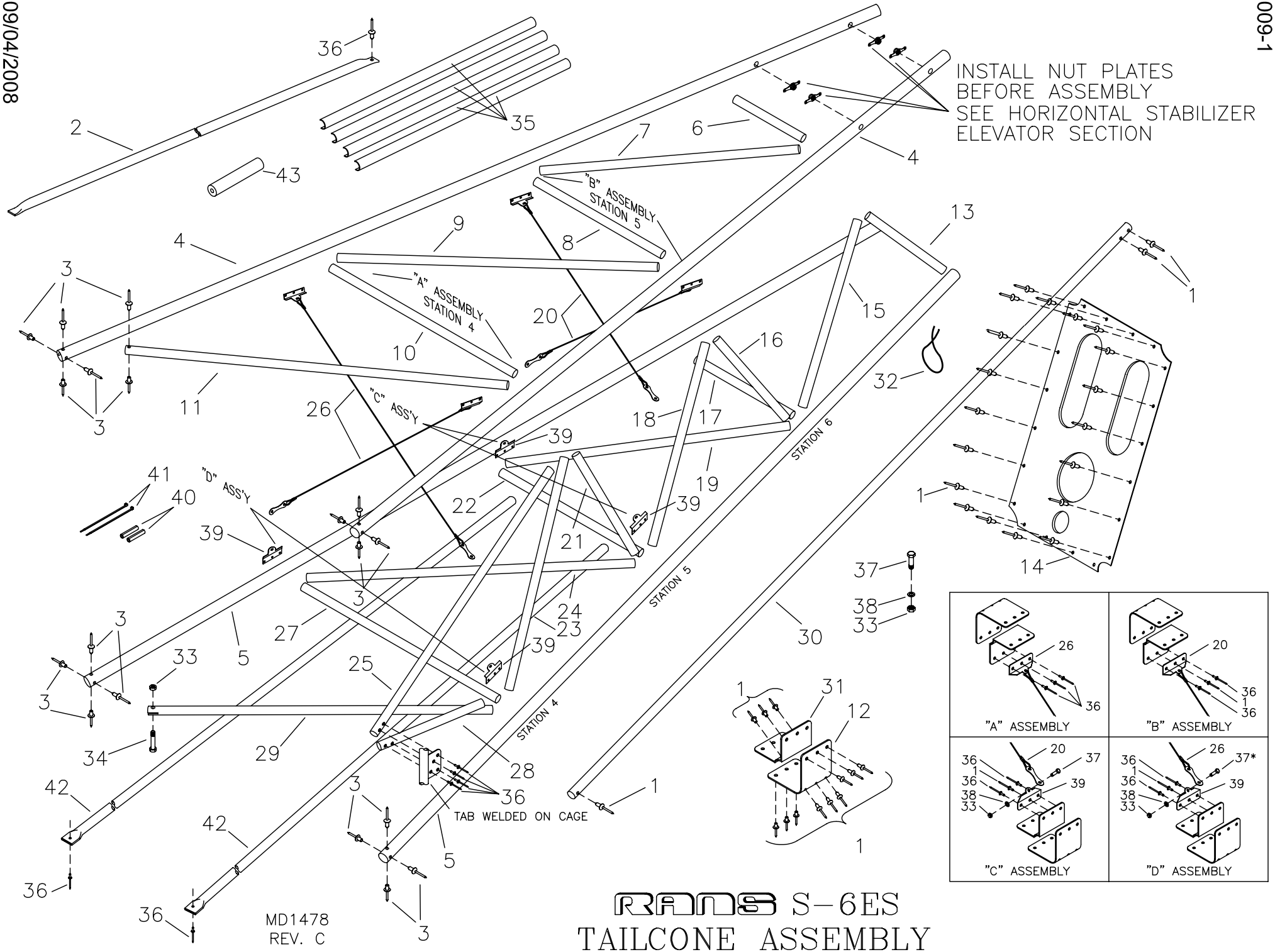

MD1478
REV. C

RANS S-6ES
TAILCONE ASSEMBLY

S-6ES COYOTE II - TAILCONE

#	DESCRIPTION	PART NUMBER	QUANTITY
1 .	1/8" Stainless Steel Rivet - Cherry Q	CCPQ-42	227
2 .	Top Stringer	TC-T-STR	1
3 .	3/16" Stainless Steel Rivet - Cherry Q	CCPQ-62	20
4 .	Top Longeron	TC-TOP-LONG-A	2
5 .	Bottom Longeron	TC-BOT-LONG	2
6 .	Station 6 Top Cross Tube	TC-S-6-T	1
7 .	Station 6 Top Diagonal	TC-6-T-1	1
8 .	Station 5 Top Cross Tube	TC-S-5-1	1
9 .	Station 5 Top Diagonal	TC-5-T-1	1
10 .	Station 4 Top Cross Tube	TC-S-4-T	1
11 .	Station 4 Top Diagonal	TC-4-T-1	1
12 .	3-Way Cluster Gusset Outer	3-CG-O	12
13 .	Station 7 Side Diagonal	TC-7-1	2
14 .	Station 6 Bulkhead	KPFU0027	1
15 .	Station 6 Side Tube	TC-S-6	2
16 .	Station 6 Side Diagonal	TC-6-1	2
17 .	Station 6 Bottom Cross Tube	TC-S-6-B	1
18 .	Station 5 Side Tube	TC-S-5	2
19 .	Station 6 Bottom Diagonal	TC-6-B-1	1
20 .	Station 5 Diagonal Cable	KAFU0011	2
21 .	Station 5 Side Diagonal	TC-5-1	2
22 .	Station 5 Bottom Cross Tube	TC-S-5-B	1
23 .	Station 4 Side Tube	TC-S-4	2
24 .	Station 5 Bottom Diagonal	TC-5-B-1	1
25 .	Station 4 Side Diagonal	TC-4-1	2
26 .	Station 4 Diagonal Cable	KAFU0012	2
27 .	Station 4 Bottom Cross Tube	TC-S-4-B	1
28 .	Station 4 Lower Side Diagonal	TC-4-2	2
29 .	Station 4 Bottom Diagonal	TC-4-B-1	1
30 .	Side Stringer	TC-S-STR	2
31 .	3-Way Cluster Gusset Inner	3-CG-I	12
32 .	Safety Wire	SAFETY WIRE	0
33 .	3/16" Shear Nut	AN364-1032A	5
34 .	3/16" Bolt	AN3-11A	1
35 .	Longeron Fairings	LONG-FAR	4
36 .	1/8" Stainless Steel Rivet - Cherry Q	CCPQ-44	39
37 .	3/16" Bolt	AN3-4A	4
38 .	3/16" Thin Washer	AN960-10L	4
39 .	Tailcone Cable Attachment	KPFU0026	4
40 .	1/8" Primer Line, 1"	PRIMER LINE	2
41 .	Short Black Nylon Ties	N-TIES	2
42 .	Bottom Stringer, 1/2" x .035 x 119" *	KAAC0005-4	0
43 .	Stringer Stand Off, 1/2" Nylon Tubing x X *	KAAC0005-11	0

*Builder must fabricate from raw stock.
**Use AN3-5A if installing Optional AFT Baggage Compartment.

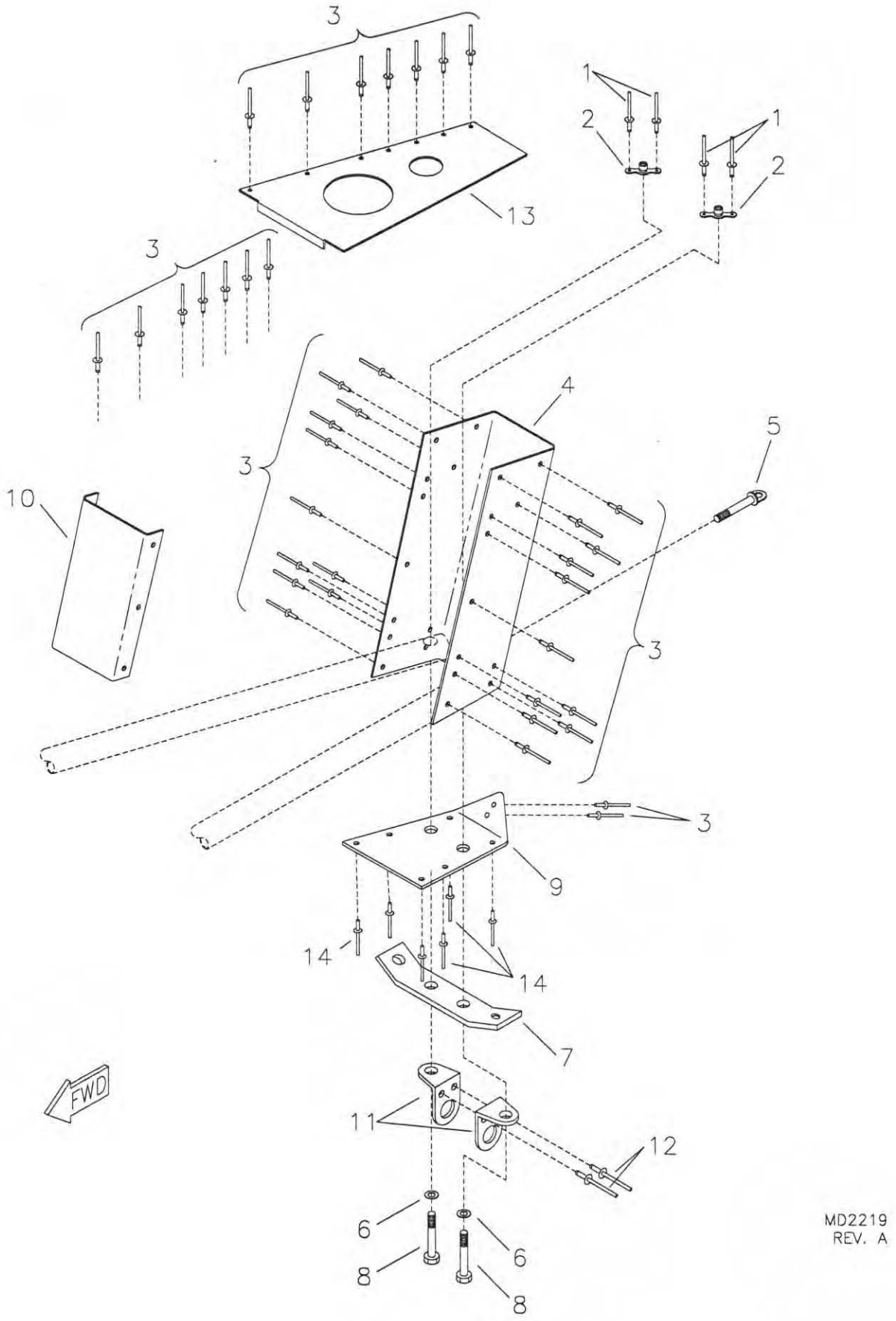

RANS S-6ES/S-6XL COYOTE II
TAIL CHANNEL ASSEMBLY

S-6ES COYOTE II - TAIL CHANNEL

#	DESCRIPTION	PART NUMBER	QUANTITY
1.	3/32" Aluminum Pop Rivet (Trike only)	40APR1/8	4
2.	1/4" Nut Plate (Trike only)	MS21047-04	2
3.	1/8" Stainless Steel Pop Rivet - Cherry Q	CCPQ-42	56
4.	Tail Channel	TC-TC	1
5.	1/4" Eyebolt *	AN43B-13A	0
6.	1/4" Thin Washer (Trike only)	AN960-416L	2
7.	Lower Cable Tang (Trike only)	TC-LCT	1
8.	1/4" Bolt	AN4-16A	2
9.	Bottom Gusset - Tail Channel	KPFU0279	1
10.	Tail Channel Cover	TC-COVER	1
11.	Tail Tie Down Hook (Trike only)	KPFU0012	2
12.	1/8" Stainless Steel Pop Rivet - Cherry Q	CCPQ-46	2
13.	Tailcone Upper Gusset	KPFU0074	1
14.	1/8" Stainless Steel Pop Rivet-Cherry Q-Trike only	CCPQ-42	6

*See Vertical Stabilizer.

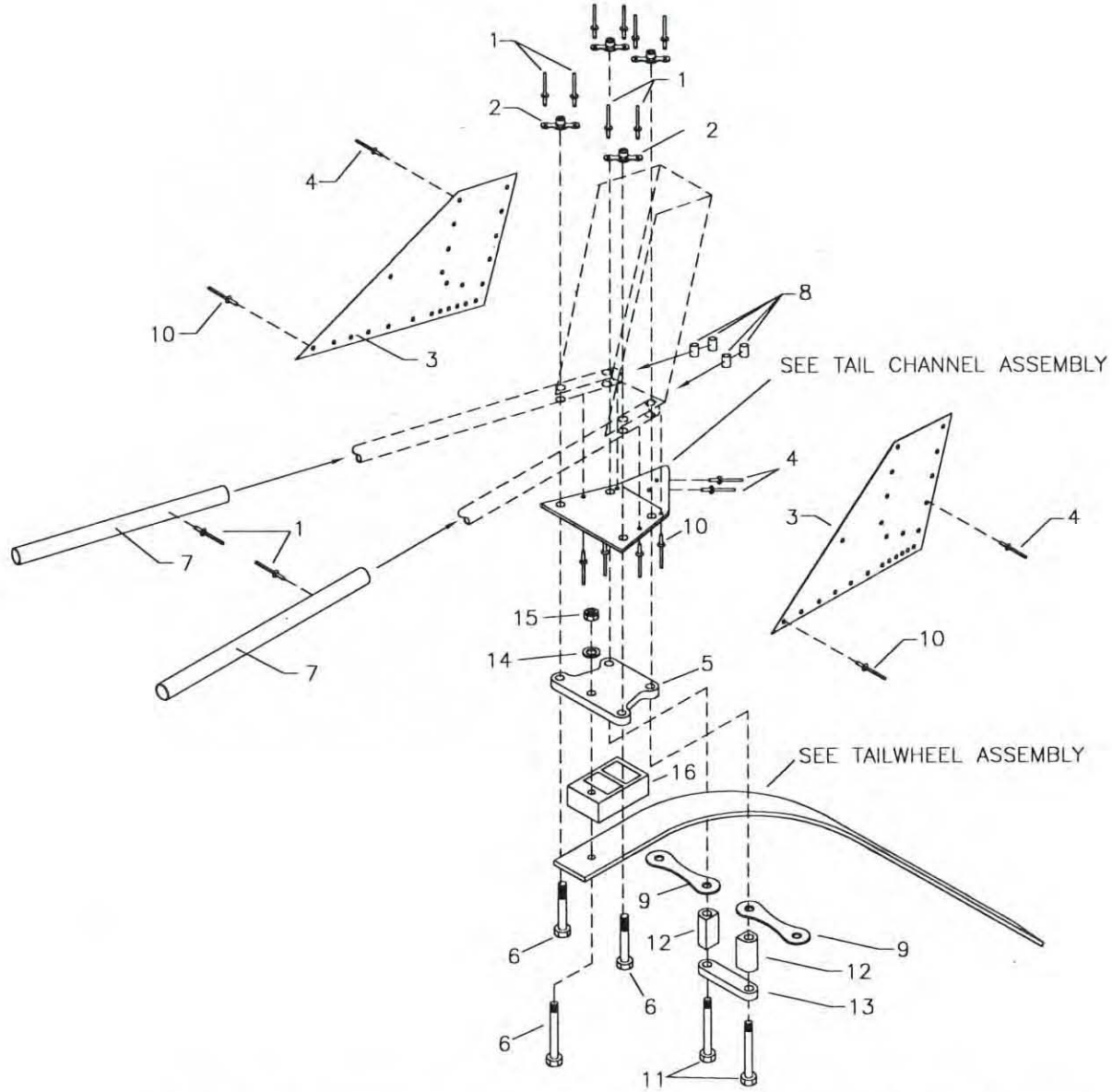

MD245
REV. C

RANS S-6ES COYOTE II
CONVENTIONAL GEAR MODEL (TD)
TAIL SPRING MOUNT

S-6ES COYOTE II - TAIL SPRING MOUNT

#	DESCRIPTION	PART NUMBER	QUANTITY
1.	3/32" Aluminum Pop Rivet	40APR1/4	10
2.	1/4" Nut Plate	MS21047-04	4
3.	Tail Spring Side Gusset	TSM-SG-T2	2
4.	1/8" Stainless Steel Pop Rivet - Cherry Q	CCPQ-42	22
5.	Tail Spring Mount Plate	KPTG0032	1
6.	1/4" Bolt	AN4-16A	3
7.	Longeron Doubler	TSM-DUB	2
8.	Aluminum Bushing, 3/8" x .065 x X *	TD-ANTI-CB	1
9.	Hummertang **	T12-HT6	2
10.	1/8" Stainless Steel Pop Rivet - Cherry Q	CCPQ-44	26
11.	1/4" Bolt	AN4-31A	2
12.	Bushing - Tailwheel	KPTG0031	2
13.	Mount Strap - Tailwheel	KPTG0030	1
14.	1/4" Thin Washer	AN960-416L	1
15.	1/4" Tensile Nut	AN365-428A	1
16.	3/4" Spacer Block - Tailwheel	KPTG0034	1

*Builder must fabricate from raw stock.
**Builder drills 1 end to 1/4" diameter.

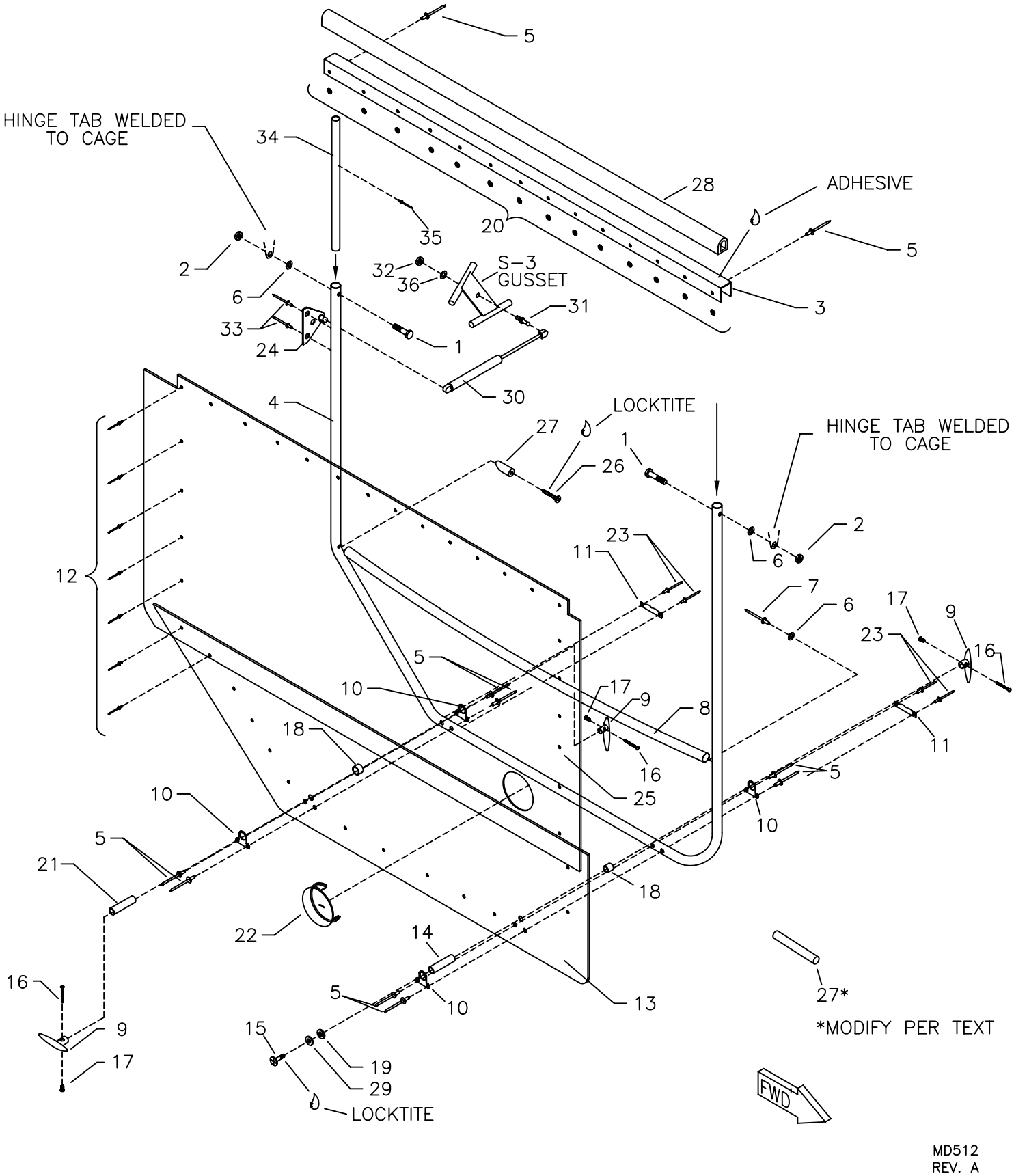

RANS S-6ES COYOTE II
DOOR ASSEMBLY

S-6ES COYOTE II - DOOR ASSEMBLY

#	DESCRIPTION	PART NUMBER	QUANTITY
1 .	3/16" Bolt	AN3-10A	4
2 .	3/16" Shear Nut	AN364-1032A	4
3 .	Door Top Channel	D-TC-ES	2
4 .	Door Frame	D-FRAME-ES	2
5 .	1/8" Stainless Steel Pop Rivet - Cherry Q	CCPQ-42	20
6 .	3/16" Thick Washer	AN960-10	6
7 .	3/16" Aluminum Pop Rivet - Cherry Q	AAPQ-62	2
8 .	Door Rib	D-RIB-B	2
9 .	Door Handle	KPDR0026	6
10 .	Door Handle Gusset	D-DHG	8
11 .	Door Rub Block *	D-RB	4
12 .	1/8" Aluminum Rivet - Avex	1691-0410	112
13 .	Door Lexan - Lower	KPDR0100	2
14 .	Aluminum Bushing, 3/8" x .095 x 1 1/4" ***	KAAC0005-10	0
15 .	Button Head Cap Screw (M5 x .8mm)	BSHW0010	2
16 .	Button Head Screw	KSHW0024	6
17 .	Flange Nut	KSHW0025	6
18 .	Aluminum Bushing, 1/2" x .058 x 5/8" ***	KAAC0005-9	0
19 .	3/16" Plastic Washer	PW-3	4
20 .	1/8" Small Brass Washer	AN960-B4	28
21 .	Aluminum Bushing, 3/8" x .095 x 2" ***	KAAC0005-10	0
22 .	Air Vent	AIR-VENT	2
23 .	1/8" Stainless Steel Pop Rivet - Cherry Q	CCPQ-45	8
24 .	Flat Bracket w/ .39 Ball	KSHW0077	2
25 .	Door Lexan - Upper	KPDR0099	2
26 .	Stainless Steel Panhead Screw	SS-SCREW-#10X1	2
27 .	Door Rib Retainer **	KPDR0101	1
28 .	Foam Seal - "D-Cell"	KSAC0013	41 in
29 .	3/16" Thin Washer	AN960-10L	2
30 .	Gas Spring	KSHW0078	2
31 .	Ball Stud	KSHW0021	2
32 .	5/16" Loc Nut - Course	KSHW0022	2
33 .	3/16" Stainless Steel Rivet - Cherry Q	CCPQ-64	4
34 .	Aluminum Doubler - Door	KPDR0103	2
35 .	3/32" Aluminum Rivet	40APR1/8	2
36 .	5/16" Thick Washer	AN960-516	2

*The rub block is actually a small aluminum tube formed to shape.
**Builder modifies, refer to text.
***Builder must fabricate from raw stock.

0011-1

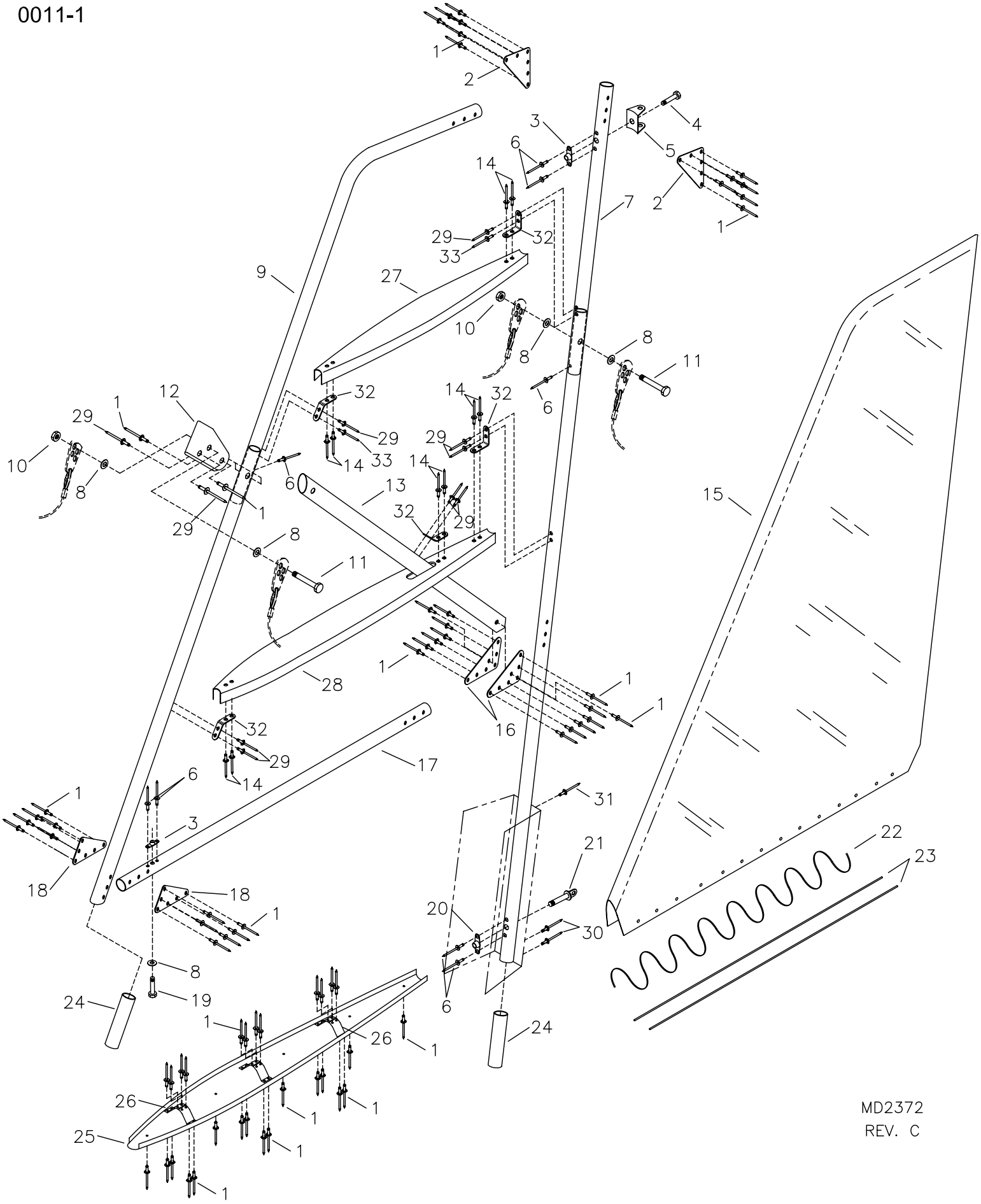

RANS S-6ES COYOTE II
VERTICAL STABILIZER ASSEMBLY

09/26/06

S-6ES COYOTE II - VERTICAL STABILIZER

#	DESCRIPTION	PART NUMBER	QUANTITY
1.	1/8" Stainless Steel Pop Rivet - Cherry Q	CCPQ-42	64
2.	Gusset	U-ST004	2
3.	3/16" Nut Plate	K-1000-3	2
4.	3/16" Bolt	AN3-13A	1
5.	Stainless Steel Hinge	W-HB	1
6.	3/32" Aluminum Pop Rivet	40APR1/8	8
7.	Vertical Stabilizer Spar	KPVS0004	1
8.	3/16" Thick Washer	AN960-10	5
9.	Vertical Stabilizer Leading Edge	KPVS0003	1
10.	3/16" Tensile Nut	AN365-1032A	2
11.	3/16" Bolt	AN3-15A	2
12.	U-Bracket	KPAC0055	1
13.	Aluminum Internal Brace, 1" x .049 x X *	KAAC0005-5	0
14.	1/8" Aluminum Pop Rivet - Cherry Q	AAPQ-41	8
15.	Vertical Stabilizer Skin	TG-VS-XL	1
16.	Gusset	KPAC0014	2
17.	Vertical Stabilizer Spreader Tube	KPVS0002	1
18.	Side Former Door Former Gusset	FE-SF-DF-GUS	2
19.	3/16" Bolt	AN3-22A	1
20.	1/4" Nut Plate	MS21047-04	1
21.	1/4" Eyebolt	AN43B-13A	1
22.	Nylon Lace Up Rope	36 SEINE	8 ft
23.	1/16" Lacing Wires, (stick) 36" x 1/16"	TG-LW-1/16	2
24.	Aluminum Doubler, 7/8" x .058 x 6" *	KAAC0005-6	0
25.	Vertical Stabilizer Bottom Rib	KPVS0007	1
26.	Vertical Stabilizer End Rib Brace	KPWI0015	6
27.	Vertical Stabilizer - Upper Rib	KPVS0083	1
28.	Vertical Stabilizer - Lower Rib	KPVS0084	1
29.	1/8" Aluminum Pop Rivet - Cherry Q	AAPQ-42	10
30.	1/8" Stainless Steel Pop Rivet - Cherry Q	CCPQ-44	2
31.	3/16" Stainless Steel Pop Rivet - Cherry Q	CCPQ-64	1
32.	Attach Tang	U-ST001	5
33.	1/8" Aluminum Pop Rivet - Cherry Q	AAPQ-44	2

*Builder must fabricate from raw stock.

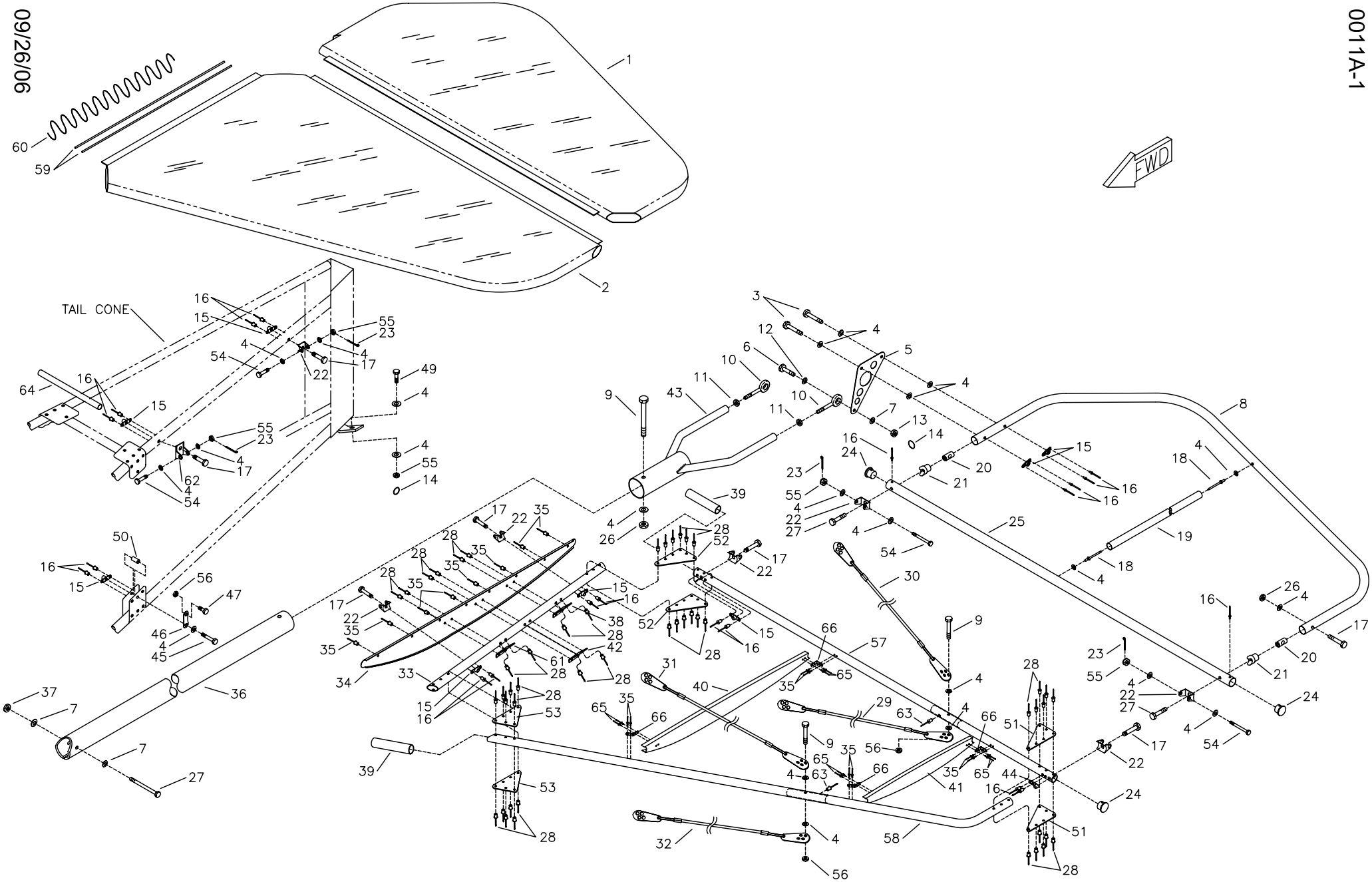

MD695
REV. A

RAMS S-6ES COYOTE II
HORIZONTAL STABILIZER & ELEVATOR

S-6ES COYOTE II - HORIZONTAL STABILIZER & ELEVATOR

#	DESCRIPTION	PART NUMBER	QUANTITY
1.	Elevator Skin	TG-ES	2
2.	Horizontal Stabilizer Skin	TG-HSSKIN-A	2
3.	3/16" Bolt	AN3-14A	4
4.	3/16" Thick Washer	AN960-10	45
5.	Elevator Horn	TG-EH	2
6.	1/4" Bolt	AN4-10	2
7.	1/4" Thick Washer	AN960-416	4
8.	Elevator Trailing Edge	TG-ETE	2
9.	3/16" Bolt	AN3-15A	5
10.	Male Rod End 1/4" x 1/4"	NM-4	2
11.	1/4" Plain Nut	AN345-416	2
12.	1/4" x 5/8" Zinc Plated Washer	KSHW0075	2
13.	1/4" Castle Nut	AN310-4	2
14.	Loc Ring	RL 27 1/4	4
15.	3/16" Nut Plate	K-1000-3	16
16.	3/32" Aluminum Pop Rivet	40APR1/8	40
17.	3/16" Bolt	AN3-13A	14
18.	3/16" Aluminum Pop Rivet - Cherry Q	AAPQ-62	4
19.	Aluminum Internal Brace, 1/2" x .035 x X *	KAAC0005-4	0
20.	3/16" Insert Nut	I-NUT	4
21.	1" Compression Fitting	TC-1	4
22.	Stainless Steel Hinge	W-HB	14
23.	Small Cotter Pin	MS24665-134	8
24.	1" End Cap	1 CAP	6
25.	Elevator Spar	TG-ESPAR	2
26.	3/16" Shear Nut	AN364-1032A	3
27.	1/4" Bolt	AN4-15A	5
28.	1/8" Stainless Steel Pop Rivet - Cherry Q	CCPQ-42	96
29.	Lower AFT Cable	TG-LAC-A	2
30.	Top AFT Cable	TG-TAC-A	2
31.	Top Forward Cable	TG-TFC-A	2
32.	Lower FWD Cable	TG-LFC-A	2
33.	Horizontal Stabilizer Spreader Tube	TG-HS005	2
34.	Horizontal Stabilizer Rib, LH	TG-HS003-LH	1
34.	Horizontal Stabilizer Rib, RH	TG-HS003-RH	1
35.	1/8" Aluminum Pop Rivet - Cherry Q	AAPQ-42	32
36.	1 1/4" Push Pull Tube, 107 1/2"	KPCS0031	1
37.	1/4" Shear Nut	AN364-428A	1
38.	Reinforcement Angle	TG-G002	2
39.	Aluminum Doubler, 7/8" x .058 x 6" *	KAAC0005-6	0
40.	Horizontal Stabilizer Inner Compression Rib - RH	TG-HS006-RH	1
40.	Horizontal Stabilizer Inner Compression Rib - LH	TG-HS006-LH	1

*Builder must fabricate from raw stock.

S-6ES COYOTE II - HORIZONTAL STABILIZER & ELEVATOR CONT.

#	DESCRIPTION	PART NUMBER	QUANTITY
41.	Horizontal Stabilizer Outer Compression Rib - RH	TG-HS007-RH	1
41.	Horizontal Stabilizer Outer Compression Rib - LH	TG-HS007-LH	1
42.	Reinforcement Angle	KPWI0014	2
43.	Elevator Yoke	TG-EY-ES	1
44.	3/16" Single Ear Nut Plate	MS21051-L3	2
45.	3/16" Bolt	AN3-12A	2
46.	Hummertang	T12-HT6	2
47.	3/16" Bolt	AN3-3A	2
48.	3/16" Bolt	AN3-4A	2
49.	3/16" Bolt	AN3-5	2
50.	Aluminum Bushing, 1/4" x .028 x 3/4" *	KAAC0005-2	0
51.	Gusset	U-ST002	4
52.	Gusset	U-ST003	4
53.	Gusset	U-ST004	4
54.	3/16" Bolt	AN3-15	8
55.	3/16" Castle Nut	AN310-3	10
56.	3/16" Tensile Nut	AN365-1032A	6
57.	Horizontal Stabilizer Spar	TG-HS011	2
58.	Horizontal Stabilizer Leading Edge	TG-HS004	2
59.	1/16" Lacing Wires, (stick) 36" x 1/16"	TG-LW-1/16	4
60.	Nylon Lace Up Rope	36 SEINE	50 ft
61.	Reinforcement Angle	KPWI0015	2
62.	Horizontal Stabilizer FWD Attach Bracket	TG-HS010	2
63.	3/32" Aluminum Pop Rivet	40APR1/8	4
64.	Aluminum Compression Tube, 1/2" x .035 x X *	KAAC0005-4	0
65.	1/8" Aluminum Pop Rivet - Cherry Q	AAPQ-41	16
66.	Attach Tang	U-ST001	8

*Builder must fabricate from raw stock.

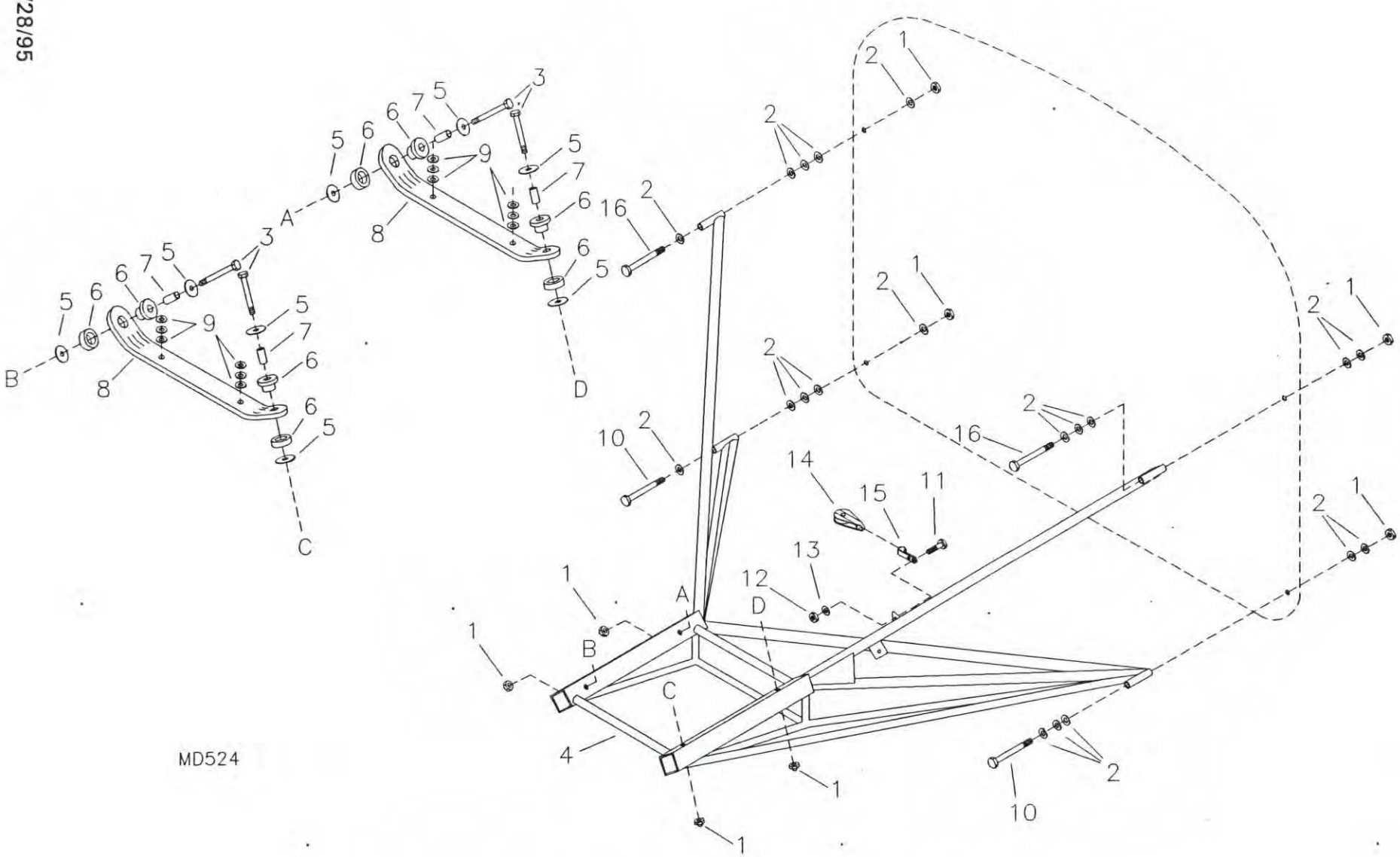

RANS S-6ES COYOTE II
503 AND 582 FOCALIZED ENGINE MOUNT

S-6ES COYOTE II - 503 AND 582 ENGINE MOUNT

#	DESCRIPTION	PART NUMBER	QUANTITY
1.	1/4" Tensile Nut	AN365-428A	8
2.	1/4" Thick Washer	AN960-416	20
3.	1/4" Bolt	AN4-27A	4
4.	Focalized Engine Mount	EG-FM-503/582(6)	1
5.	1/8" Aluminum Washer	EG-AW	8
6.	Barry Mount	22001	4
7.	Aluminum Bushing, 3/8" x .058 x 1 1/8" ***	KAAC0005-3	0
8.	Focalized Mount Plate	EG-FOMP	2
9.	7/16" Thick Washer **	AN960-716	0
10.	1/4" Bolt	AN4-17A	2
11.	3/16" Bolt *	AN3-4A	1
12.	3/16" Shear Nut *	AN364-1032A	1
13.	3/16" Thin Washer *	AN960-10L	1
14.	Pulley *	KSHW0040	1
15.	Jib Strap *	RL-319	1
16.	1/4" Bolt	AN4-30A	2

*Delete with electric starter option.
**See Engine
***Builder must fabricate from raw stock.

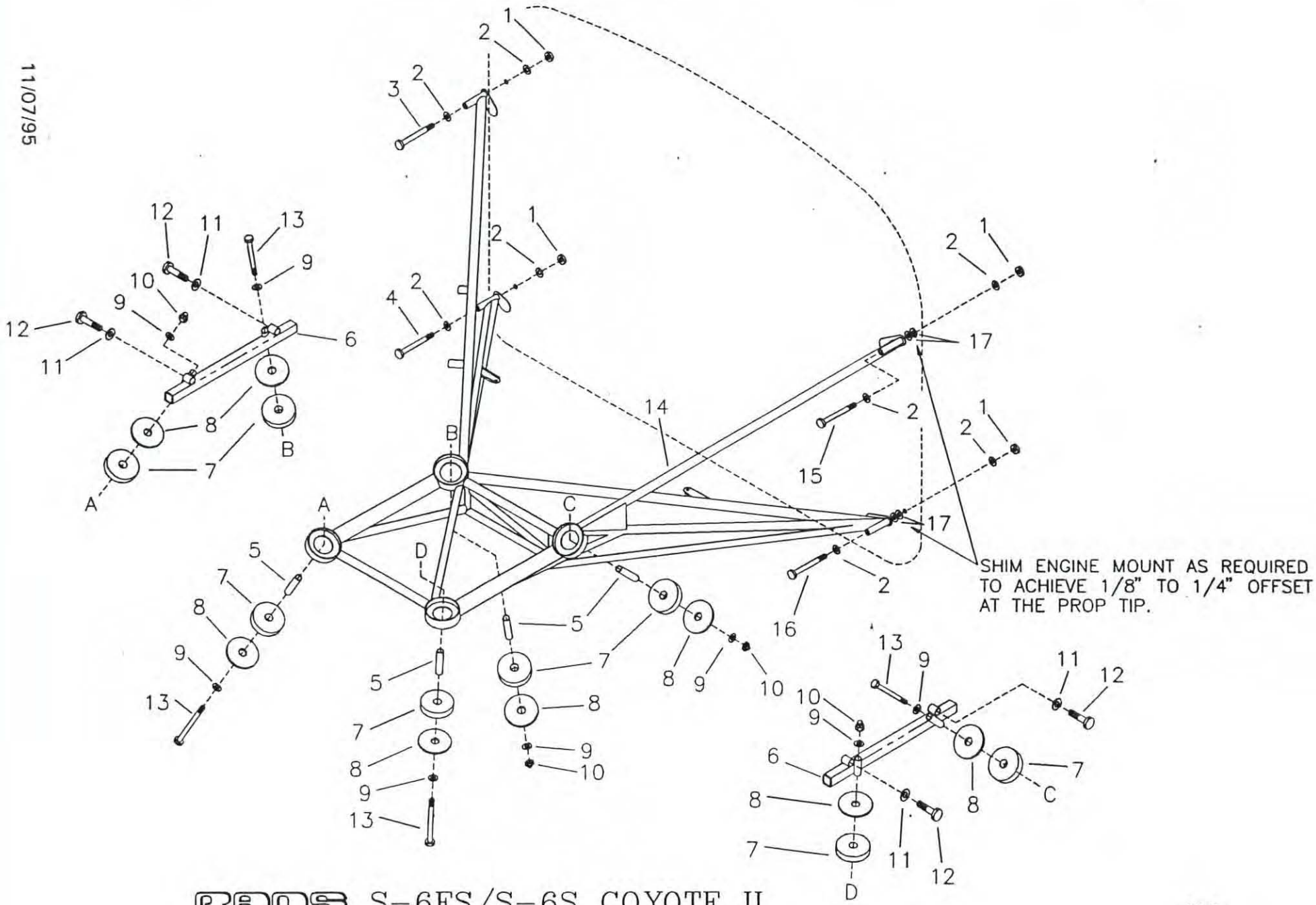

RANS S-6ES/S-6S COYOTE II
912 DYNAFOCAL ENGINE MOUNT

MD646

S-6ES COYOTE II - 912 ENGINE MOUNT

#	DESCRIPTION	PART NUMBER	QUANTITY
1.	1/4" Tensile Nut	AN365-428A	4
2.	1/4" Thin Washer	AN960-416L	8
3.	1/4" Bolt	AN4-26A	1
4.	1/4" Bolt	AN4-16A	1
5.	Bushing	912DONUT-4	4
6.	912 Engine Attachment	EG-FEA-912	2
7.	Rubber Washer	912DONUT-3	8
8.	Washer	912DONUT-2	8
9.	3/8" Thick Washer	AN960-616	8
10.	3/8" Tensile Locnut	MS21045-6	4
11.	10MM Loc Washer	945-753	4
12.	10MM Bolt	875-550	4
13.	3/8" Bolt	AN6-33A	4
14.	912 Focalized Engine Mount	KAPW0014	1
15.	1/4" Bolt	AN4-27A	1
16.	1/4" Bolt	AN4-17A	1
17.	1/4" Thick Washer	AN960-416	4

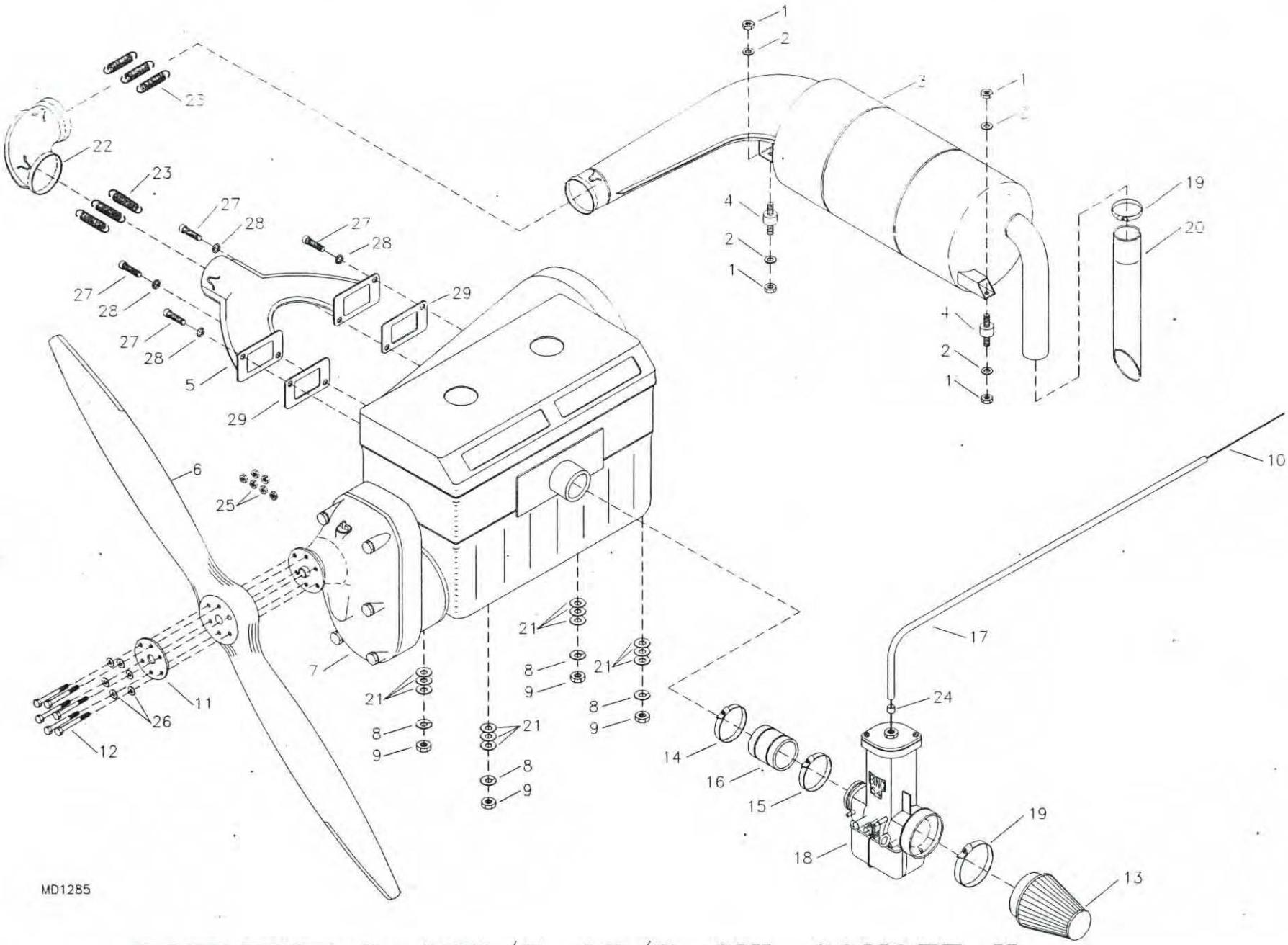

RANS S-6ES/S-6S/S-6XL COYOTE II
503 ENGINE ASSEMBLY

S-6ES COYOTE II - 503 ENGINE

#	DESCRIPTION	PART NUMBER	QUANTITY
1.	1/4" Coarse Thread Nut	EG-1/4NC	4
2.	1/4" Loc Washer	AN935-416L	4
3.	Muffler, 503	EG-MUFF	1
4.	Rubber Isolator	EG-RI	2
5.	Exhaust Manifold, 503	KSEX0008	1
6.	Propeller	EG-PROP	1
7.	Rotax 503 Engine (On Request)	EG-EG-503	1
8.	Loc Washer *	-----	0
9.	Nut *	-----	0
10.	Throttle Cable, 105", 503SC	EG-T-CAB	1
10.	Throttle Cable, 105", 503DC	EG-T-CAB	2
11.	Prop Plate *	-----	0
12.	1/4" Bolt (With Opt. 9" Spinner Only)	AN4-35A	6
12.	1/4" Bolt (STD)(-6 9" Spinner)	AN4-32A	6
13.	Air Filter, K & N (503 SC)	EG-AF	1
13.	Air Filter, K & N (503 DC)	EG-AF	2
14.	Air Filter Clamp **	-----	0
15.	Carb Clamp *	-----	0
16.	Carb Boot *	-----	0
17.	Throttle Cable Housing, 72", 503SC	EG-T-CAB-H	1
17.	Throttle Cable Housing, 72", 503DC	EG-T-CAB-H	2
18.	Bing Carburetor *	-----	0
19.	Hose Clamp, 2 1/4"	5-5228	1
20.	Muffler Extension	EG-MEXT	1
21.	7/16" Thick Washer	AN960-716	12
22.	Muffler Elbow	EG-MUFF-ELBOW-503/582	1
23.	Muffler Springs - 503	EG-MUFF-SPRINGS	6
24.	Cable Ferrule Cap, 503SC	ENDCAP-12000	1
24.	Cable Ferrule Cap, 503DC	ENDCAP-12000	2
25.	1/4" Tensile Nut	AN365-428A	6
26.	1/4" Thick Washer	AN960-416	6
27.	10MM Shoulder Screw *	-----	0
28.	10MM Loc Washer *	-----	0
29.	Exhaust Gasket *	-----	0

*Supplied with Engine.
**Supplied with Filter.

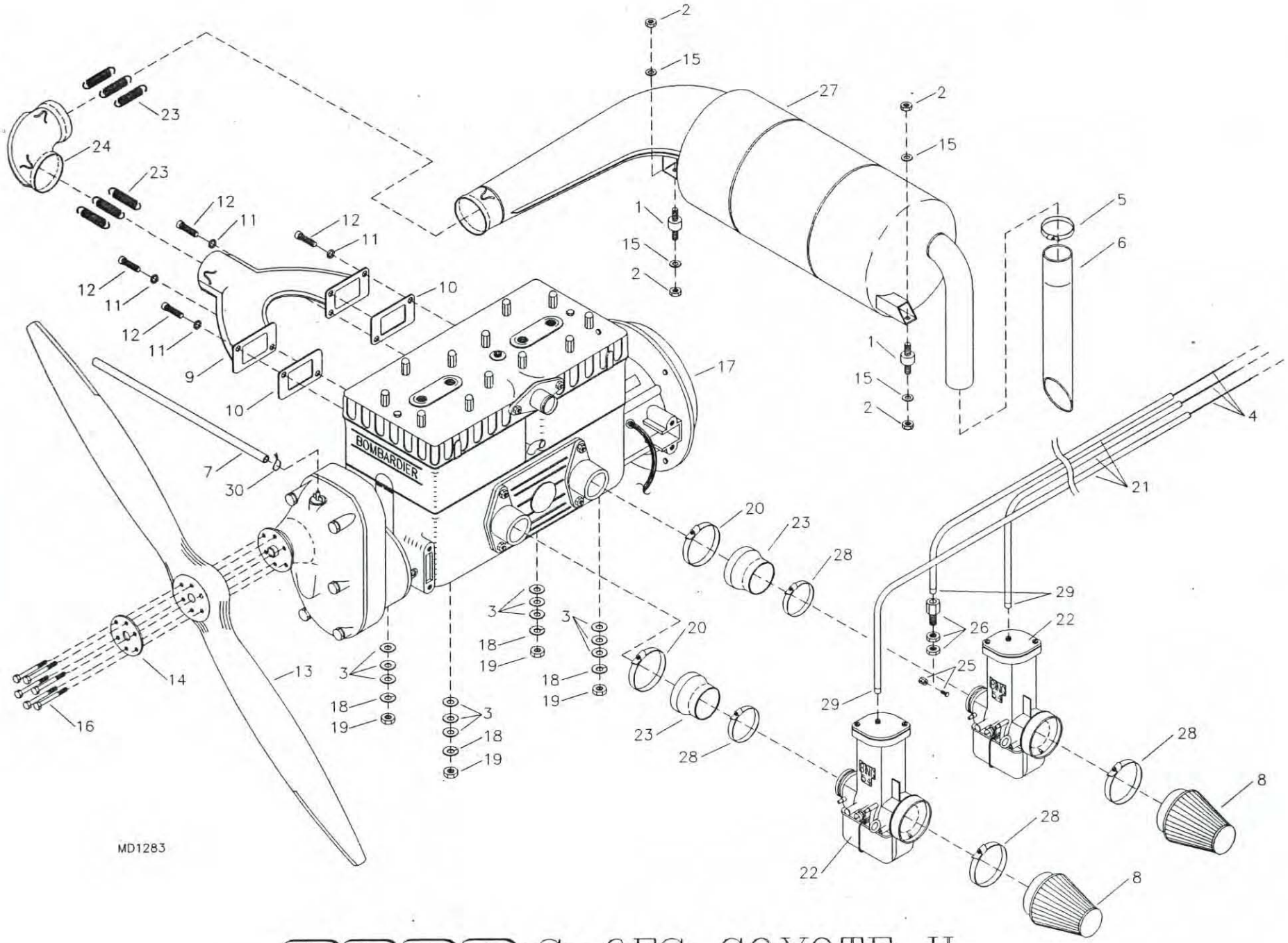

RANS S-6ES COYOTE II
582 ENGINE ASSEMBLY

S-6ES COYOTE II - 582 ENGINE

#	DESCRIPTION	PART NUMBER	QUANTITY
1.	Rubber Isolator	EG-RI	2
2.	1/4" Coarse Thread Nut	EG-1/4NC	4
3.	7/16" Thick Washer	AN960-716	12
4.	Throttle Cable, 105"	EG-T-CAB	3
5.	Hose Clamp, 2 1/4"	5-5228	1
6.	Muffler Extension	EG-MEXT	1
7.	Gear Box Breather Line	KSFS0001	3 ft
8.	Air Filter, K & N	EG-AF	2
9.	Exhaust Manifold, 582	KSEX0007	1
10.	Exhaust Gasket *	-----	0
11.	10MM Loc Washer *	-----	0
12.	10MM Shoulder Screw *	-----	0
13.	Propeller	EG-PROP	1
14.	Prop Plate *	-----	0
15.	1/4" Loc Washer	AN935-416L	4
16.	1/4" Bolt (STD)(-6 9" Spinner)	AN4-32A	6
16.	1/4" Bolt (With Opt. 9" Spinner)	AN4-35A	6
17.	Rotax 582 Engine	EG-EG-582	1
18.	Engine Loc Washer *	-----	0
19.	Engine Stud Nut *	-----	0
20.	Carb Clamp *	-----	0
21.	Throttle Cable Housing, 72"	EG-T-CAB-H	3
22.	Bing Carburetor *	-----	0
23.	Muffler Springs, 582	KSEX0002	6
24.	Muffler Elbow	EG-MUFF-ELBOW-503/582	1
25.	Wire Swivel/Screw Stop	2361	1
26.	Adjustable Cable Ferrule	2373	1
27.	Muffler, 582	EG-MUFF	1
28.	Air Filter Clamp **	-----	0
29.	Cable Ferrule Cap	ENDCAP-12000	3
30.	Safety Wire	SAFETY WIRE	0

*Supplied with Engine.
**Supplied with Filter.

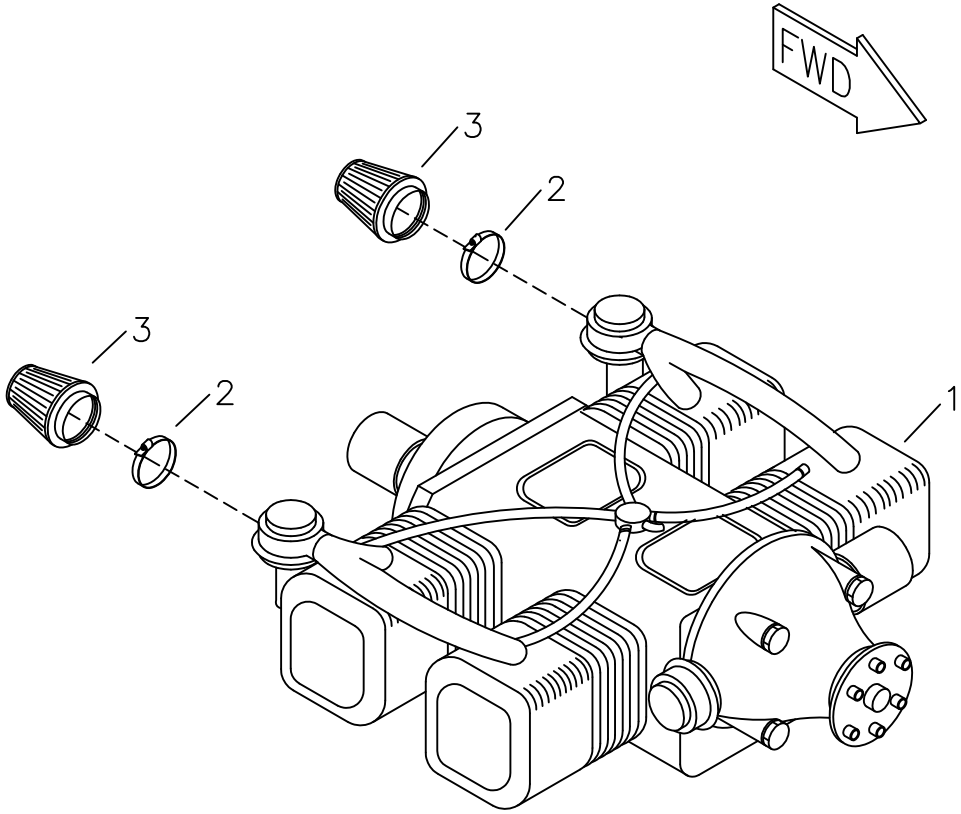

* 912 REFERS TO ROTAX 912 UL
** 912S REFERS TO ROTAX 912 ULS

MD1189

RANS S-6ES COYOTE II 912 UL* / 912 ULS** ENGINE

S-6ES COYOTE II - 912 ENGINE

#	DESCRIPTION	PART NUMBER	QUANTITY
1 .	Rotax 912 Engine (Upon Request)	EG-EG-912	1
2 .	63MM Clamp *	EG-AF-CLAMP	2
3 .	Air Filter	EG-AF-912	2

*Supplied with filter.

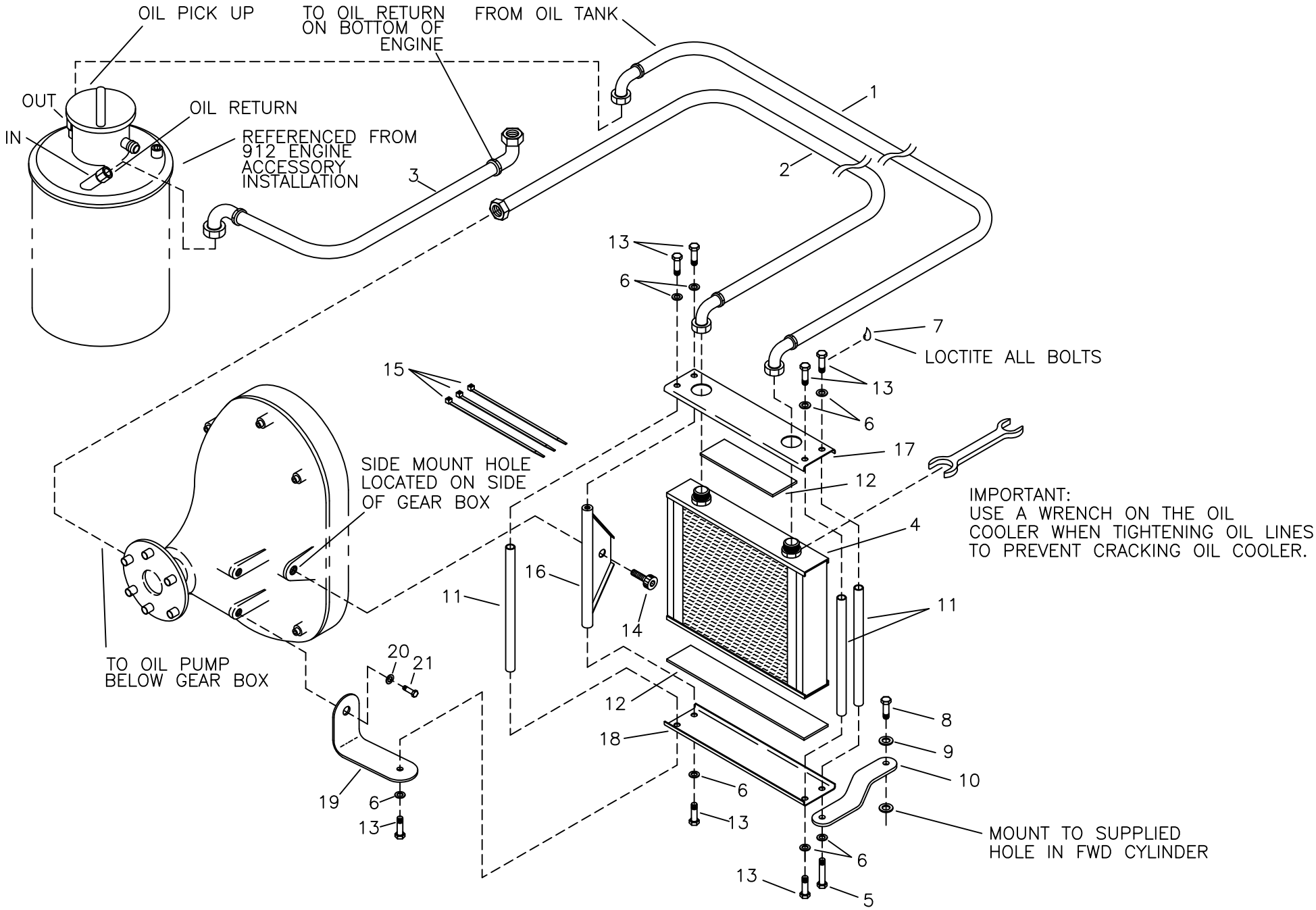

RANS S-6ES COYOTE II
912/912S OIL COOLER ASSEMBLY

MD2553
REV. B

S-6ES COYOTE II - 912/912S OIL COOLER ASSEMBLY

#	DESCRIPTION	PART NUMBER	QUANTITY
1 .	Oil Hose Assembly - Tank to Cooler	KAPW0035	1
2 .	Oil Hose Assembly - Cooler to Pump	KAPW0036	1
3 .	Oil Hose Assembly - Return	KAPW0035	1
4 .	Oil Cooler	21608	1
5 .	3/16" Bolt	AN3-6A	1
6 .	3/16" Thin Washer	AN960-10L	8
7 .	Loctite Blue	LOC-TITE	0
8 .	6MM X 16MM Bolt	M6X16 BOLT	1
9 .	1/4" Thin Washer	AN960-416L	1
10 .	Bent Oil Cooler Mount - Outer	KPPW0259	1
11 .	Threaded Bushing	KPPW0180	3
12 .	.093 Silicone Sheet	KPPW0254	2
13 .	3/16" Bolt	AN3-3A	7
14 .	10MM x 20MM Bolt	M10X20 BOLT	1
15 .	Short Black Nylon Ties	N-TIES	3
16 .	Oil Cooler Mount	KPPW0258	1
17 .	Upper Oil Cooler Mount	KPPW0071	1
18 .	Lower Oil Cooler Mount	KPPW0072	1
19 .	Oil Cooler Mount-FWD	KPPW0260	1
20 .	5/16" Thick Washer	AN960-516	1
21 .	8MM x 20MM Bolt	M8X20 BOLT	1

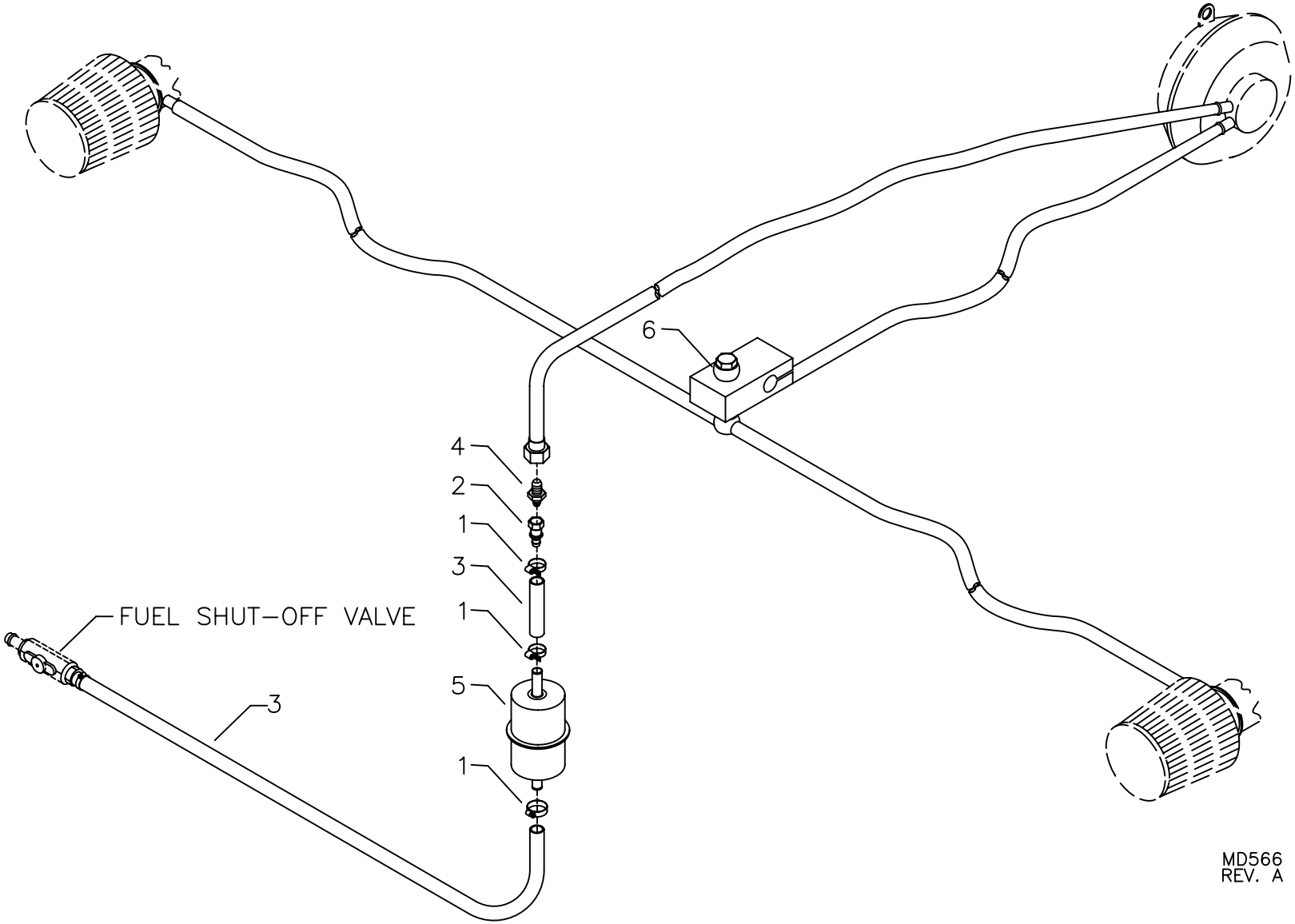

RANS S-6ES COYOTE II
912 FUEL PUMP HOOK UP

S-6ES COYOTE II - 912 FUEL/CARB/PUMP HOOK UP

#	DESCRIPTION	PART NUMBER	QUANTITY
1.	Small Hose Clamp	5-6202	3
2.	Reducer	AN919-6D	1
3.	1/4" Black Fuel Line*	KSFS0002	0
4.	1/4" Hose Fitting	30682-4-4	1
5.	Fuel Filter	33031 / FS-FIL	1
6.	Bushing	BPBK0018	1

* Referenced from Wing Tank Fuel System

0014-11

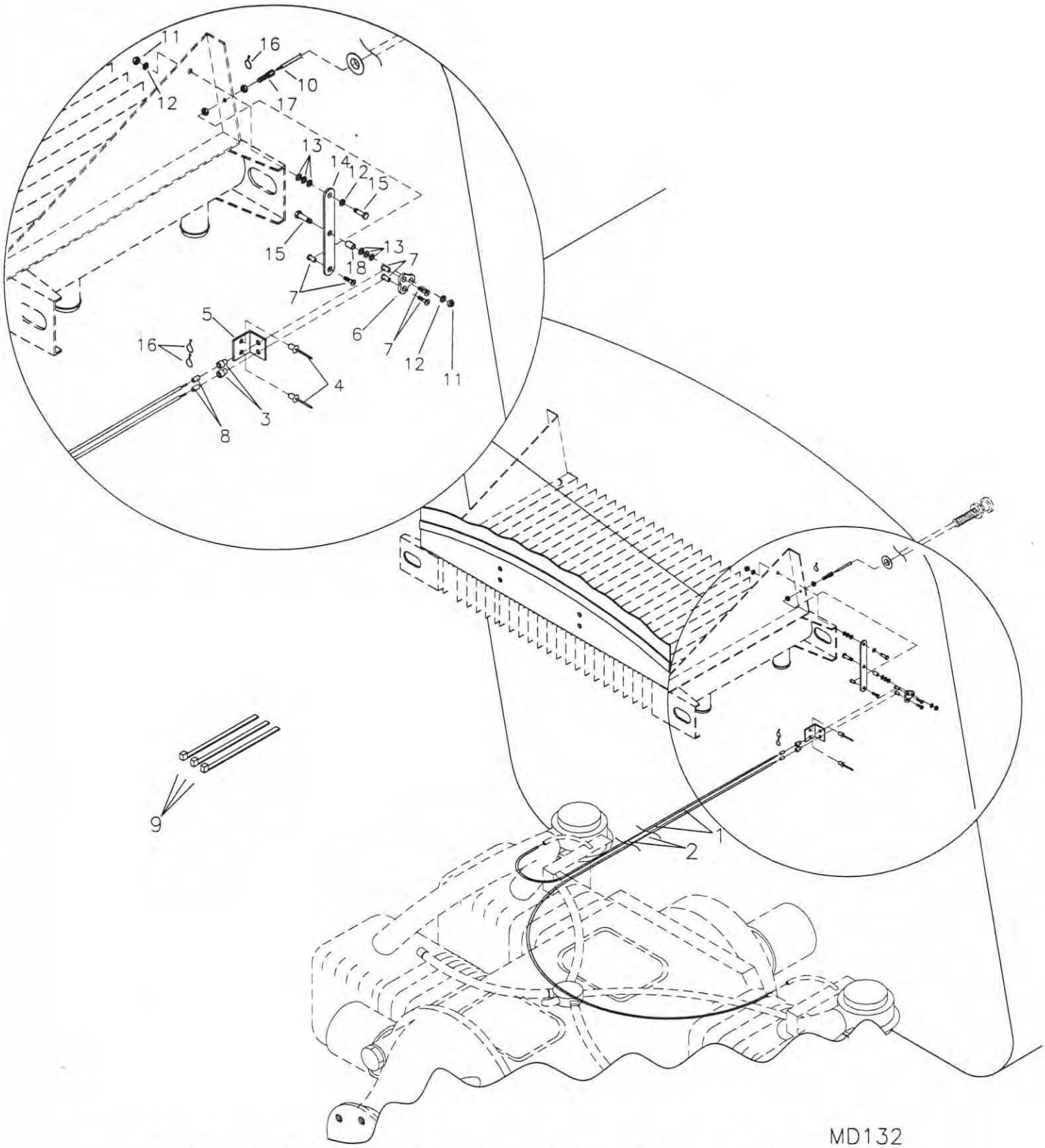

RANS S-6ES COYOTE II 912 CHOKE SYSTEM

10/20/02

S-6ES COYOTE II - CHOKE SYSTEM

#	DESCRIPTION	PART NUMBER	QUANTITY
1.	Cable Housing, 43"	CK-CAB-H	2
2.	Choke Cable	BC-105	2
3.	Cable Conduit Ferrule	2394	3
4.	1/8" Stainless Steel Pop Rivet - Cherry Q	CCPQ-44	4
5.	Double Choke Cable Stop	CK-DCS	1
6.	Choke Mixer Plate	KPPW0076	1
7.	Wire Stop/Screw	2361	3
8.	Cable Ferrule Cap	ENDCAP-12000	2
9.	Zip Ties	ZIP TIES	3
10.	Push Pull Choke Cable	4-336	1
11.	3/16" Shear Nut	AN364-1032A	2
12.	3/16" Thin Washer	AN960-10L	3
13.	3/16" Plastic Washer	PW-3	6
14.	Choke Pivot Arm	KPPW0252	1
15.	3/16" Bolt	AN3-6A	2
16.	Safety Wire	SAFETY WIRE	0
17.	Adjustable Cable Ferrule	12553	1
18.	Aluminum Bushing, 1/4 x .028 x 7/16 *	KAAC0005-2	0

*Fabricate from raw stock.

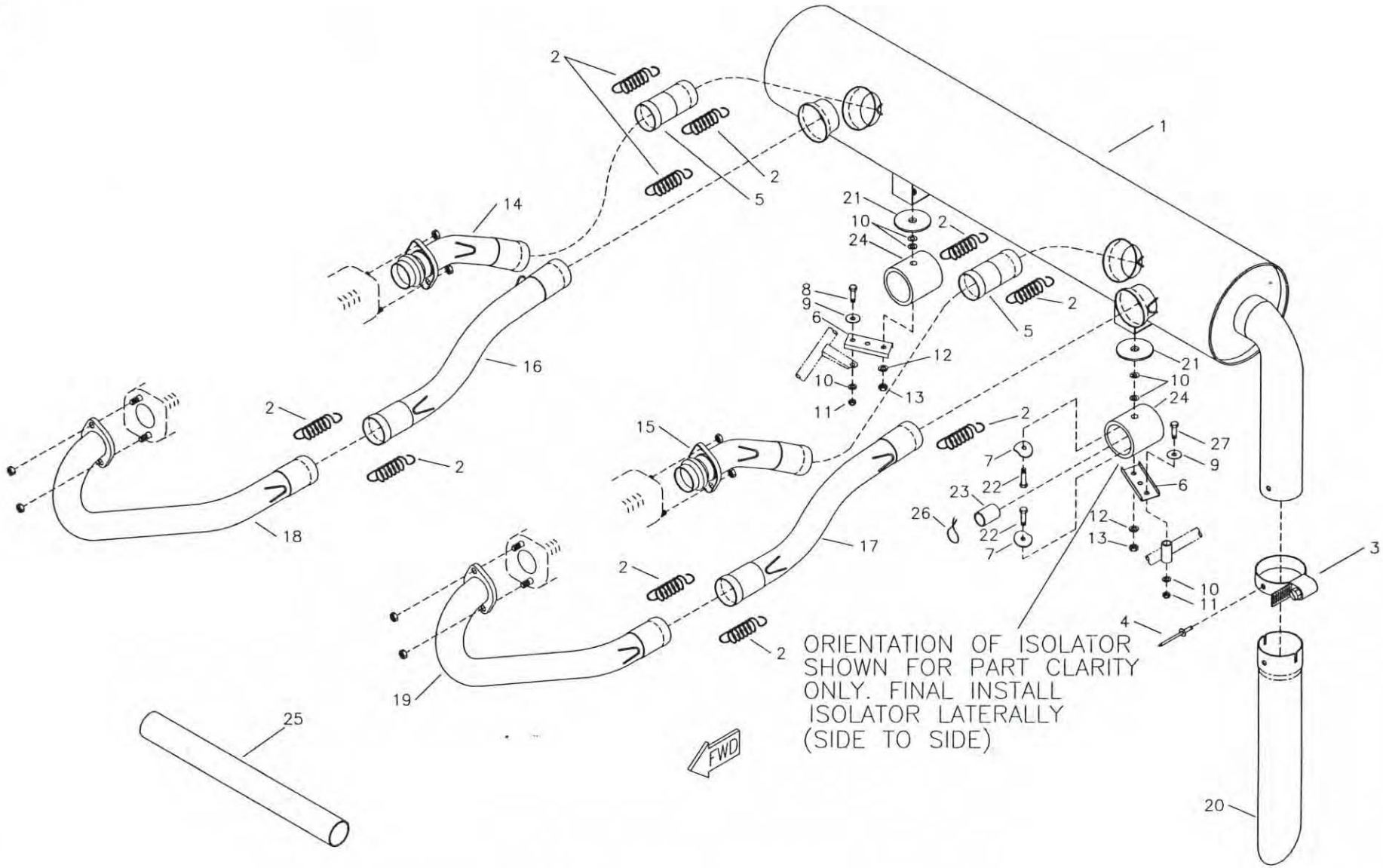

RANS S-6ES COYOTE II
912 MUFFLER ASSEMBLY

MD3230

S-6ES COYOTE II - 912 MUFFLER ASSEMBLY

#	DESCRIPTION	PART NUMBER	QUANTITY
1 .	S-6 912 Muffler	KPEX0002	1
2 .	Muffler Springs - 912	KSEX0002	10
3 .	Hose Clamp, 2 1/4"	5-5228	1
4 .	1/8" Stainless Steel Rivet - Cherry Q	CCPQ-45	1
5 .	Muffler Canister Coupler	KPEX0026	2
6 .	Muffler Attach Channel	KPEX0027	2
7 .	Formed Washer	KPAC0053	4
8 .	1/4" Bolt	AN4-4A	2
9 .	1/4" Large Washer	AN970-4	2
10 .	1/4" Thick Washer	AN960-416	6
11 .	1/4" Shear Nut	AN364-428A	2
12 .	1/4" Loc Washer	AN935-416L	2
13 .	6MM Hex Nut	6MM HEX NUT	2
14 .	AFT Exhaust Manifold, RH	KPEX0025	1
15 .	AFT Exhaust Manifold, LH	KPEX0024	1
16 .	FWD Muffler Manifold #2, RH	KPEX0023	1
17 .	FWD Muffler Manifold #2, LH	KPEX0021	1
18 .	FWD Muffler Manifold #1, RH	KPEX0022	1
19 .	FWD Muffler Manifold #1, LH	KPEX0020	1
20 .	Muffler Extension	KPEX0056	1
21 .	1/8" Aluminum Washer	EG-AW	2
22 .	6MM Bolt	6MMX20MM	4
23 .	Rubber Hose, 3/4" O.D. x 1 3/8" *	KAAC0017-1	0
24 .	Rubber Hose, 1 1/4" O.D. x 1 3/8" *	KAAC0017-2	0
25 .	912 Muffler Raw Stock Kit	KAAC0017	1
26 .	Safety Wire	SAFETY WIRE	0
27 .	1/4" Bolt	AN4-11A	1

*Builder must fabricate from raw stock.

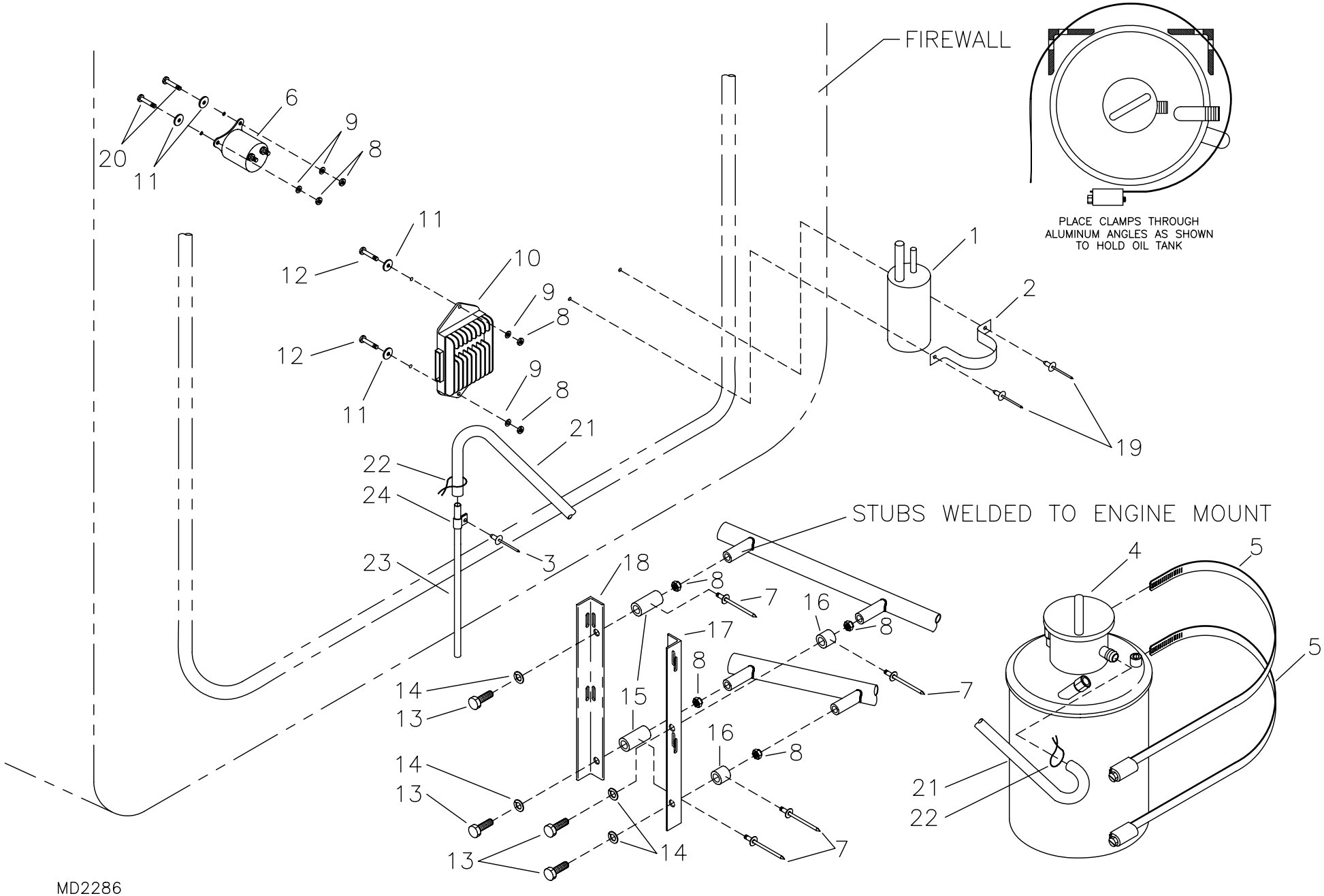

RAMS S-6ES COYOTE II
912/912S ENGINE ACCESSORY INSTALLATION

S-6ES COYOTE II - 912 ACCESSORY INSTALLATION

#	DESCRIPTION	PART NUMBER	QUANTITY
1.	Coolant Recovery Bottle **	-----	0
2.	Coolant Recovery Clamp **	-----	0
3.	3/16" Aluminum Pop Rivet - Cherry Q	AAPQ-62	1
4.	Oil Tank ***	-----	0
5.	Hose Clamp	5-5288	2
6.	Starter Solenoid ***	-----	0
7.	1/8" Stainless Steel Pop Rivet - Cherry Q	CCPQ-41	4
8.	3/16" Shear Nut	AN364-1032A	8
9.	3/16" Thick Washer	AN960-10	4
10.	Regulator Rectifier ***	-----	0
11.	3/16" Large Washer	AN970-3	4
12.	3/16" Bolt	AN3-5A	2
13.	3/16" Truss Head Bolt	AN526-C1032R12	4
14.	3/16" Thin Washer	AN960-10L	4
15.	Oil Tank Attach Bushing, AFT	KPPW0055	2
16.	Oil Tank Attach Bushing, FWD	KPPW0056	2
17.	Oil Tank Aluminum Angle, FWD	KPPW0050	1
18.	Oil Tank Aluminum Angle, AFT	KPPW0051	1
19.	3/16" Aluminum Pop Rivet - Cherry Q **	AAPQ-62	0
20.	3/16" Bolt	AN3-4A	2
21.	3/8" Black Overflow Line	27004	3 ft
22.	Safety Wire	SAFETY WIRE	0
23.	Aluminum Tube, 3/8" x .058 x 12" *	KAAC0005-3	0
24.	Cushioned Tube Clamp	MS21919WDG6	1

*Builder must fabricate from raw stock.
**Referenced from Cooling System.
***Supplied with Engine.

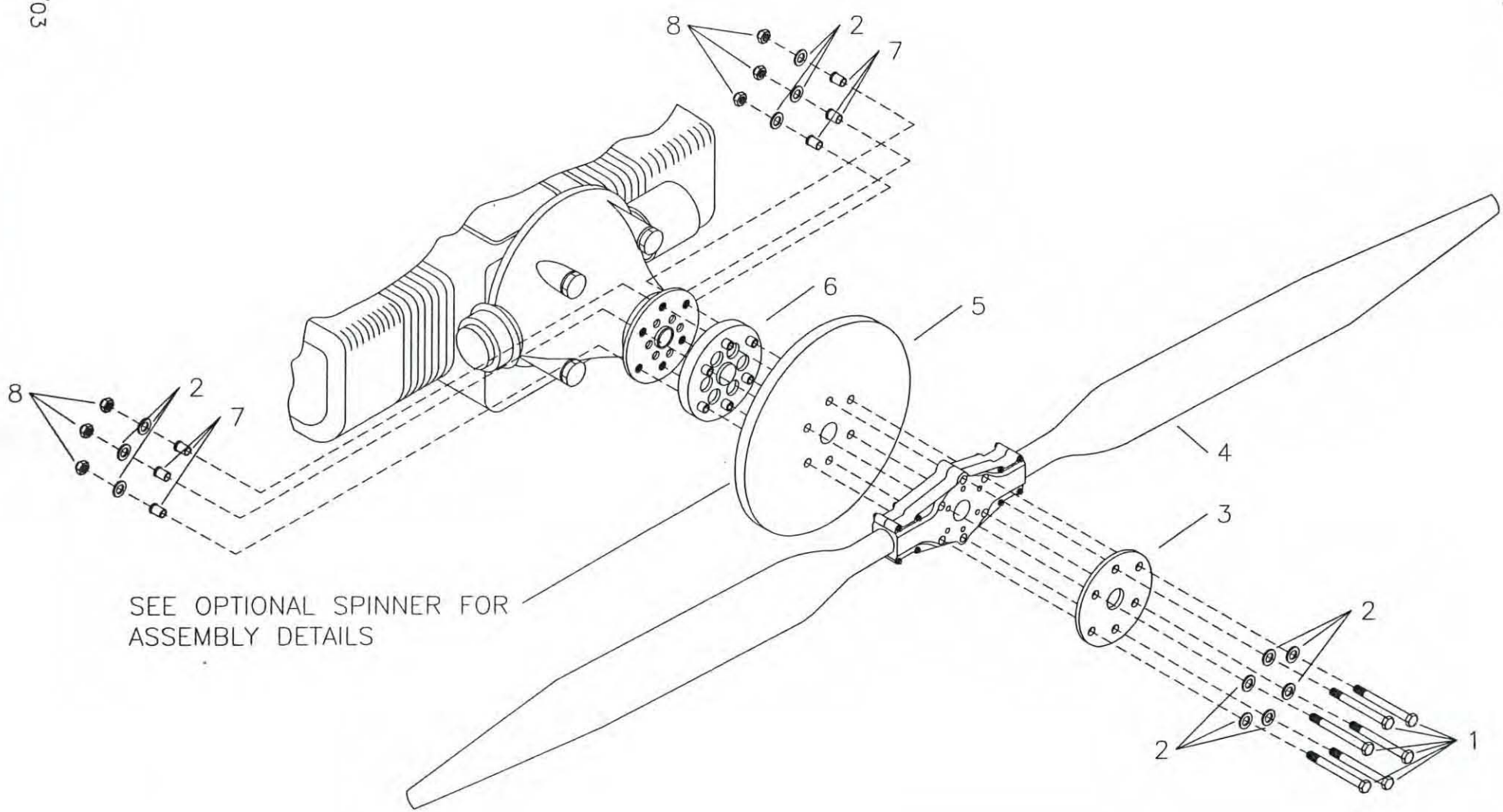

MD1960

RANS S-6ES COYOTE II
912 WARP DRIVE PROP ASSEMBLY
(WITH OPTIONAL SPINNER)

S-6ES COYOTE II - 912/912S OPTIONAL WARP DRIVE PROP W/OPTIONAL 9" SPINNER

#	DESCRIPTION	PART NUMBER	QUANTITY
1.	5/16" Bolt	AN5-44A	6
2.	5/16" Thick Washer	AN960-516	12
3.	Crush Plate, Supplied with 912 Engine	EG-CRUSH-PLATE-912	1
4.	Warp Drive Propeller	KSPW0005	1
5.	Spinner Backing Plate, 9" *	SPIN-BC9-912	0
6.	1" Prop Extension Assembly - 912	KAPW0012	1
7.	Flange Bushing - 912	KPPW0038	6
8.	5/16" Tensile Steel Loc Nut	AN365-524C	6

*Reference from Optional 9" Spinner.

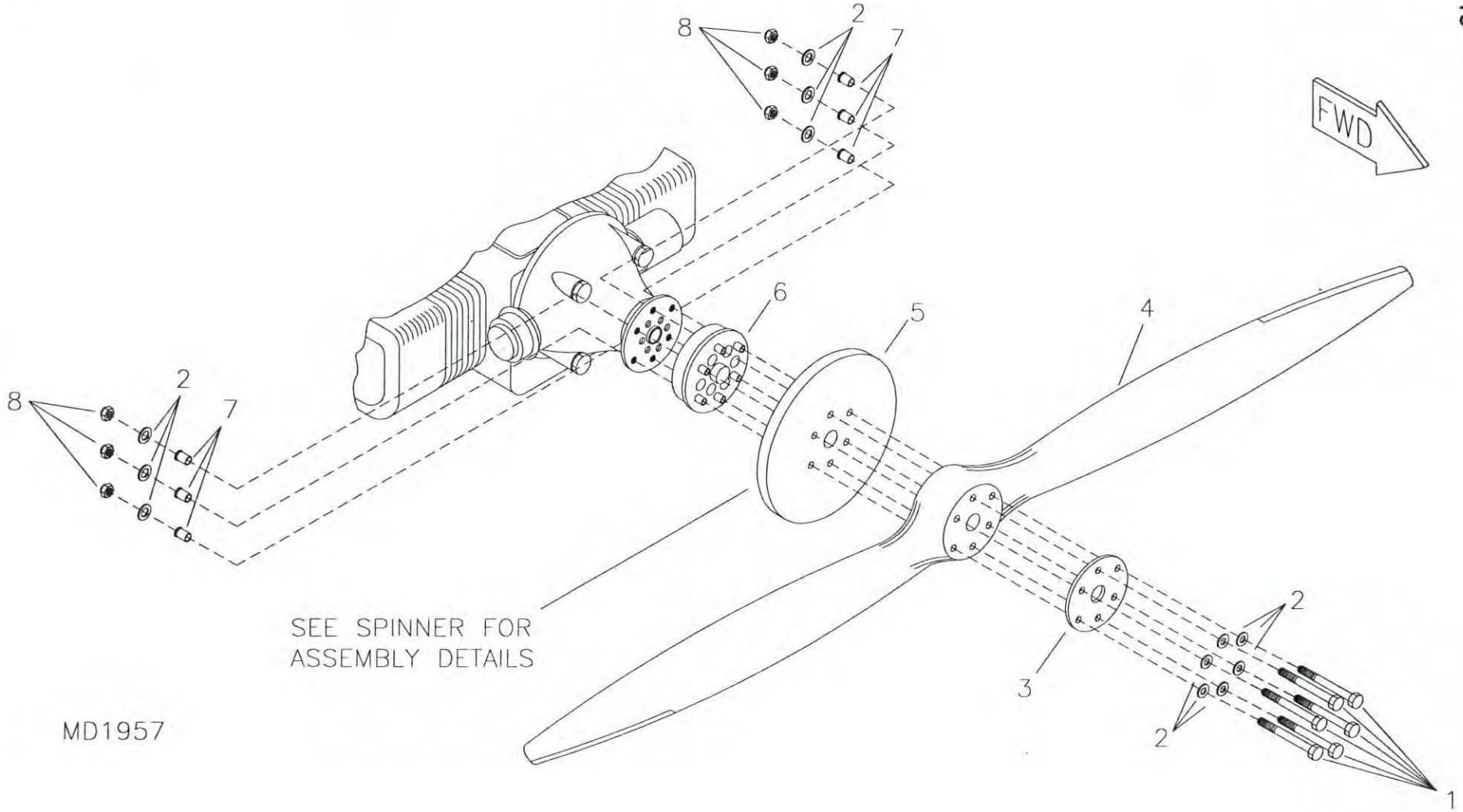

RANS S-6ES COYOTE II
912/912S PROP ASSEMBLY

S-6ES COYOTE II - STD 912/912S PROP ASSEMBLY

#	DESCRIPTION	PART NUMBER	QUANTITY
1.	8MM Bolt, 912/912S (-6 OPT PROP)	M8X1.25X140	6
2.	5/16" Thick Washer, 912/912S (-12 OPT PROP) *	AN960-516	12
3.	Crush Plate, 912/912S (-1 OPT PROP)	KPPW0183	1
4.	912 Propeller (-1 OPT PROP)	KSPW0004	1
4.	912S Propeller (-1 OPT PROP)	KSPW0061	1
5.	Spinner Backing Plate, 912/912S, 12" **	KPPW0042	1
6.	1" Prop Extension Assembly,912/912S (-1 OPT PROP)	KAPW0024	1
7.	Flange Bushing, 912/912S (-6 OPT PROP)	KPPW0038	6
8.	Metric Nut, 912/912S (-6 OPT PROP)	M8X1.25 NUT	6

*Quantity as required.
**Referenced from Spinner Assembly & Installation.

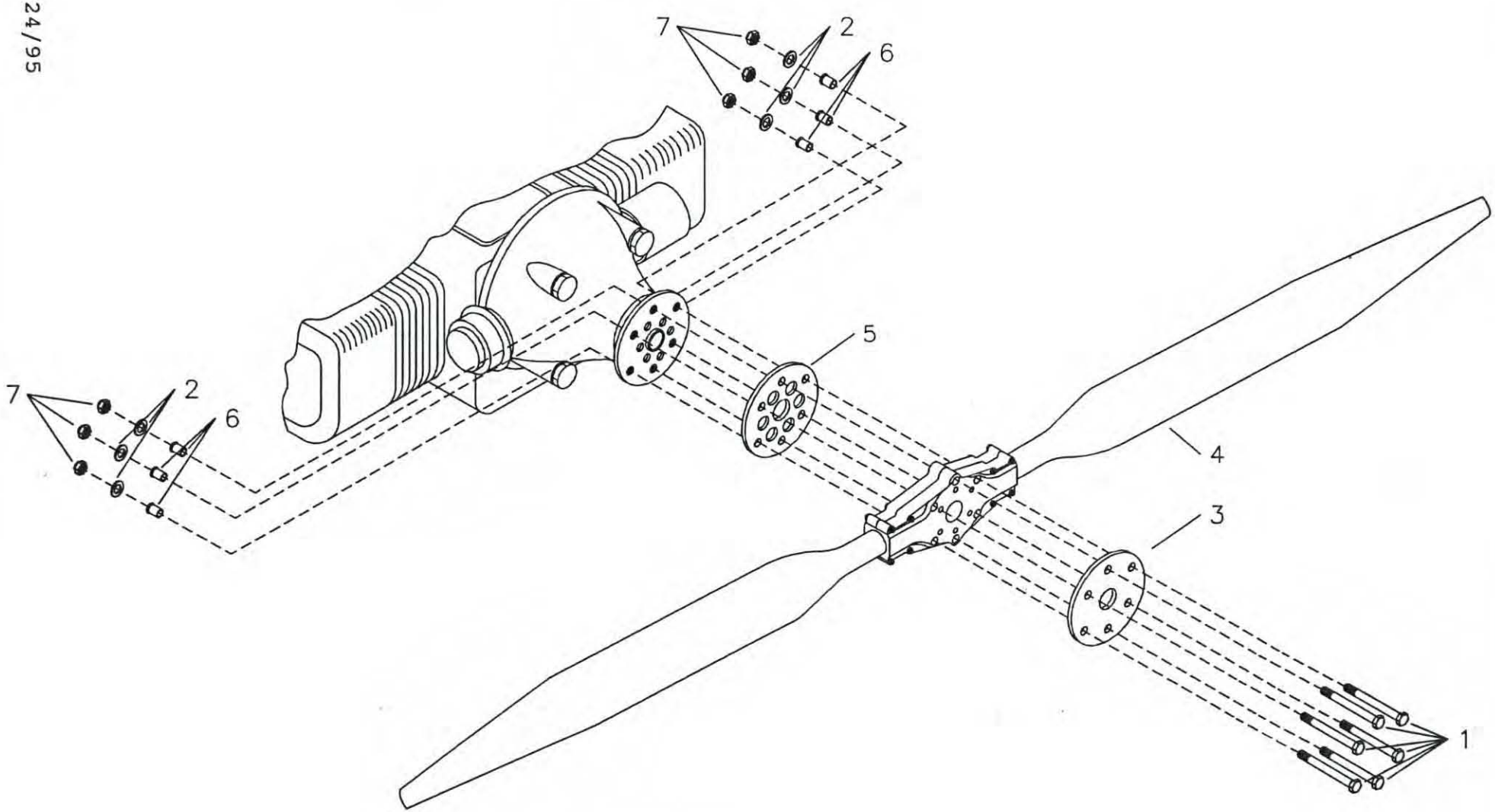

MD1958

RANS S-6ES COYOTE II
912 WARP DRIVE PROP ASSEMBLY

S-6ES COYOTE II - 912 OPTIONAL WARP DRIVE PROP ASSEMBLY
(WITHOUT SPINNER)

#	DESCRIPTION	PART NUMBER	QUANTITY
1 .	5/16" Bolt	AN5-33A	6
2 .	5/16" Thin Washer	AN960-516L	6
3 .	Crush Plate, Supplied with 912 Engine	EG-CRUSH-PLATE-912	1
4 .	Warp Drive Propeller	KSPW0005	1
5 .	1/8" Prop Spacer - 912	KPPW0041	1
6 .	Flange Bushing - 912	KPPW0038	6
7 .	5/16" Steel Insert Tensile Locnut	AN365-524C	6

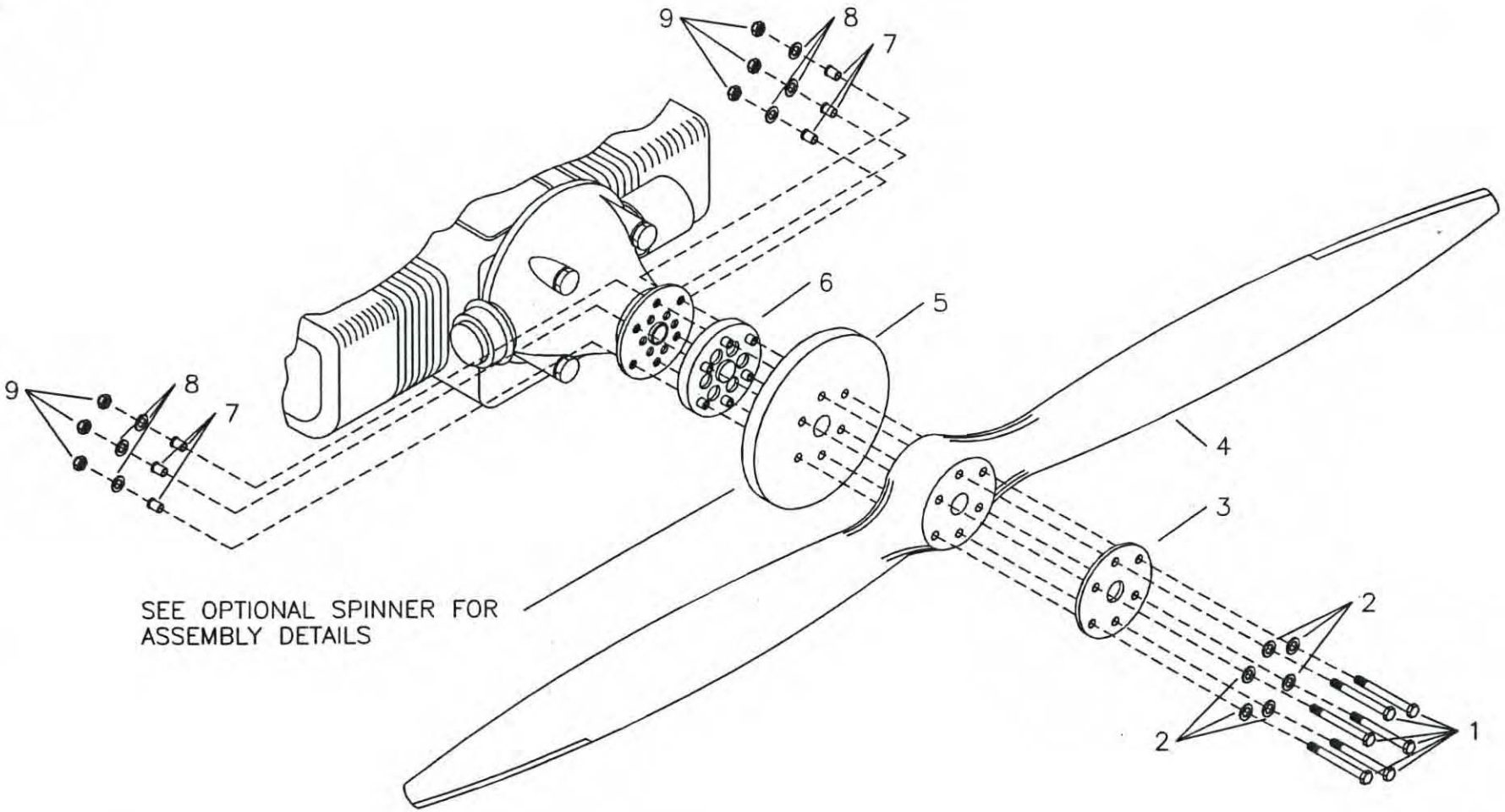

MD1959

RANS S-6ES COYOTE II
912 TENNESSEE PROP ASSEMBLY
(WITH OPTIONAL SPINNER)

S-6ES COYOTE II - 912 TENNESSEE PROP WITH OPTIONAL 9" SPINNER

#	DESCRIPTION	PART NUMBER	QUANTITY
1 .	8MM Bolt	M8X1.25X130	6
2 .	5/16" Thin Washer	AN960-516L	6
3 .	Crush Plate, Supplied with 912 Engine	EG-CRUSH-PLATE-912	1
4 .	Tennessee Propeller	KSPW0004	1
5 .	Spinner Backing Plate, 9" *	SPIN-BC9-912	0
6 .	1" Prop Extension Assembly - 912	KAPW0012	1
7 .	Flange Bushing - 912	KPPW0038	6
8 .	5/16" Thick Washer	AN960-516	6
9 .	Metric Nut	M8X1.25 NUT	6

*Reference from Optional 9" Spinner.

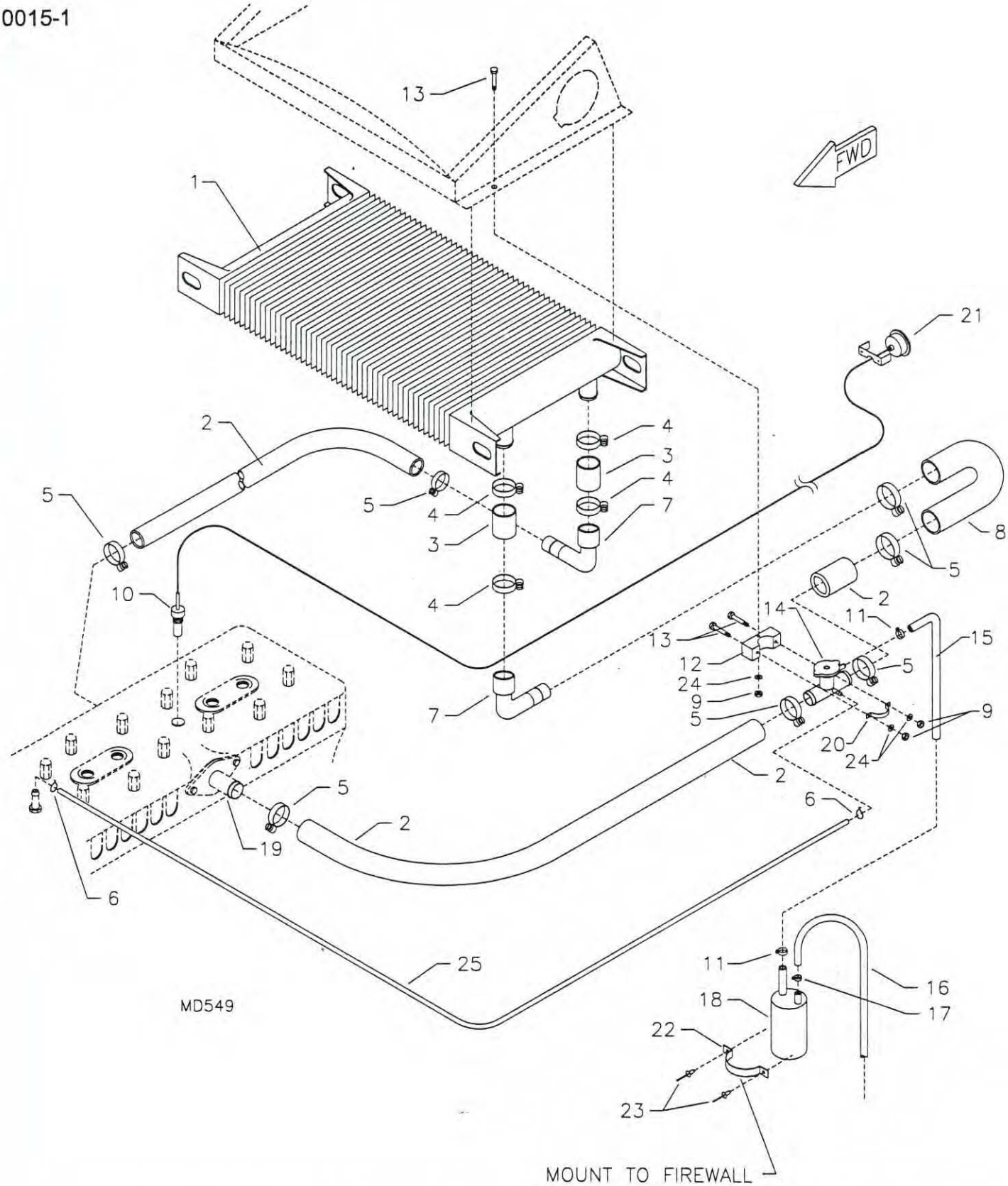

RANS S-6ES\S-6S COYOTE II
582 COOLING SYSTEM

S-6ES COYOTE II - 582 COOLING SYSTEM

#	DESCRIPTION	PART NUMBER	QUANTITY
1.	Radiator	EGCS-RAD	1
2.	1" Radiator Hose	RADIATOR HOSE	76 in
3.	1 1/4" Radiator Hose	EGCS-RHOSE	2
4.	Hose Clamp, 1 3/4"	5-5220	4
5.	Hose Clamp, 1 1/2"	5-5216	8
6.	Safety Wire	SAFETY WIRE	0
7.	Reducer Elbow	EGCS-RC-90	2
8.	Pre-Formed Radiator "V" Hose	KSPW0075	1
9.	3/16" Shear Nut	AN364-1032A	3
10.	Water Temperature Probe ***	KSPW0016-1	0
11.	Line Clamp, 3/8" *	FS-LCL 3/8	1
12.	Mount Block	EGCS-FNMPVC	1
13.	3/16" Bolt	AN3-13A	3
14.	Filler Cap Tee	EGCS-FCT-N	1
15.	5/16" Overflow Hose	EGCS-OFH	14 in
16.	1/4" Fuel/Pitot/Static Line, Blue	FS-FL	2 ft
17.	Line Clamp, 5/16" I.D. *	FS-LCL 5/16ID	1
18.	Coolant Recovery Bottle	EGCS-CRB	1
19.	Water Outlet Socket	922-025	1
20.	Filler "T" Mount	EGCS-FNSTRAP	1
21.	Water Temperature Gauge Electrical **	KSPW0016	0
22.	Coolant Recovery Clamp	FS-HS	1
23.	3/16" Aluminum Pop Rivet - Cherry Q	AAPQ-62	2
24.	3/16" Thick Washer	AN960-10	3
25.	1/8" Black Fuel Coolant Pressure Line	KSFS0001	5 ft

*Two sizes of fuel line clamps are used. Please pay close attention to where used.
To tell what size a clamp is, close the clamp completely & measure across inside diameter.
They should be 5/16" or 3/8" depending on the clamp. **Reference electrical system. *** Suppli

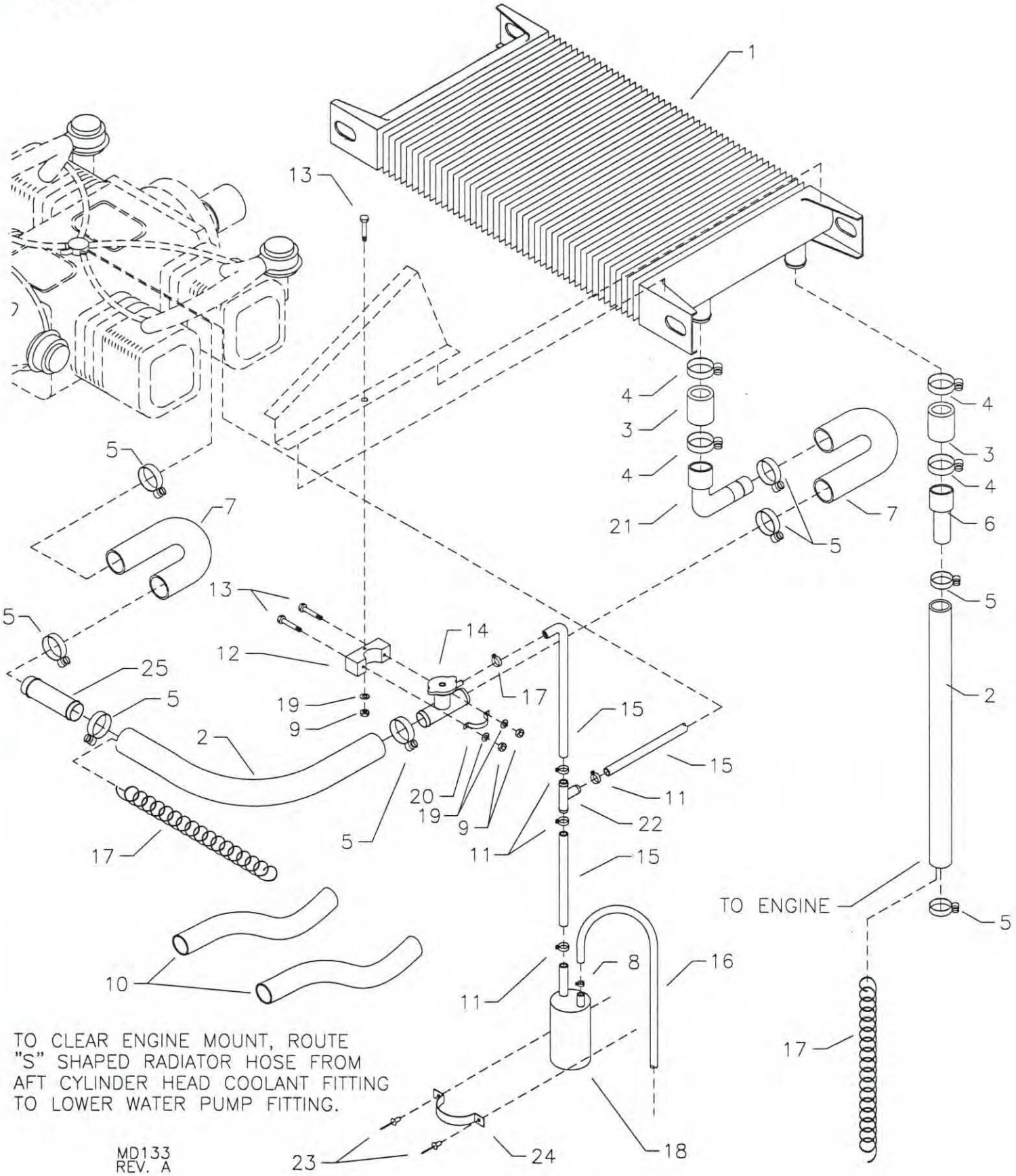

RANS S-6ES COYOTE II

912 COOLING SYSTEM

S-6ES COYOTE II - 912/912S COOLING SYSTEM

#	DESCRIPTION	PART NUMBER	QUANTITY
1.	Radiator	EGCS-RAD	1
2.	1" Radiator Hose	RADIATOR HOSE	60 in
3.	1 1/4" Radiator Hose	EGCS-RHOSE	2
4.	Hose Clamp, 1 3/4"	5-5220	4
5.	Hose Clamp, 1 1/2"	5-5216	8
6.	Reducer Coupling	EGCS-RC	1
7.	Pre-Formed Radiator "V" Hose	KSPW0075	2
8.	Line Clamp, 5/16" I.D. *	FS-LCL 5/16ID	4
9.	3/16" Shear Nut	AN364-1032A	3
10.	Pre-Formed Radiator "S" Hose	KSPW0025	2
11.	Line Clamp, 3/8" *	FS-LCL 3/8	4
12.	Mount Block	EGCS-FNMPVC	1
13.	3/16" Bolt	AN3-13A	3
14.	Filler Cap Tee	EGCS-FCT	1
15.	5/16" Overflow Hose	EGCS-OFH	48 in
16.	1/4" Fuel/Pitot/Static Line, Blue	FS-FL	2 ft
17.	Hose Spring	EGCS-HS	2
18.	Coolant Recovery Bottle	EGCS-CRB	1
19.	3/16" Thick Washer	AN960-10	3
20.	Filler "T" Mount	EGCS-FNSTRAP	1
21.	Reducer Elbow	EGCS-RC-90	1
22.	Coolant Recovery Tee 5/16	3-71350	1
23.	3/16" Aluminum Pop Rivet - Cherry Q	AAPQ-62	2
24.	Coolant Recovery Clamp	FS-HS	1
25.	Cooling Tube-Union	KPPW0189	1

*Two sizes of fuel line clamps are used. Please pay close attention to where used.
To tell what size a clamp is, close the clamp completely & measure across inside diameter.
They should be 5/16" or 3/8" depending on the clamp.

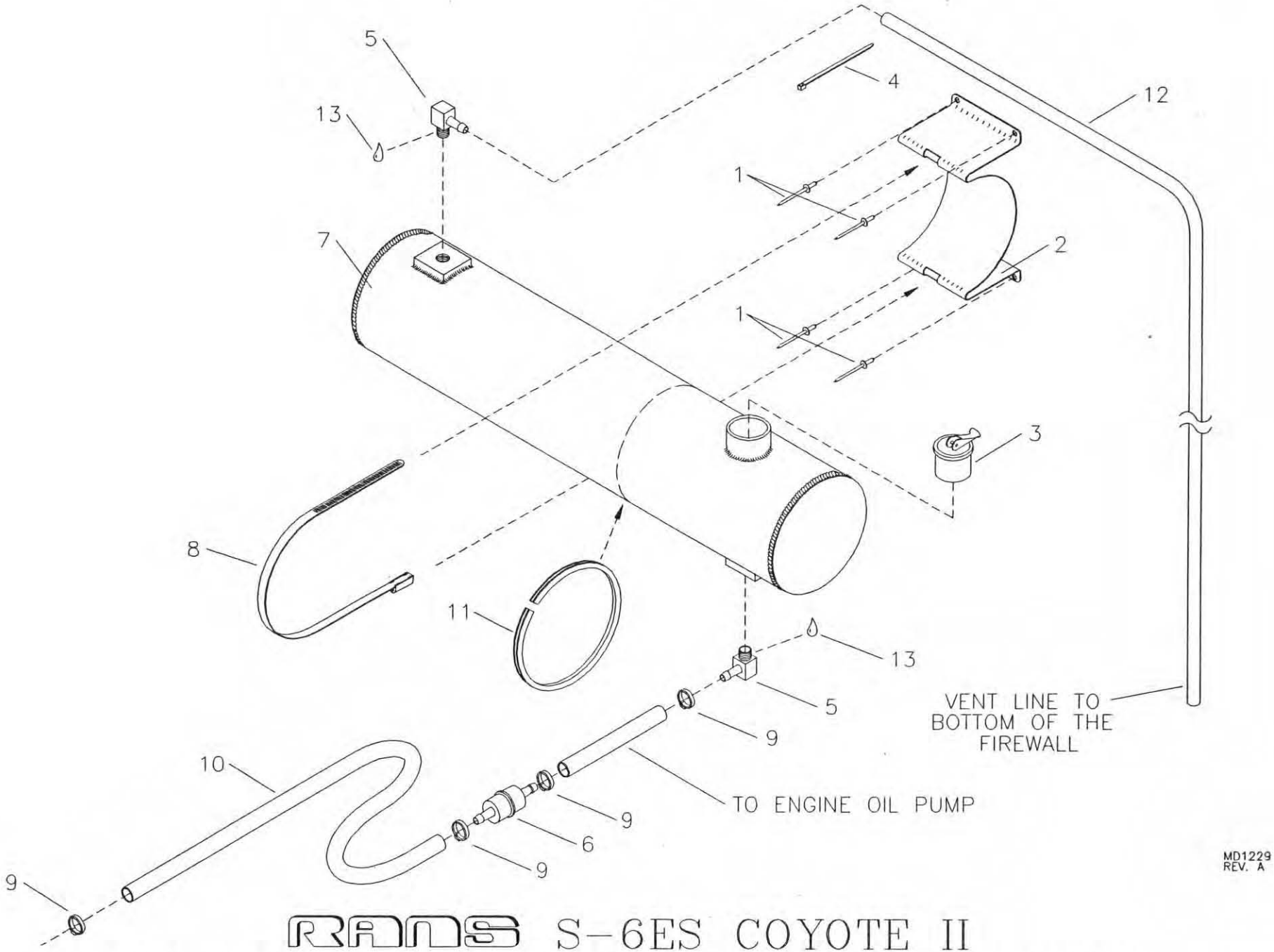

RANS S-6ES COYOTE II
582 OIL INJECTION TANK MOUNT ASSEMBLY

S-6ES COYOTE II - 582 OIL INJECTION TANK MOUNT

#	DESCRIPTION	PART NUMBER	QUANTITY
1 .	1/8" Stainless Steel Pop Rivet - Cherry Q	CCPQ-42	4
2 .	Oil Tank Strap	EGCS-OTS	1
3 .	7/8" Expansion Cap	2598K29	1
4 .	Zip Ties	ZIP TIES	1
5 .	90 Withdrawal Fitting	8342	1
6 .	Oil Filter	414-5365	1
7 .	Oil Tank	OI-TANK	1
8 .	2 3/4" to 4" Hose Clamp	5-5256	1
9 .	Line Clamp, 3/8" *	FS-LCL 3/8	4
10 .	1/4" Fuel/Pitot/Static Line, Blue	FS-FL	2 ft
11 .	Rubber Trim	X1011	11 in
12 .	1/4" Fuel/Pitot/Static Line, Blue	FS-FL	3 ft
13 .	Loctite Blue	LOC-TITE	0

*Two sizes of fuel line clamps are used. Please pay close attention to where used.
To tell what size a clamp is, close the clamp completely & measure across inside diameter.
They should be 5/16" or 3/8" depending on the clamp.

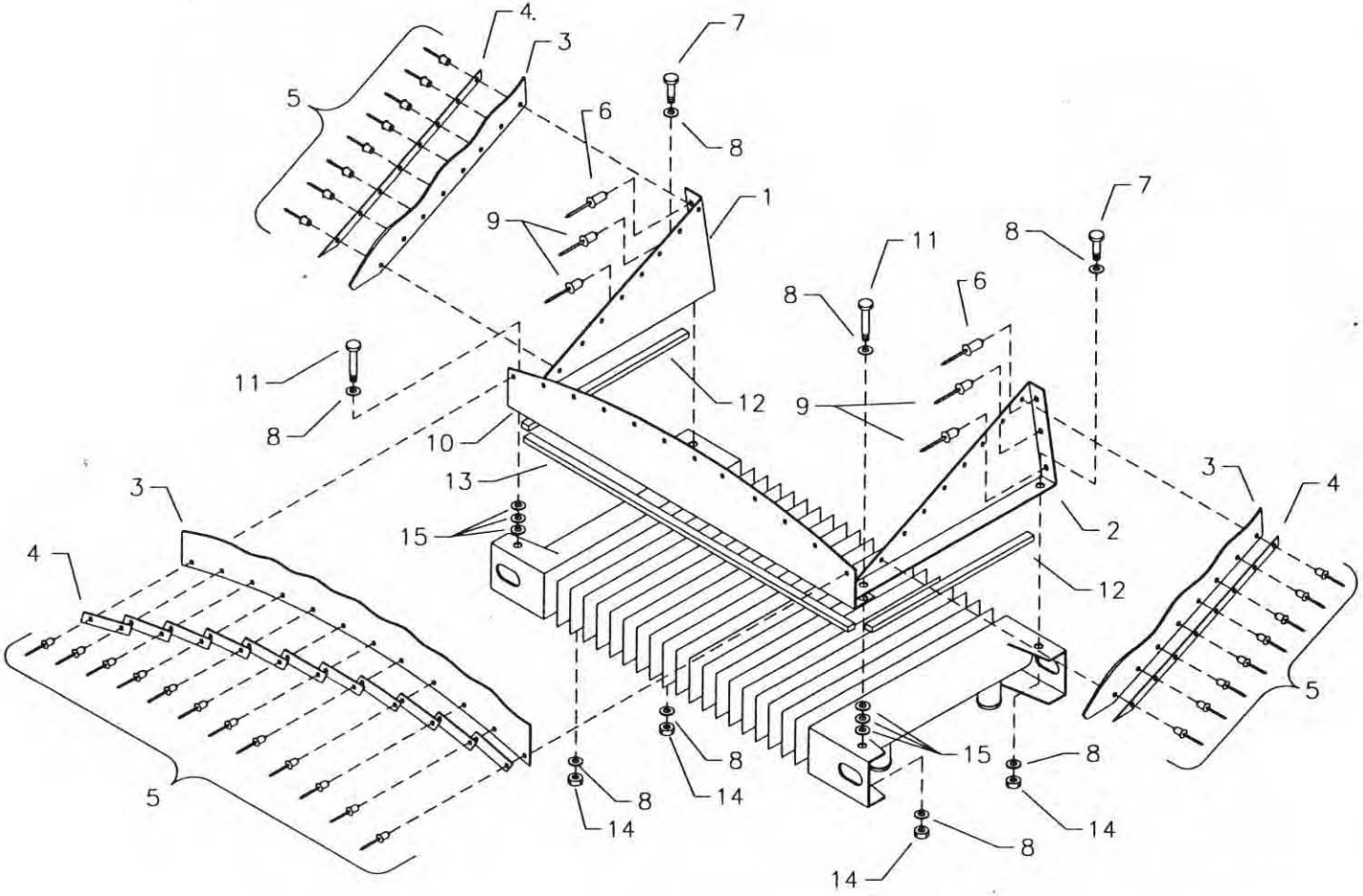

MD214
REV. A

RANS S-6ES COYOTE II
582 SLANT RADIATOR MOUNT

S-6ES COYOTE II - SLANT RADIATOR MOUNT

#	DESCRIPTION	PART NUMBER	QUANTITY
1.	Radiator Mount Attach Angle, Right	EGCS-RMAA-R	1
2.	Radiator Mount Attach Angle, Left	EGCS-RMAA-L	1
3.	2" Wide Neoprene Gap Seal, 52" *	2GS-52	1 in
4.	Aluminum Strip 1/2" x .020 x X **	KAAC0005-7	0
5.	1/8" Aluminum Pop Rivet - Cherry Q	AAPQ-42	30
6.	3/16" Stainless Steel Pop Rivet - Cherry Q	CCPQ-64	2
7.	3/16" Bolt	AN3-4A	2
8.	3/16" Thin Washer	AN960-10L	8
9.	1/8" Stainless Steel Pop Rivet - Cherry Q	CCPQ-42	4
10.	Radiator Forward Seal, Type 2	EGCS-RFS-2	1
11.	3/16" Bolt	AN3-6A	2
12.	Foam Strip, 3/16" x 3/8" x 25"	3/16-FS	2
13.	Foam Strip, 3/8" x 1/2" x 24"	3/8-FS	2
14.	3/16" Shear Nut	AN364-1032A	4
15.	3/16" Thick Washer	AN960-10	6

*Refer to figure for installation.
**Builder must fabricate from raw stock.

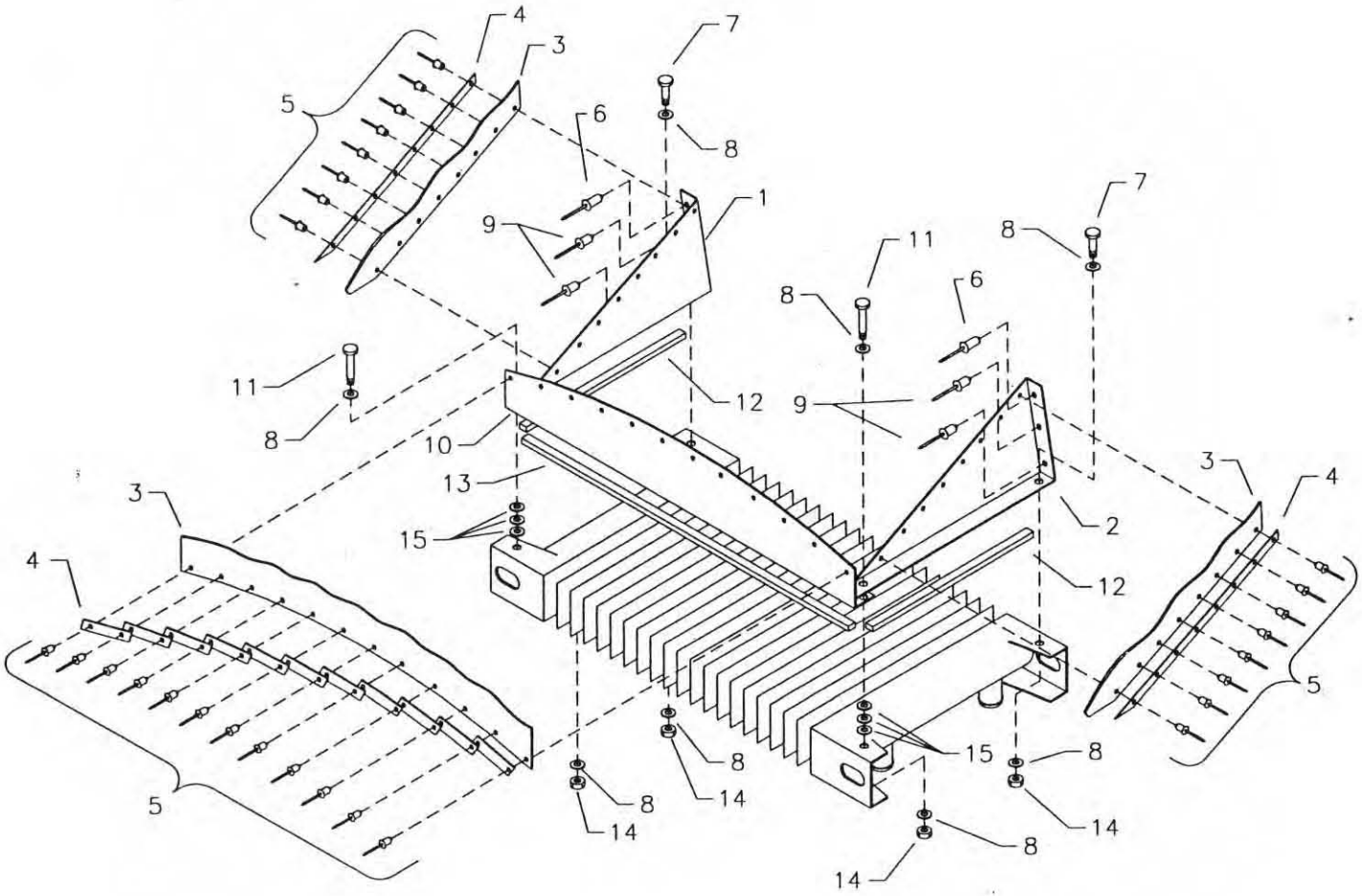

MD3237

RANS S-6ES COYOTE II
912 SLANT RADIATOR MOUNT

S-6ES COYOTE II - 912 SLANT RADIATOR MOUNT

#	DESCRIPTION	PART NUMBER	QUANTITY
1.	Radiator Mount Attach Angle, Right	EGCS-RMAA-R	1
2.	Radiator Mount Attach Angle, Left	EGCS-RMAA-L-912	1
3.	2" Wide Neoprene Gap Seal, 52" *	2GS-52	1
4.	Aluminum Strip, 1/2" x .020 x X **	KAAC0005-7	0
5.	1/8" Aluminum Pop Rivet - Cherry Q	AAPQ-42	30
6.	3/16" Stainless Steel Pop Rivet - Cherry Q	CCPQ-64	2
7.	3/16" Bolt	AN3-4A	2
8.	3/16" Thin Washer	AN960-10L	8
9.	1/8" Stainless Steel Pop Rivet - Cherry Q	CCPQ-42	4
10.	Radiator Forward Seal, Type 2	EGCS-RFS-2	1
11.	3/16" Bolt	AN3-6A	2
12.	Foam Strip, 3/16" x 3/8" x 25"	3/16-FS	2
13.	Foam Strip, 3/8" x 1/2" x 24"	3/8-FS	2
14.	3/16" Shear Nut	AN364-1032A	4
15.	3/16" Thick Washer	AN960-10	6

*Refer to figure for installation.
**Builder must fabricate from raw stock.

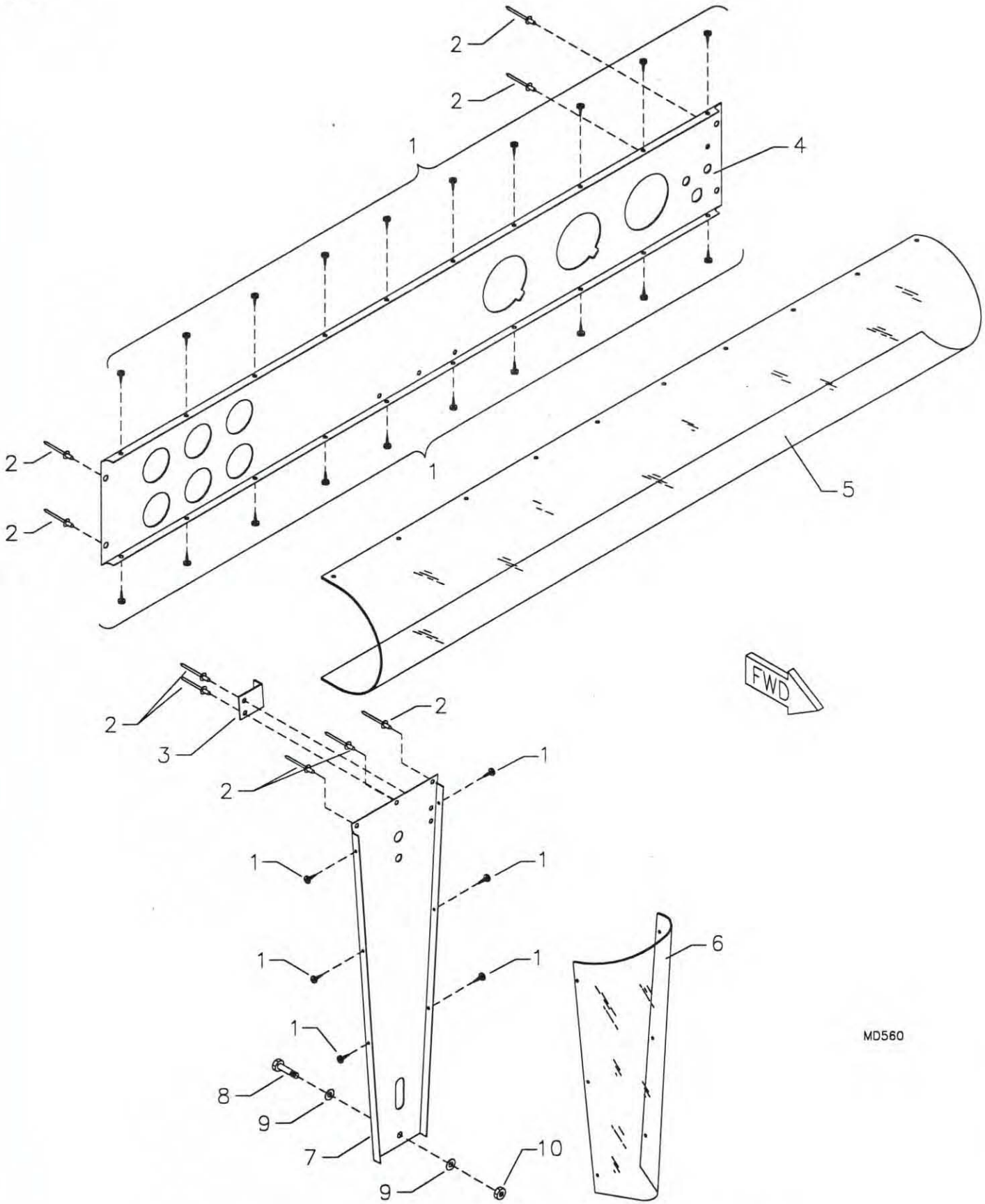

RANS S-6ES COYOTE II
INSTRUMENT PANEL ASSEMBLY

S-6ES COYOTE II - INSTRUMENT PANEL

#	DESCRIPTION	PART NUMBER	QUANTITY
1.	#8 Pan Head Screw	8X1/2 PHS	14
2.	1/8" Stainless Steel Pop Rivet - Cherry Q	CCPQ-42	10
3.	Starter Handle Hook (503/582) Non-Electric Start	S2-SHH	1
4.	Instrument Panel (Optional Blank)	KPIP0077	1
4.	Instrument Panel (STD Cutout)	KPIP0072	1
5.	Instrument Panel Cover	IP-COV-ES	1
6.	Dust Cover Lower	IP-DCL-S6ES	1
7.	Lower Panel	KPIP0073	1
8.	3/16" Bolt	AN3-4A	1
9.	3/16" Thick Washer	AN960-10	2
10.	3/16" Shear Nut	AN364-1032A	1

See OPTIONS Section for optional AVIONICS Panel.

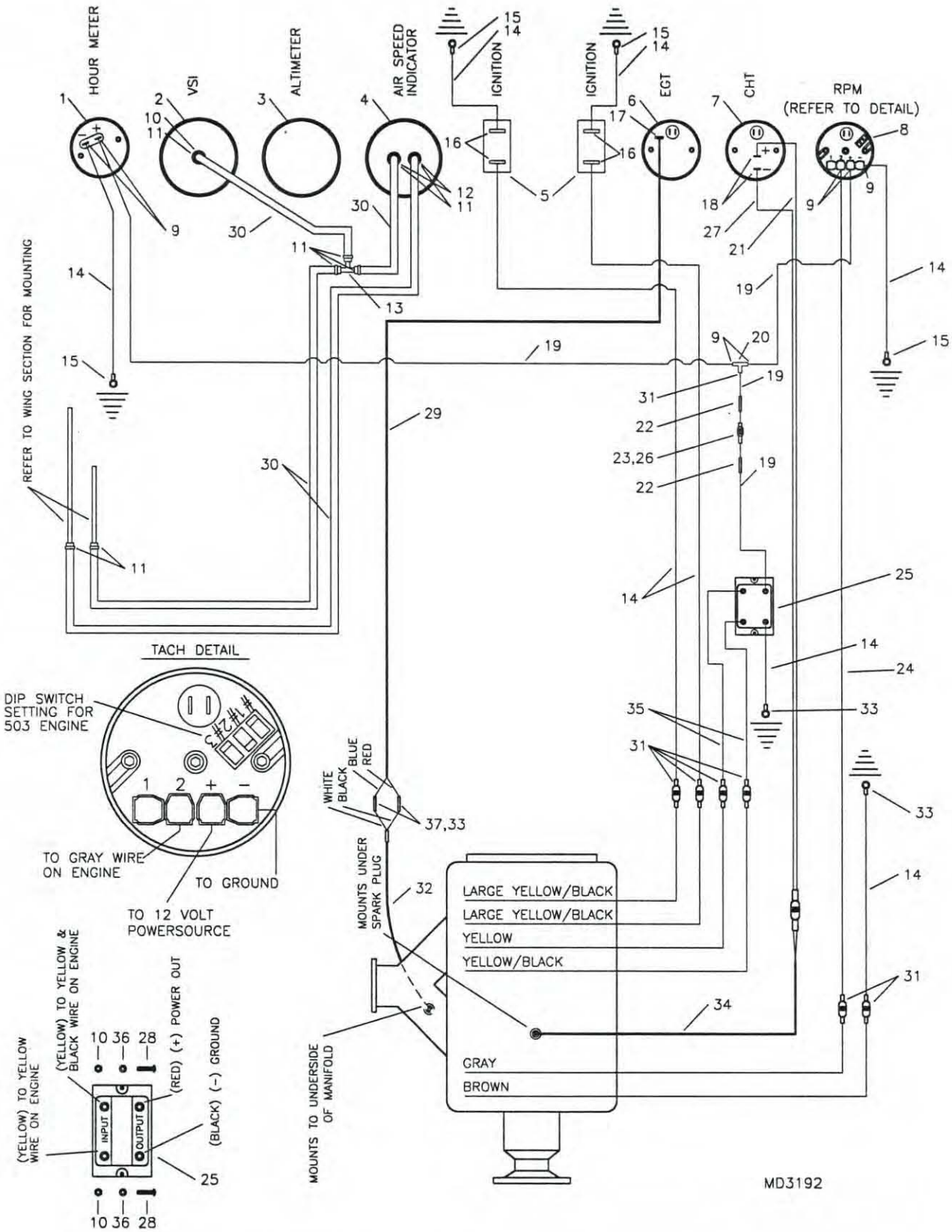

RANS S-6ES COYOTE II
503 INSTRUMENTS AND ELECTRICAL WITHOUT ELECTRIC START

S-6ES COYOTE II - 503 INSTRUMENTS & ELECTRICAL - WITHOUT ELECTRIC START

NOTE: Gauges may vary, consult directions provided with gauge for wiring diagram.

#	DESCRIPTION	PART NUMBER	QUANTITY
1.	Hour Meter	KSPW0022	1
2.	Vertical Speed Indicator (Feet per Minute) *	KSAV0008	1
2.	Vertical Speed Indicator (Meters per Second) *	KSAV0009	1
3.	Altimeter *	KSAV0001	1
3.	Altimeter with Window *	KSAV0002	1
3.	Altimeter with Millibar - Metric *	KSAV0003	1
4.	Air Speed Indicator, 0-150	KSAV0005	1
5.	Ignition Switch	MS35058-22	2
6.	Exhaust Gas Temperature Gauge *	KSPW0008	1
7.	Cylinder Head Temperature Gauge	KSPW0010	1
7.	Dual Cylinder Head Temperature Gauge *	KSPW0012	1
8.	RPM Gauge	KSPW0028	1
9.	14 Gauge Female Spade Terminal, Blue	IP-7128	7
10.	3/16" Shear Nut	AN364-1032A	2
11.	Line Clamp, 3/8"	FS-LCL 3/8	7
12.	Straight Withdrawal Fitting	8330	2
13.	Line Tee	8338	1
14.	14 Gauge Black Wire	14 GA WIRE/BLACK	20 ft
15.	14 Gauge Eye Terminal, Blue 3/16"	IP-7102	6
16.	14 Gauge Eye Terminal, Blue 5/32"	KSES0003	4
17.	EGT End Plug **	KSPW0008-1	0
18.	Female Terminal ***	KSPW0010-1	0
19.	14 Gauge Red Wire	14 GA WIRE/RED	14 ft
20.	Terminal Y Connector, Brass	IP-YC	1
21.	CHT Wire, Red ***	KSPW0010-2	0
22.	14 Gauge Splice, Butt Connector	IP-7132	2
23.	25 AMP Fuse	KSES0020-25	1
24.	14 Gauge White Wire	14 GA WIRE/WHITE	6 ft
25.	Regulator/Rectifier	KSES0005	1
26.	14 Gauge, In Line Fuse Holder	KSES0019	1
27.	CHT Wire, Black ***	KSPW0010-4	0
28.	Pan Head Phillips Bolt (10-32)	KSHW0006	2
29.	EGT Wires **	KSPW0008-2	0
30.	1/4" Fuel/Pitot/Static Line, Blue	FS-FL	25 ft
31.	14 Gauge Male Spade Terminal, Blue	IP-7126	7
32.	EGT Probe **	KSPW0008-3	0
33.	Shrink Wrap	KSAC0009	1 ft
34.	CHT Probe ***	KSPW0010-3	0
35.	14 Gauge Yellow Wire	14 GA WIRE/YELLOW	6 ft
36.	3/16" Large Washer	AN970-3	2
37.	Female Bullet Terminal	02-09-1103	4

*Optional gauge. **Supplied with EGT. ***Supplied with CHT.

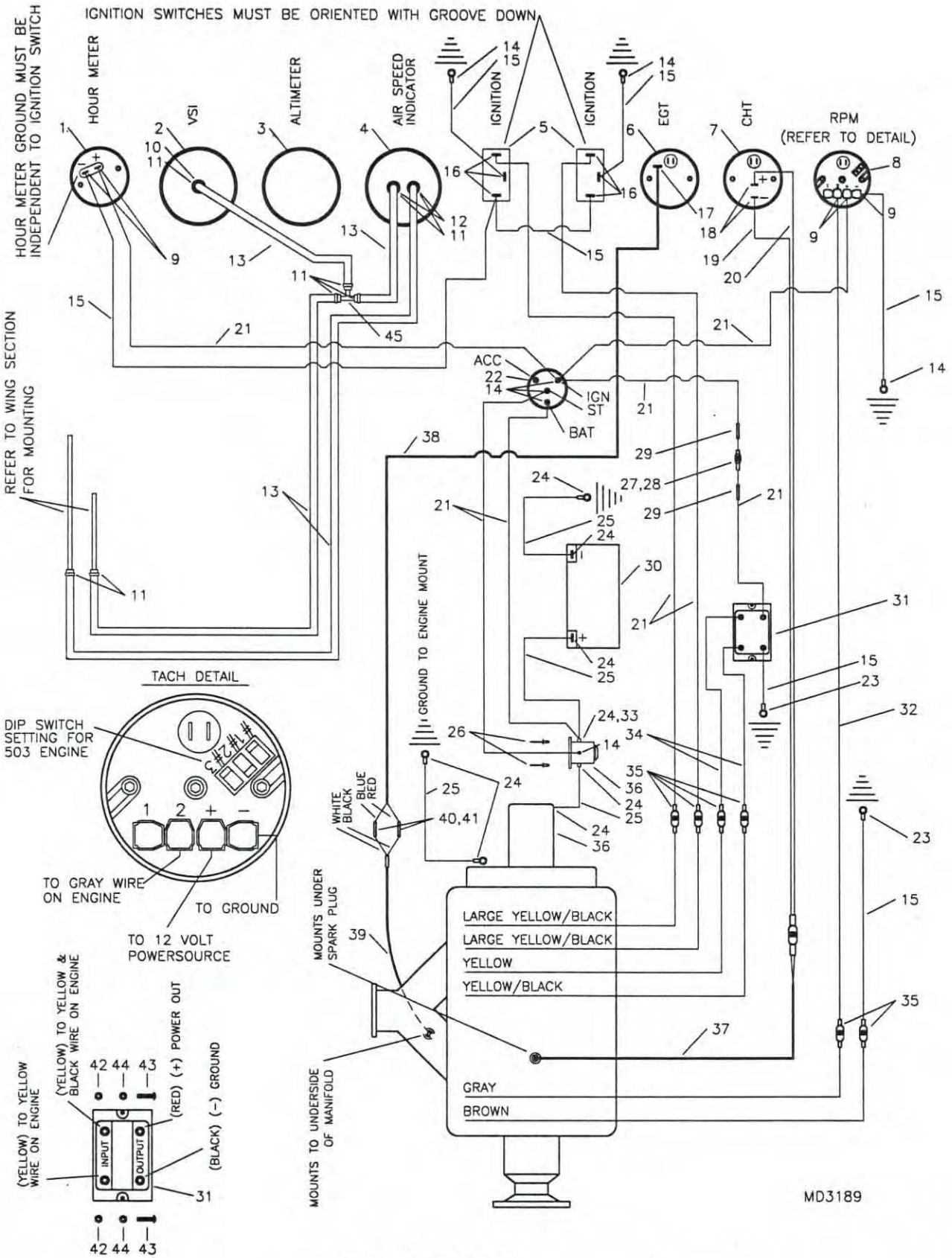

RANS

S-6ES COYOTE II
503 INSTRUMENTS AND ELECTRICAL WITH OPTIONAL ELECTRIC START

S-6ES COYOTE II - 503 INSTRUMENTS & ELECTRICAL - WITH OPTIONAL ELECTRIC START

NOTE: Gauges may vary, consult directions provided with gauge for wiring diagram.

#	DESCRIPTION	PART NUMBER	QUANTITY
1.	Hour Meter	KSPW0022	1
2.	Vertical Speed Indicator (Feet per Minute) *	KSAV0008	1
2.	Vertical Speed Indicator (Meters per Second) *	KSAV0009	1
3.	Altimeter *	KSAV0001	1
3.	Altimeter with Window *	KSAV0002	1
3.	Altimeter with Millibar - Metric *	KSAV0003	1
4.	Air Speed Indicator, 0-150	KSAV0005	1
5.	Ignition Switch	MS35058-23	2
6.	Exhaust Gas Temperature Gauge *	KSPW0008	1
7.	Cylinder Head Temperature Gauge	KSPW0010	1
7.	Dual Cylinder Head Temperature Gauge *	KSPW0012	1
8.	RPM Gauge	KSPW0028	1
9.	14 Gauge Female Spade Terminal, Blue	IP-7128	5
10.	90 Withdrawal Fitting	8342	1
11.	Line Clamp, 3/8"	FS-LCL 3/8	8
12.	Straight Withdrawal Fitting	8330	2
13.	1/4" Fuel/Pitot/Static Line, Blue	FS-FL	25 ft
14.	14 Gauge Eye Terminal, Blue 3/16"	IP-7102	7
15.	14 Gauge Black Wire	14 GA WIRE/BLACK	20 ft
16.	14 Gauge Eye Terminal, Blue 5/32"	KSES0003	6
17.	EGT End Plug **	KSPW0008-1	0
18.	Female Terminal ***	KSPW0010-1	0
19.	CHT Wire, Black ***	KSPW0010-4	0
20.	CHT Wire, Red ***	KSPW0010-2	0
21.	14 Gauge Red Wire	14 GA WIRE/RED	18 ft
22.	Key Start Switch	25-6	1
23.	14 Gauge Eye Terminal, Blue 1/4"	1/4 EYE 14 GA	2
24.	4 Gauge Eye Cable Terminal	4 GA CABLE LUG	8
25.	4 Gauge Battery Cable, Black Wire	4 GA WIRE/BLACK	20 ft
26.	3/16" Aluminum Pop Rivet - Cherry Q	AAPQ-64	2
27.	14 Gauge, In Line Fuse Holder	KSES0019	1
28.	25 AMP Fuse	KSES0020-25	1
29.	14 Gauge Splice, Butt Connector	IP-7132	2
30.	Battery ****	PS12150-NB	0
31.	Regulator/Rectifier	KSES0005	1
32.	14 Gauge White Wire	14 GA WIRE/WHITE	7 ft
33.	14 Gauge Eye Terminal, Blue 5/16"	5/16 I TERM	1
34.	14 Gauge Yellow Wire	14 GA WIRE/YELLOW	6 ft
35.	14 Gauge Male Spade Terminal, Blue	IP-7126	6
36.	Electric Starter Kit (503)	MESK-1-503	1
37.	CHT Probe ***	KSPW0010-3	0
38.	EGT Wires **	KSPW0008-2	0
39.	EGT Probe **	KSPW0008-3	0
40.	Female Bullet Terminal	02-09-1103	4

*Optional gauge. **Supplied with EGT. ***Supplied with CHT.
****Referenced from battery box installation.

S-6ES COYOTE II - 503 INSTRUMENTS & ELECTRICAL (CONTINUED)
(WITH OPTIONAL ELECTRIC START)

#	DESCRIPTION	PART NUMBER	QUANTITY
41 .	Shrink Wrap	KSAC0009	1 ft
42 .	3/16" Shear Nut	AN364-1032A	2
43 .	Pan Head Phillips Bolt (10-32)	KSHW0006	2
44 .	3/16" Large Wood Washer	AN970-3	2
45 .	Line Tee	8338	1

*Optional gauge. **Supplied with EGT. ***Supplied with CHT.
****Referenced from battery box installation.

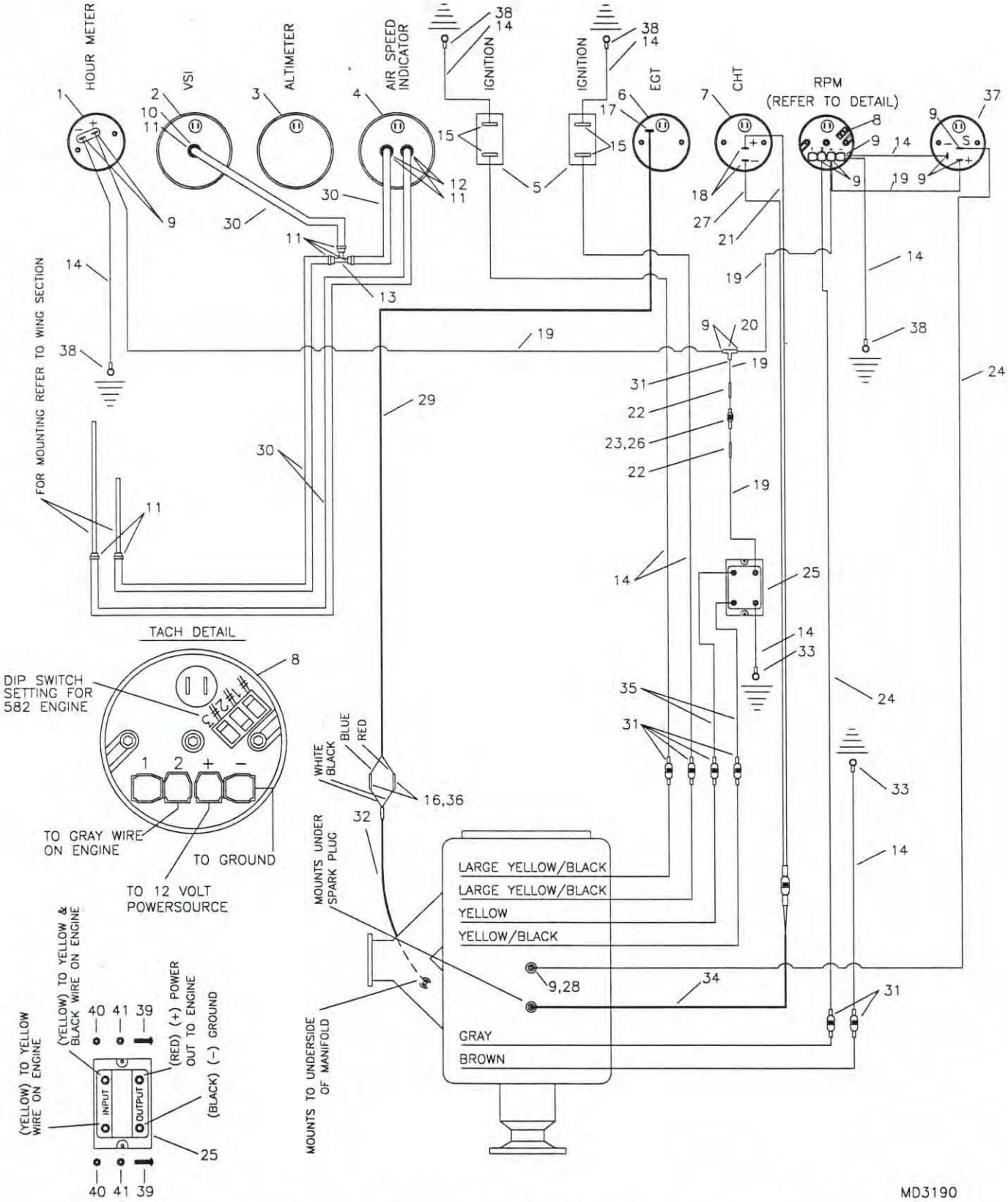

RANS S-6ES COYOTE II
582 INSTRUMENTS AND ELECTRICAL WITHOUT ELECTRIC START

S-6ES COYOTE II - 582 INSTRUMENTS & ELECTRICAL - WITHOUT ELECTRIC START

NOTE: Gauges may vary, consult directions provided with gauge for wiring diagram.

#	DESCRIPTION	PART NUMBER	QUANTITY
1.	Hour Meter	KSPW0022	1
2.	Vertical Speed Indicator (Feet per Minute) *	KSAV0008	1
2.	Vertical Speed Indicator (Meters per Second) *	KSAV0009	1
3.	Altimeter *	KSAV0001	1
3.	Altimeter with Window *	KSAV0002	1
3.	Altimeter with Millibar - Metric *	KSAV0003	1
4.	Air Speed Indicator, 0-150	KSAV0005	1
5.	Ignition Switch	MS35058-22	2
6.	Exhaust Gas Temperature Gauge	KSPW0008	1
7.	Dual Cylinder Head Temperature Gauge *	KSPW0012	1
7.	Cylinder Head Temperature Gauge *	KSPW0010	1
8.	RPM Gauge	KSPW0028	1
9.	14 Gauge Female Spade Terminal, Blue	IP-7128	11
10.	90 Withdrawal Fitting	8342	1
11.	Line Clamp, 3/8"	FS-LCL 3/8	8
12.	Straight Withdrawal Fitting	8330	2
13.	Line Tee	8338	1
14.	14 Gauge Black Wire	14 GA WIRE/BLACK	20 ft
15.	14 Gauge Eye Terminal, Blue 5/32"	KSES0003	4
16.	Female Bullet Terminal	02-09-1103	4
17.	EGT End Plug **	KSPW0008-1	0
18.	Female Terminal ***	KSPW0010-1	0
19.	14 Gauge Red Wire	14 GA WIRE/RED	18 ft
20.	Terminal Y Connector, Brass	IP-YC	1
21.	CHT Wire, Red ***	KSPW0010-2	0
22.	14 Gauge Splice, Butt Connector	IP-7132	2
23.	25 AMP Fuse	KSES0020-25	1
24.	14 Gauge White Wire	14 GA WIRE/WHITE	12 ft
25.	Regulator/Rectifier	KSES0005	1
26.	14 Gauge, In Line Fuse Holder	KSES0019	1
27.	CHT Wire, Black ***	KSPW0010-4	0
28.	Coolant Temperature Probe *****	KSPW0016-1	0
29.	EGT Wires **	KSPW0008-2	0
30.	1/4" Fuel/Pitot/Static Line, Blue	FS-FL	25 ft
31.	14 Gauge Male Spade Terminal, Blue	IP-7126	7
32.	EGT Probe **	KSPW0008-3	0
33.	14 Gauge Eye Terminal, Blue 1/4"	1/4 EYE 14 GA	2
34.	CHT Probe ***	KSPW0010-3	0
35.	14 Gauge Yellow Wire	14 GA WIRE/YELLOW	6 ft
36.	Shrink Wrap	KSAC0009	1 ft
37.	Coolant Temperature Gauge	KSPW0016	1
38.	14 Gauge Eye Terminal, Blue 3/16"	IP-7102	4
39.	Pan Head Phillips Bolt (10-32)	KSHW0006	2
40.	3/16" Shear Nut	AN364-1032A	2
41.	3/16" Large Washer	AN970-3	2

*Optional gauge. **Supplied with EGT. ***Supplied with CHT.
****Referenced from cooling system. *****Supplied with coolant temperature gauge.

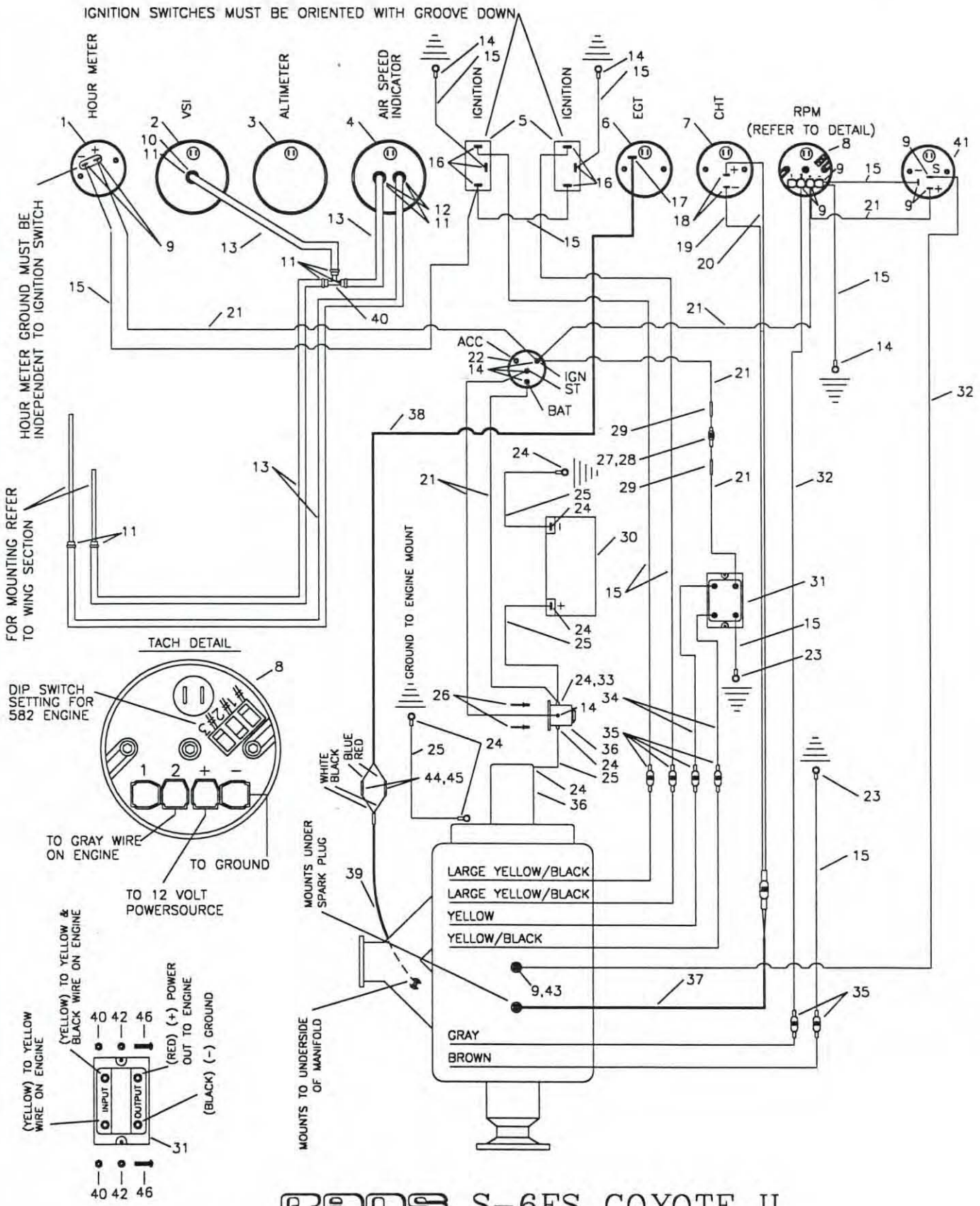

RANS S-6ES COYOTE II
582 INSTRUMENTS AND ELECTRICAL
WITH OPTIONAL ELECTRIC START

MD3191

S-6ES COYOTE II - 582 INSTRUMENTS & ELECTRICAL - WITH OPTIONAL ELECTRIC START

NOTE: Gauges may vary, consult directions provided with gauge for wiring diagram.

#	DESCRIPTION	PART NUMBER	QUANTITY
1.	Hour Meter	KSPW0022	1
2.	Vertical Speed Indicator (Feet per Minute) *	KSAV0008	1
2.	Vertical Speed Indicator (Meters per Second) *	KSAV0009	1
3.	Altimeter *	KSAV0001	1
3.	Altimeter with Window *	KSAV0002	1
3.	Altimeter with Millibar - Metric *	KSAV0003	1
4.	Air Speed Indicator, 0-150	KSAV0005	1
5.	Ignition Switch	MS35058-23	2
6.	Exhaust Gas Temperature Gauge	KSPW0008	1
7.	Cylinder Head Temperature Gauge *	KSPW0010	1
7.	Dual Cylinder Head Temperature Gauge *	KSPW0012	1
8.	RPM Gauge	KSPW0028	1
9.	14 Gauge Female Spade Terminal, Blue	IP-7128	9
10.	90 Withdrawal Fitting	8342	1
11.	Line Clamp, 3/8"	FS-LCL 3/8	8
12.	Straight Withdrawal Fitting	8330	2
13.	1/4" Fuel/Pitot/Static Line, Blue	FS-FL	25 ft
14.	14 Gauge Eye Terminal, Blue 3/16"	IP-7102	7
15.	14 Gauge Black Wire	14 GA WIRE/BLACK	20 ft
16.	14 Gauge Eye Terminal, Blue 5/32"	KSES0003	6
17.	EGT End Plug **	KSPW0008-1	0
18.	Female Terminal ***	KSPW0010-1	0
19.	CHT Wire, Black ***	KSPW0010-4	0
20.	CHT Wire, Red ***	KSPW0010-2	0
21.	14 Gauge Red Wire	14 GA WIRE/RED	18 ft
22.	Key Start Switch	25-6	1
23.	14 Gauge Eye Terminal, Blue 1/4"	1/4 EYE 14 GA	2
24.	4 Gauge Eye Cable Terminal	4 GA CABLE LUG	8
25.	4 Gauge Battery Cable, Black Wire	4 GA WIRE/BLACK	20 ft
26.	3/16" Aluminum Pop Rivet - Cherry Q	AAPQ-64	2
27.	14 Gauge, In Line Fuse Holder	KSES0019	1
28.	25 AMP Fuse	KSES0020-25	1
29.	14 Gauge Splice, Butt Connector	IP-7132	2
30.	Battery ****	PS12150-NB	0
31.	Regulator/Rectifier	KSES0005	1
32.	14 Gauge White Wire	14 GA WIRE/WHITE	13 ft
33.	14 Gauge Eye Terminal, Blue 5/16"	5/16 I TERM	1
34.	14 Gauge Yellow Wire	14 GA WIRE/YELLOW	6 ft
35.	14 Gauge Male Spade Terminal, Blue	IP-7126	6
36.	Elecrtic Starter Kit - 582	MESK-3-582	1
37.	CHT Probe ***	KSPW0010-3	0
38.	EGT Wires **	KSPW0008-2	0

*Optional gauge. **Supplied with EGT. ***Supplied with CHT.
****Referenced from battery box installation. *****Referenced from 582 cooling system.
******Supplied with coolant temperature gauge.

S-6ES COYOTE II - 582 INSTRUMENTS & ELECTRICAL (CONTINUED)

(WITH OPTIONAL ELECTRIC START)

#	DESCRIPTION	PART NUMBER	QUANTITY
39.	EGT Probe **	KSPW0008-3	0
40.	3/16" Shear Nut	AN364-1032A	2
41.	Coolant Temperature Gauge	KSPW0016	1
42.	3/16" Large Washer	AN970-3	2
43.	Coolant Temperature Probe *****	KSPW0016-1	0
44.	Female Bullet Terminal	02-09-1103	4
45.	Shrink Wrap	KSAC0009	1 ft
46.	Pan Head Phillips Bolt (10-32)	KSHW0006	2

*Optional gauge. **Supplied with EGT. ***Supplied with CHT.
****Referenced from battery box installation.
*****Supplied with coolant temperature gauge.

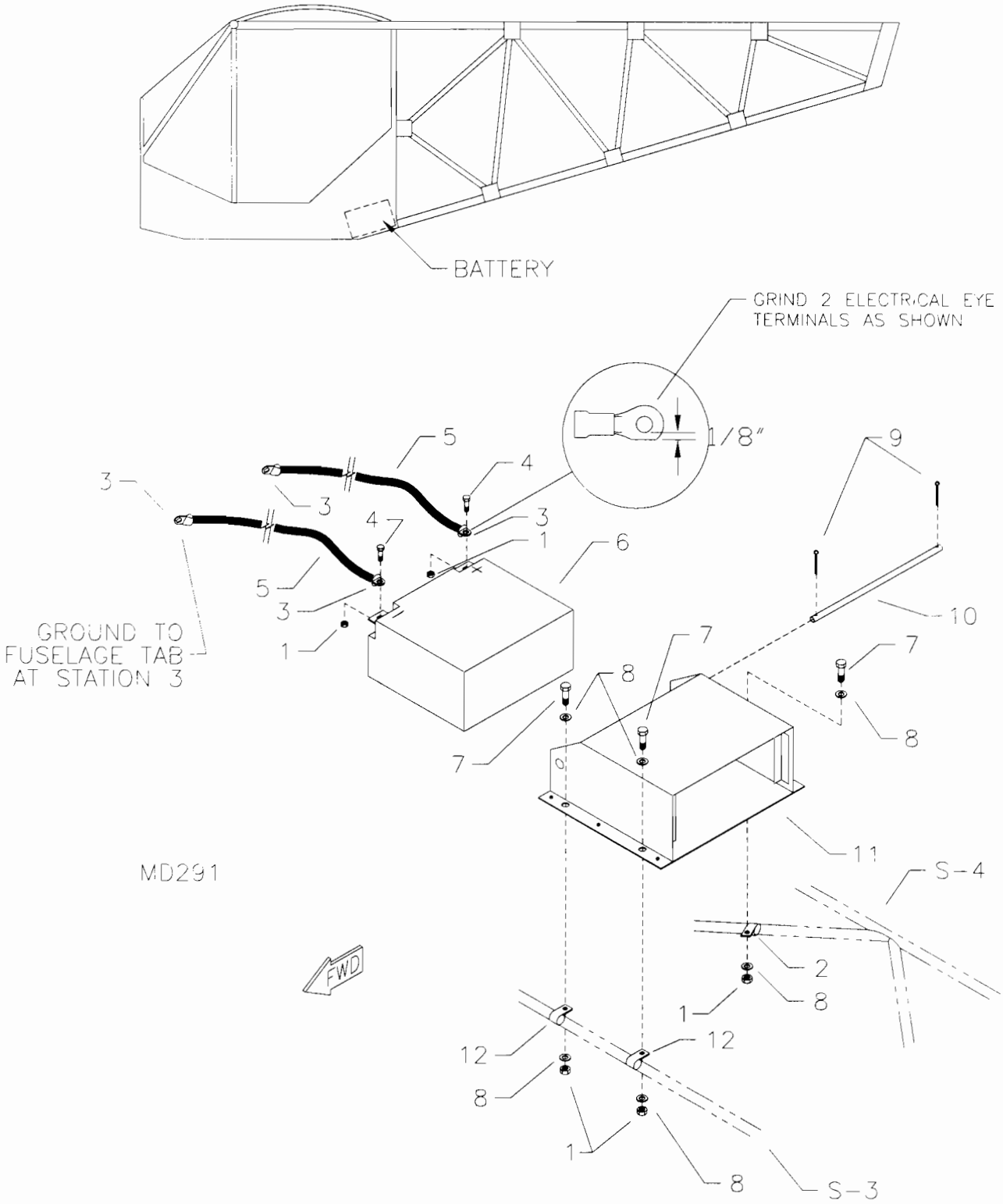

RANS S-6ES/S-6S COYOTE II
503/582 BATTERY BOX INSTALLATION

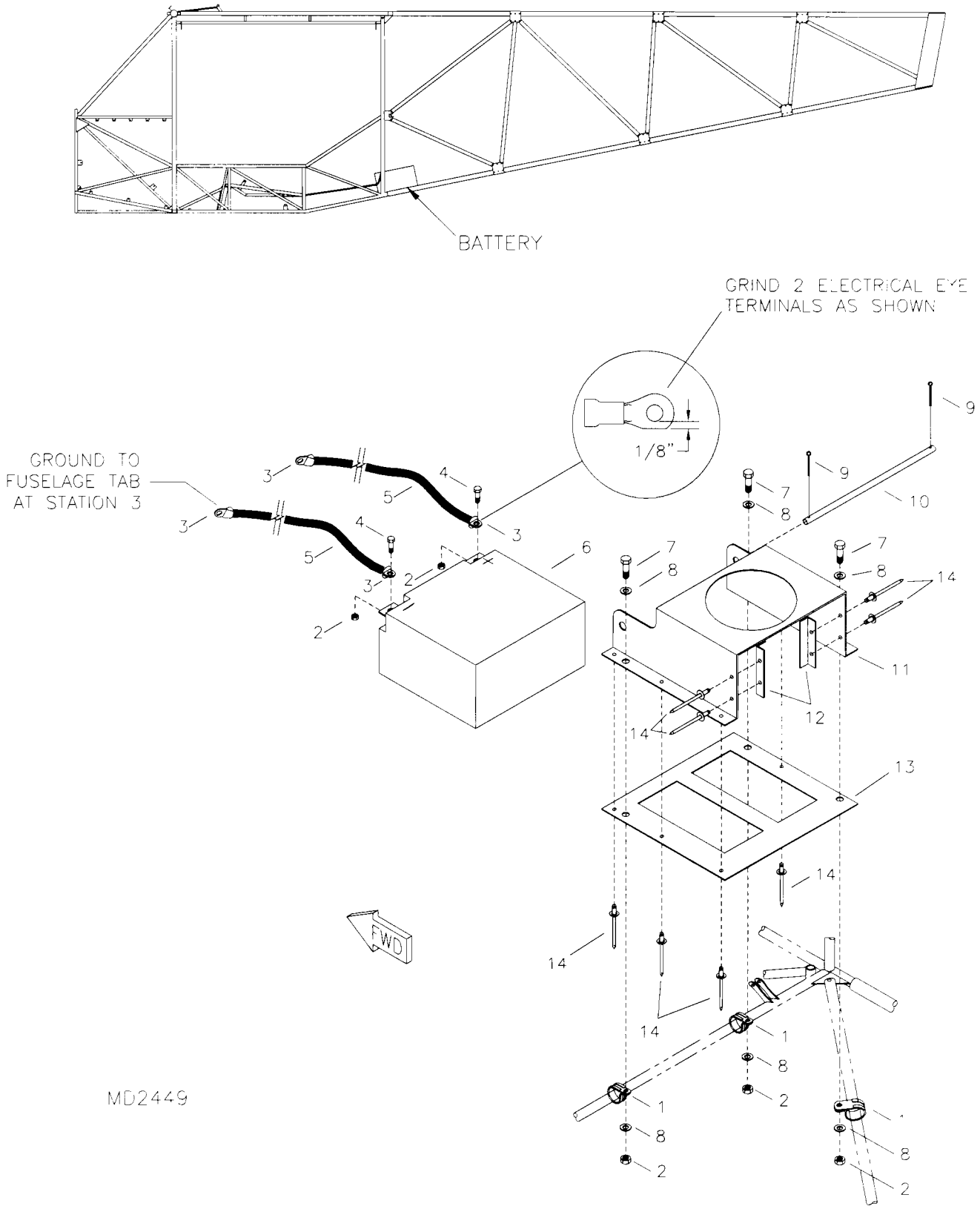

RANS S-6ES COYOTE II
912 BATTERY BOX INSTALLATION

S-6ES COYOTE II BATTERY BOX INSTALLATION

#	DESCRIPTION	PART NUMBER	QUANTITY
1.	3/16" Shear Nut	AN364-1032A	5
2.	1/2" Non Cushioned Clamp	AN742-D8	1
3.	4 Gauge Eye Terminal	(REF)	0
4.	3/16" Bolt	AN3-4A	2
5.	Battery Cable	(REF)	0
6.	Battery (582)	PS-12150-NB	1
6.	Battery (912)	PS-12260-NB	1
7.	3/16" Bolt	AN3-4A	3
8.	3/16" Thin Washer	AN960-10L	6
9.	Small Cotter Pin	MS24665-134	2
10.	Battery Bar	(582) BAT-BAR	1
10.	Battery Bar	(912) BAT-BAR	1
11.	Battery Box	(582) BAT-BOX	1
11.	Battery Box (912)	BAT-BOX-912	1
12.	3/4" Non-Cushioned Clamp	AN742-D12	2

S-6ES COYOTE II - 912 BATTERY BOX INSTALLATION
(ELECTRIC START)

#	DESCRIPTION	PART NUMBER	QUANTITY
1.	3/4" Cushioned Tube Clamp	MS21919-DG12	3
2.	3/16" Shear Nut	AN364-1032A	5
3.	4 Gauge Eye Terminal *	-----	0
4.	3/16" Bolt	AN3-4A	2
5.	Battery Cable *	-----	0
6.	Battery	PS12150-NB	1
7.	3/16" Bolt	AN3-4A	3
8.	3/16" Thin Washer	AN960-10L	6
9.	Small Cotter Pin	MS24665-134	2
10.	Battery Bar	BAT-BAR-503/582	1
11.	Battery Box Side Plate	BAT-BOX-1	1
12.	Battery Box Support Angle	BAT-BOX-3	2
13.	Battery Box Mount Plate	BAT-BOX-2	1
14.	1/8" Aluminum Pop Rivet - Cherry Q	AAPQ-42	11

NOTE: This location is used with wing tanks only.
If installing a fuselage fuel tank use standard location.
*Reference.

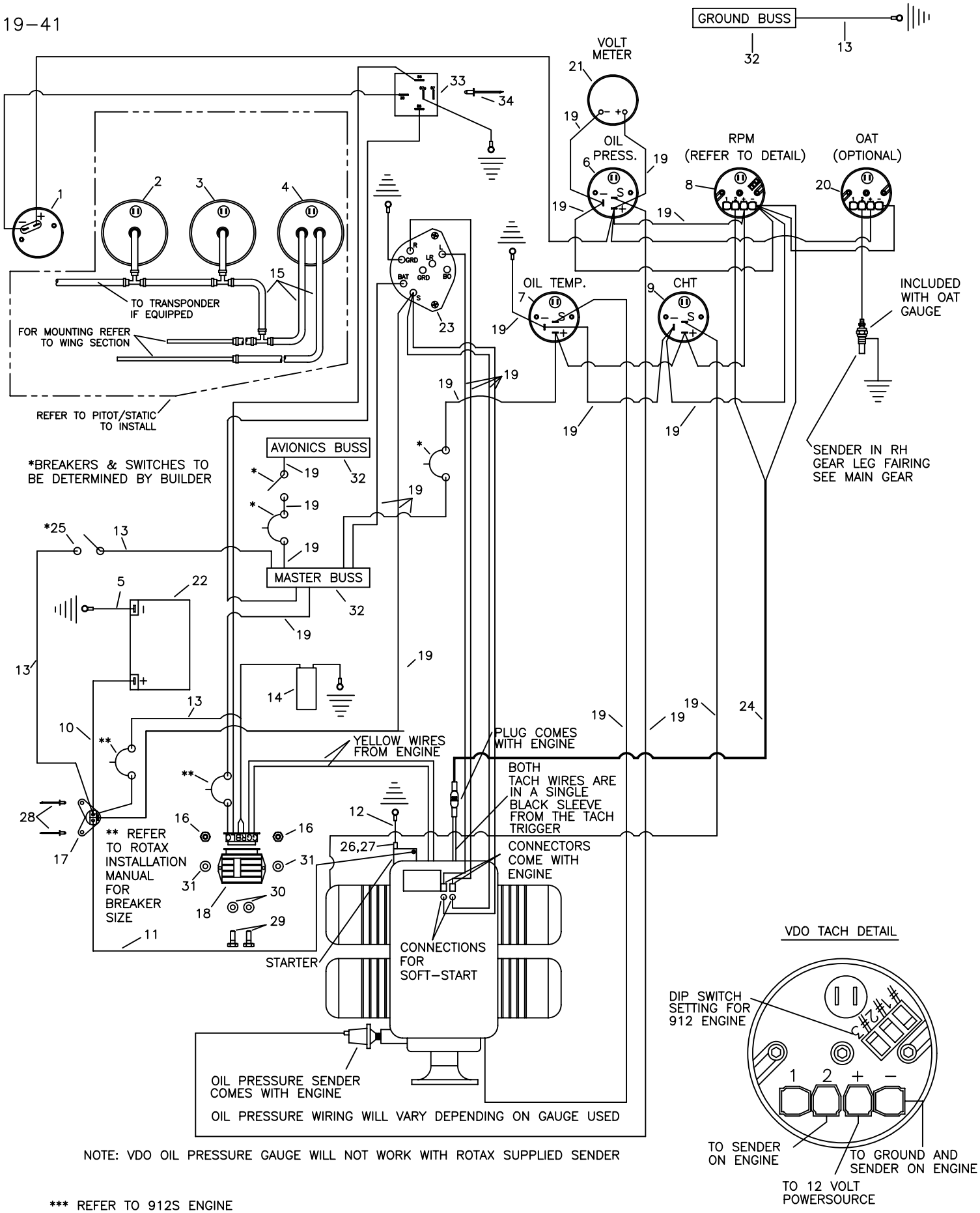

NOTE: VDO OIL PRESSURE GAUGE WILL NOT WORK WITH ROTAX SUPPLIED SENDER

*** REFER TO 912S ENGINE

RANS S-6S COYOTE II
INSTRUMENTS AND ELECTRICAL

S-6ES COYOTE II - SPORT WING - 912/912S INSTRUMENTS AND ELECTRICAL

NOTE: Gauges may vary, consult directions provided with gauge for wiring diagram.

#	DESCRIPTION	PART NUMBER	QUANTITY
1 .	Hour Meter	KSPW0022	1
2 .	Vertical Speed Indicator (Feet per Minute) *	KSAV0008	1
2 .	Vertical Speed Indicat (Meters per Second) *	KSAV0009	1
3 .	Altimeter *	KSAV0001	1
3 .	Altimeter with Window *	KSAV0002	1
3 .	Altimeter with Millibar - Metric *	KSAV0003	1
4 .	Air Speed Indicator	KSAV0019	1
5 .	Ignition Switch	MS35058-22	2
6 .	Oil Pressure Gauge (Electric)	KSPW0019	1
7 .	Oil Temperature Gauge (Electric) **	KSPW0017	1
8 .	RPM Gauge	KSPW0028	1
9 .	Cylinder Head Temperature Gauge (Electric) **	KSPW0017	1
10 .	25 AMP Fuse	KSES0020-25	1
11 .	14 Gauge, In Line Fuse Holder	KSES0019	2
12 .	14 Gauge Female Spade Terminal, Blue	IP-7128	20
13 .	90 Withdrawal Fitting	8342	1
14 .	Line Clamp, 3/8"	FS-LCL 3/8	8
15 .	Straight Withdrawal Fitting	8330	2
16 .	Line Tee	8338	1
17 .	1/4" Fuel/Pitot/Static Line, Blue	FS-FL	25 ft
18 .	14 Gauge Eye Terminal, Blue, 3/16"	IP-7102	8
19 .	14 Gauge Black Wire	14 GA WIRE/BLACK	26 ft
20 .	14 Gauge Eye Terminal, Blue 5/32"	KSES0003	4
21 .	14 Gauge Red Wire	14 GA WIRE/RED	40 ft
22 .	Terminal Y Connector, Brass	IP-YC	1
23 .	Key Start Switch	25-6	1
24 .	14 Gauge Yellow Wire	14 GA WIRE/YELLOW	20 ft
25 .	14 Gauge White Wire	14 GA WIRE/WHITE	20 ft
26 .	2 Plex 20 Gauge Wire	62181-DELL	10 ft
27 .	14 Gauge Splice, Butt Connector	IP-7132	4
28 .	3/16" Aluminum Pop Rivet - Cherry Q	AAPQ-64	2
29 .	550B Spade Terminal	550B SPADE TERM	4
30 .	14 Gauge Green Wire	14 GA WIRE/GREEN	15 ft
31 .	Battery ***	PS12150-NB	0
32 .	4 Gauge Eye Cable Terminal	4 GA CABLE LUG	8
33 .	4 Gauge Battery Cable, Black Wire	4 GA WIRE/BLACK	20 ft
34 .	14 Gauge Eye Terminal, Blue 1/4"	1/4 EYE 14 GA	3
35 .	Solenoid ****	-----	0
36 .	30 AMP Fuse	KSES0020-30	1
37 .	Regulator/Rectifier ****	-----	0
38 .	3/16" Bolt	AN3-5A	2
39 .	3/16" Thin Washer	AN960-10L	2
40 .	Teflon Tape *****	TEFLON TAPE	0

*Optional gauge. **Oil Temperature & CHT use the same type of gauge.
***Referenced from 912 battery box installation. ****Supplied with Engine.
*****Builder Provides. *******Supplied with coolant temperature gauge.

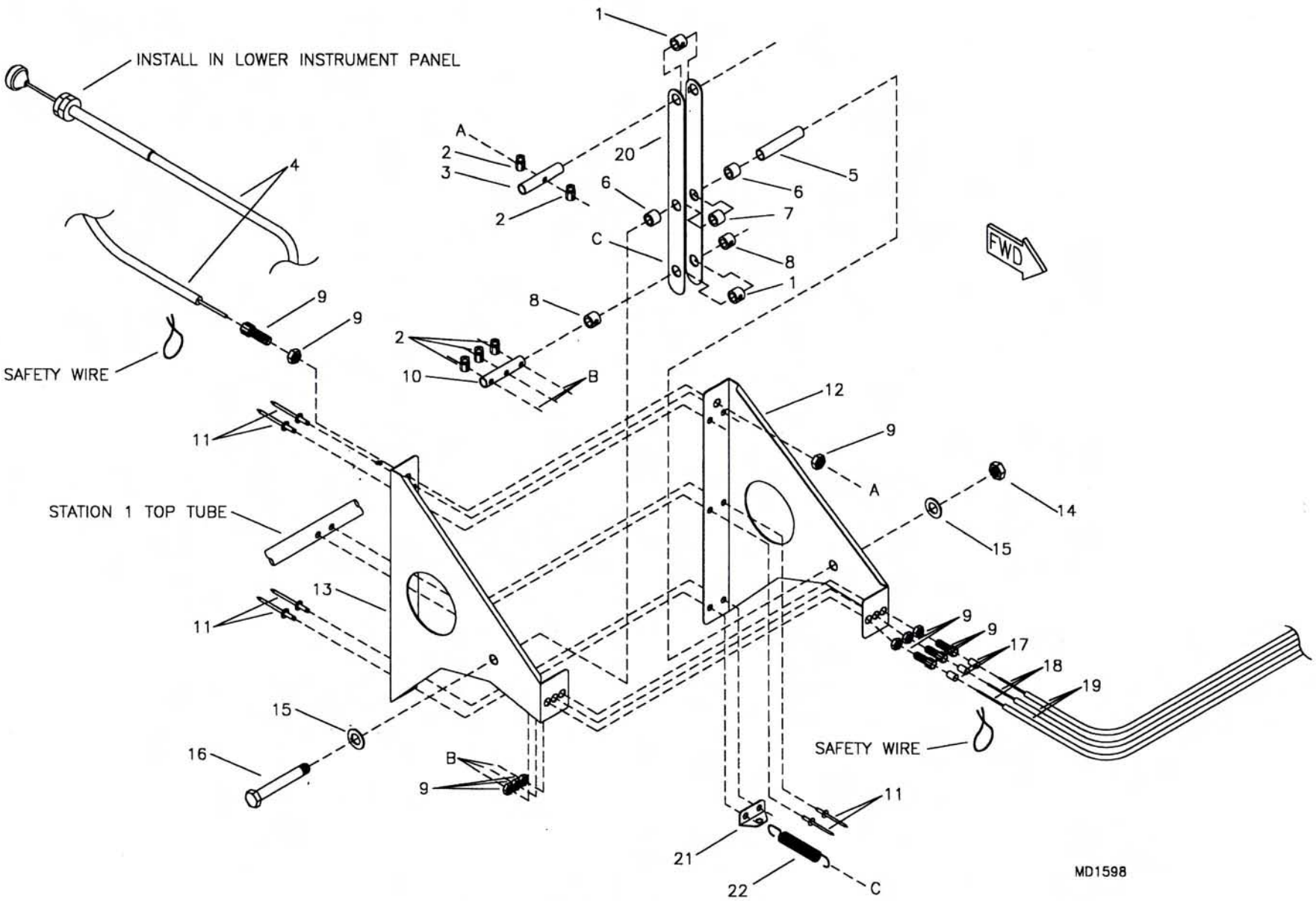

RANS S-6ES COYOTE II
503/582 THROTTLE & MOTION CONVERTER

S-6ES COYOTE II - 503/582 THROTTLE & MOTION CONVERTER

#	DESCRIPTION	PART NUMBER	QUANTITY
1.	Spacer Bushing, 3/8" x .058 x 1/2" *	SB-3/8X1/2X058	2
2.	Wire Stop/Screw, 503SC	2360	3
2.	Wire Stop/Screw, 503DC	2360	4
2.	Wire Stop/Screw, 582	2360	5
3.	Spacer Bushing, 1/4" x .028 x 7/8" *	SB-1/4X7/8	1
4.	Throttle	05-08036	1
5.	Spacer Bushing, 1/4" x .028 x 1 5/16" *	SB-1/4X1 5/16	1
6.	Spacer Bushing, 3/8" x .058 x 3/8" *	SB-3/8X3/8	2
7.	Spacer Bushing, 3/8" x .058 x 1/2" *	SB-3/8X1/2X058	1
8.	Spacer Bushing, 3/8" x .058 x 3/8" *	SB-3/8X3/8	2
9.	Adjustable Cable Ferrule, 503SC	12553	2
9.	Adjustable Cable Ferrule, 503DC	12553	3
9.	Adjustable Cable Ferrule, 582	12553	4
10.	Spacer Bushing, 3/8" x .058 x 1 1/4" *	SB-3/8X1 1/4	1
11.	1/8" Aluminum Pop Rivet - Cherry Q	AAPQ-44	6
12.	Throttle Motion Converter Side Plate, LH	KPPW0031	1
13.	Throttle Motion Converter Side Plate, RH	KPPW0030	1
14.	3/16" Shear Nut	AN364-1032A	1
15.	3/16" Thin Washer	AN960-10L	2
16.	3/16" Bolt	AN3-16A	1
17.	Cable Ferrule Cap, 503SC	ENDCAP-12000	1
17.	Cable Ferrule Cap, 503DC	ENDCAP-12000	2
17.	Cable Ferrule Cap, 582	ENDCAP-12000	3
18.	Throttle Cable, 105", 503SC	EG-T-CAB	1
18.	Throttle Cable, 105", 503DC	EG-T-CAB	2
18.	Throttle Cable, 105", 582	EG-T-CAB	3
19.	Throttle Cable Housing, 36", 503SC	EG-T-CAB-H	1
19.	Throttle Cable Housing, 36", 503DC	EG-T-CAB-H	2
19.	Throttle Cable Housing, 36", 582	EG-T-CAB-H	3
20.	Throttle Motion Converter Arm	KPPW0032	1
21.	Attach Angle	KPAC0025	1
22.	Power Spring	S1016	1

*Builder must fabricate from raw stock, see detail drawing.

0017A-1

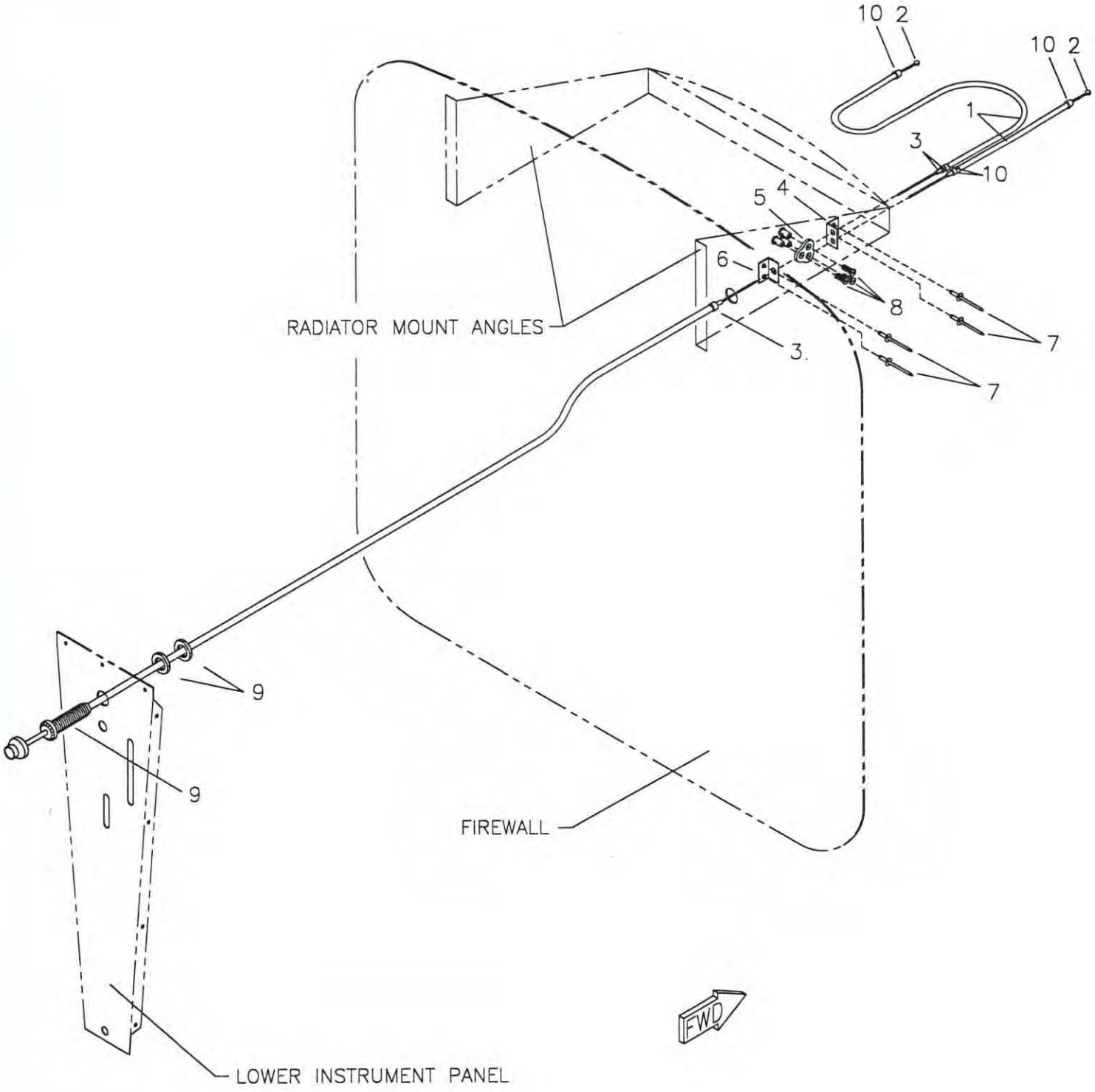

MD780

RANS S-6ES COYOTE II
912/912S THROTTLE ASSEMBLY

06/02/03

S-6ES COYOTE II - 912/912S THROTTLE ASSEMBLY

#	DESCRIPTION	PART NUMBER	QUANTITY
1.	Throttle Cable Housing	EG-T-CAB-H	8 ft
2.	Throttle Cable	EG-T-CAB	2
3.	Cable Conduit Ferrule	2394	3
4.	Dual Cable Retainer	CK-DCS	1
5.	Mixer Plate	KPPW0076	1
6.	Single Cable Retainer	CK-CS	1
7.	1/8" Stainless Steel Pop Rivet - Cherry Q	CCPQ-45	4
8.	Wire Stop/Screw	2361	3
9.	Throttle	05-08036	1
10.	Cable Ferrule Cap, 582	ENDCAP-12000	4

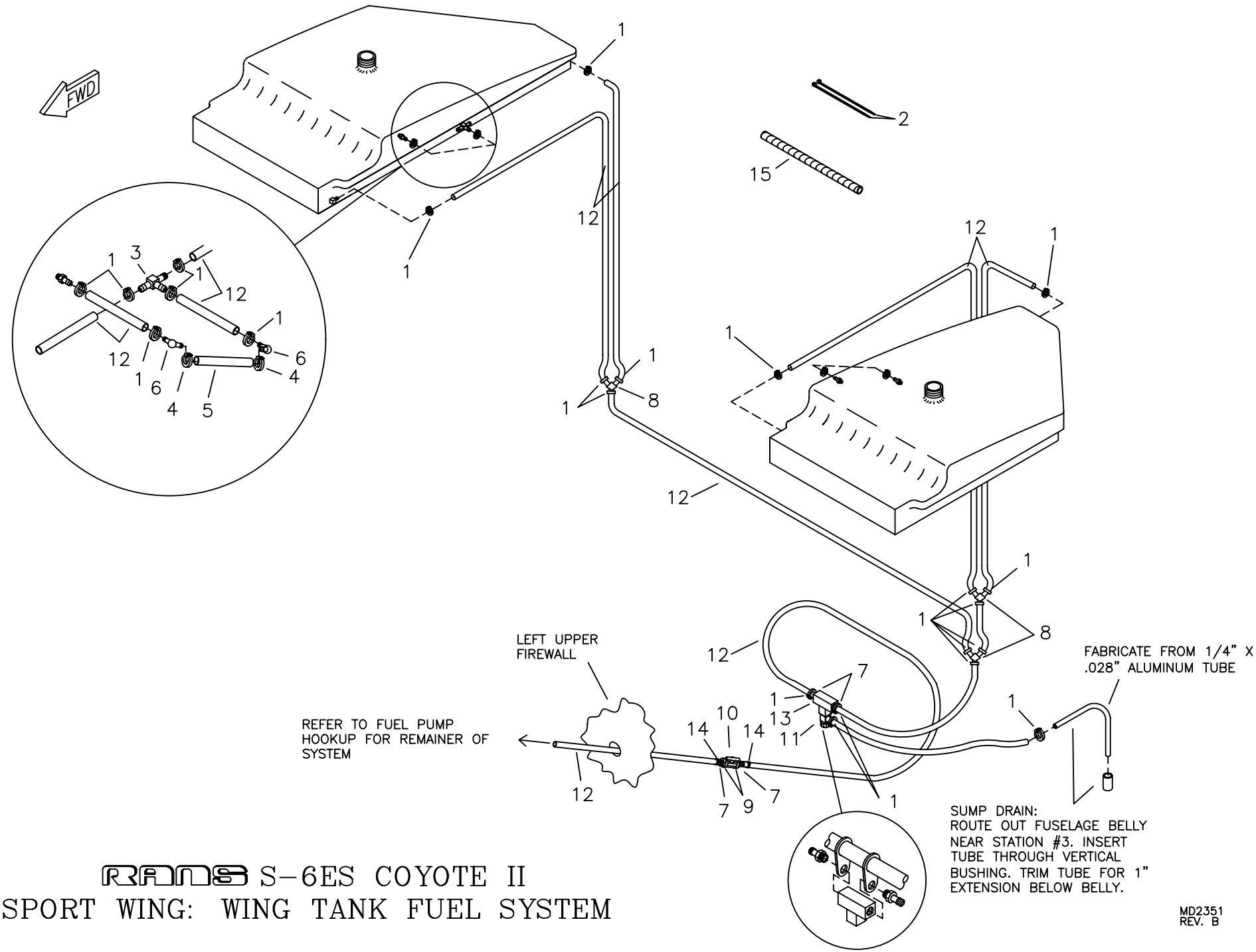

RANS S-6ES COYOTE II
SPORT WING: WING TANK FUEL SYSTEM

S-6ES COYOTE II - FUEL SYSTEM

#	DESCRIPTION	PART NUMBER	QUANTITY
1 .	Line Clamp, 1/2" I.D.	FS-LCL 1/2	29
2 .	Long Nylon Ties	LG-N-TIE	2
3 .	1/4" Tee	8338	2
4 .	Line Clamp, 5/16" I.D.	FS-LCL 5/16ID	4
5 .	1/4" Clear Fuel Line	KSFS0008	3 ft
6 .	1/4" x 1/4" 90 Fitting	7-11044	4
7 .	Straight Withdrawal Fitting	8330	4
8 .	Fuel Line "Y" Connector	8345	3
9 .	Hose Clamp, 1 1/2"	5-5216	2
10 .	Fuel Shut Off Valve	FS-S-OFF	1
11 .	Sump Drain Valve	8336	1
12 .	1/4" Black Fuel Line ***	KSFS0002	50 ft
13 .	1/8" Brass Tee Fitting	3-20120	1
14 .	Small Hose Clamp	5-6202	2
15 .	Coil Wrap	1/2 SPIRAL LOOM	2 ft

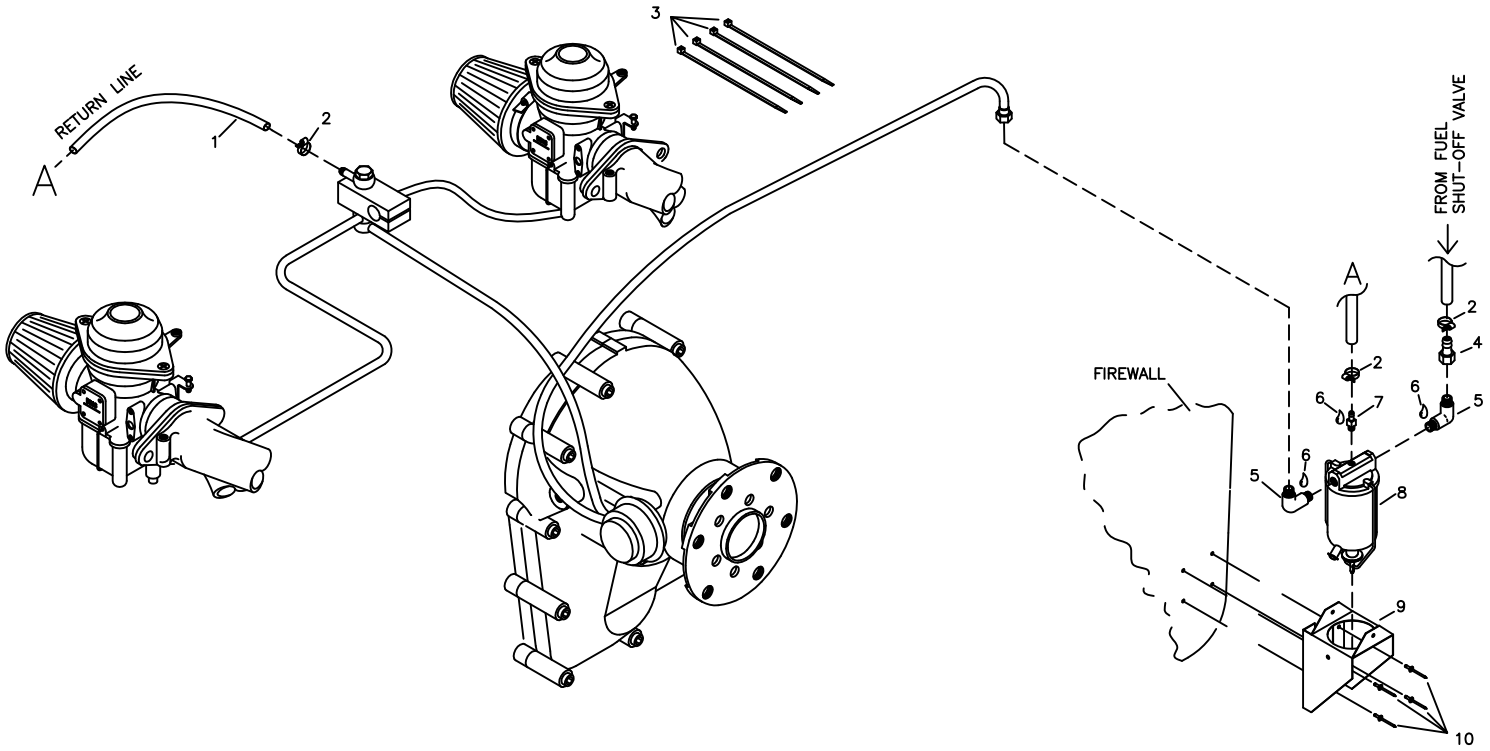

RANS S-6 COYOTE II
ROTAX 912
OPTIONAL GASCOLATOR INSTALLATION

MD1249

S-6ES COYOTE II - GASCOLATOR

#	DESCRIPTION	PART NUMBER	QUANTITY
1 .	1/4" Black Fuel Line	KSFS0002	3 ft
2 .	Small Hose Clamp	5-6202	3
3 .	Short Black Nylon Ties	N-TIES	4
4 .	Hose Fitting (1/4" Hose Fitting to - 6 Flare)	30682-6-4B	1
5 .	90 Degree Fitting	AN822-6D	2
6 .	Thread Sealant *	-----	0
7 .	Straight Withdrawal Fitting	8330	1
8 .	Gascolator	KSPW0067	1
9 .	Gascolator Bracket	KSPW0066	1
10 .	1/8" Stainless Steel Rivet - Cherry Q	CCPQ-41	4

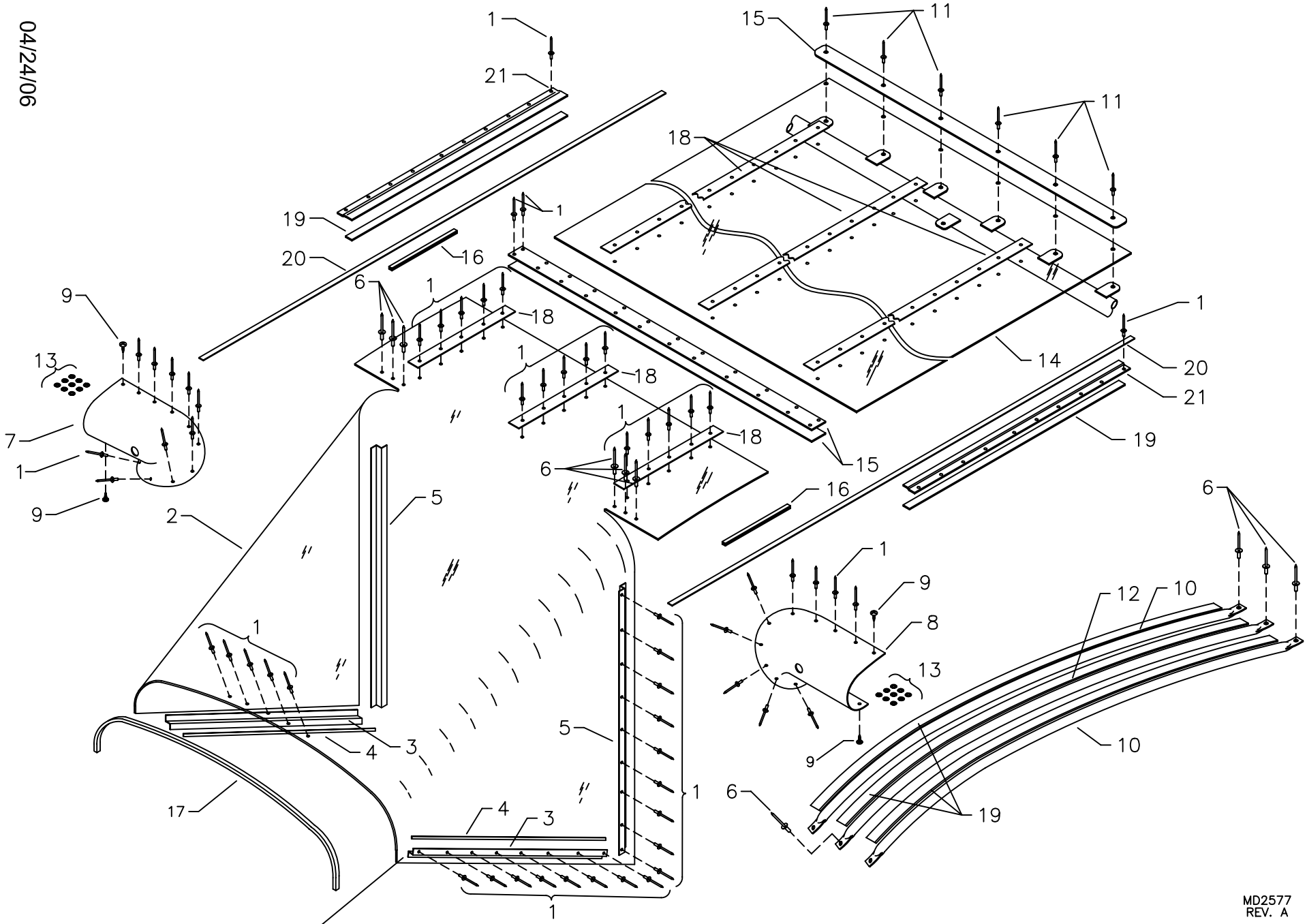

RANS S-6ES COYOTE II
SPORT WING: WINDSHIELD ASSEMBLY

S-6ES COYOTE II - SPORT WING: WINDSHIELD ASSEMBLY

#	DESCRIPTION	PART NUMBER	QUANTITY
1.	1/8" Aluminum Pop Rivet - Cherry Q	AAPQ-42	155
2.	Lexan Windshield (Clear)	KPWS0031	1
3.	"Z" Strip	WS-ZS	2
4.	Foam Rubber Strip, 3/8" x 3/16" x 1'	WS-FS	0 rls
5.	"Z" Strip Vertical	WS-ZSV	2
6.	3/16" Aluminum Pop Rivet - Cherry Q	AAPQ-64	10
7.	RH Wing Cuff	WS-CUFF-RH-ES	1
8.	LH Wing Cuff	WS-CUFF-LH-ES	1
9.	#8 Pan Head Screw	8X1/2 PHS	4
10.	Outer Rib	KPWI0496	2
11.	1/8" Aluminum Pop Rivet - Cherry Q	AAPQ-44	6
12.	Middle Rib	KPWI0495	1
13.	1/8" Small Brass Washer	AN960-B4	18
14.	Skylight	KPWS0032	1
15.	Mating Strip	WS-WSSLS	3
16.	Rubber Trim	X1011	30 in
17.	Foam Rubber Strip, 3/8" x 3/16" x 6'	WS-FS	1 rls
18.	Skylight Trim Strip	KPWS0010	3
19.	1/2" Black Foam Tape	KSAC0021	15 ft
20.	Foam Strip, 3/8" x 1/2"	3/8-FS	96 in
21.	Skylight Hold Down Strip	KPWS0033	2

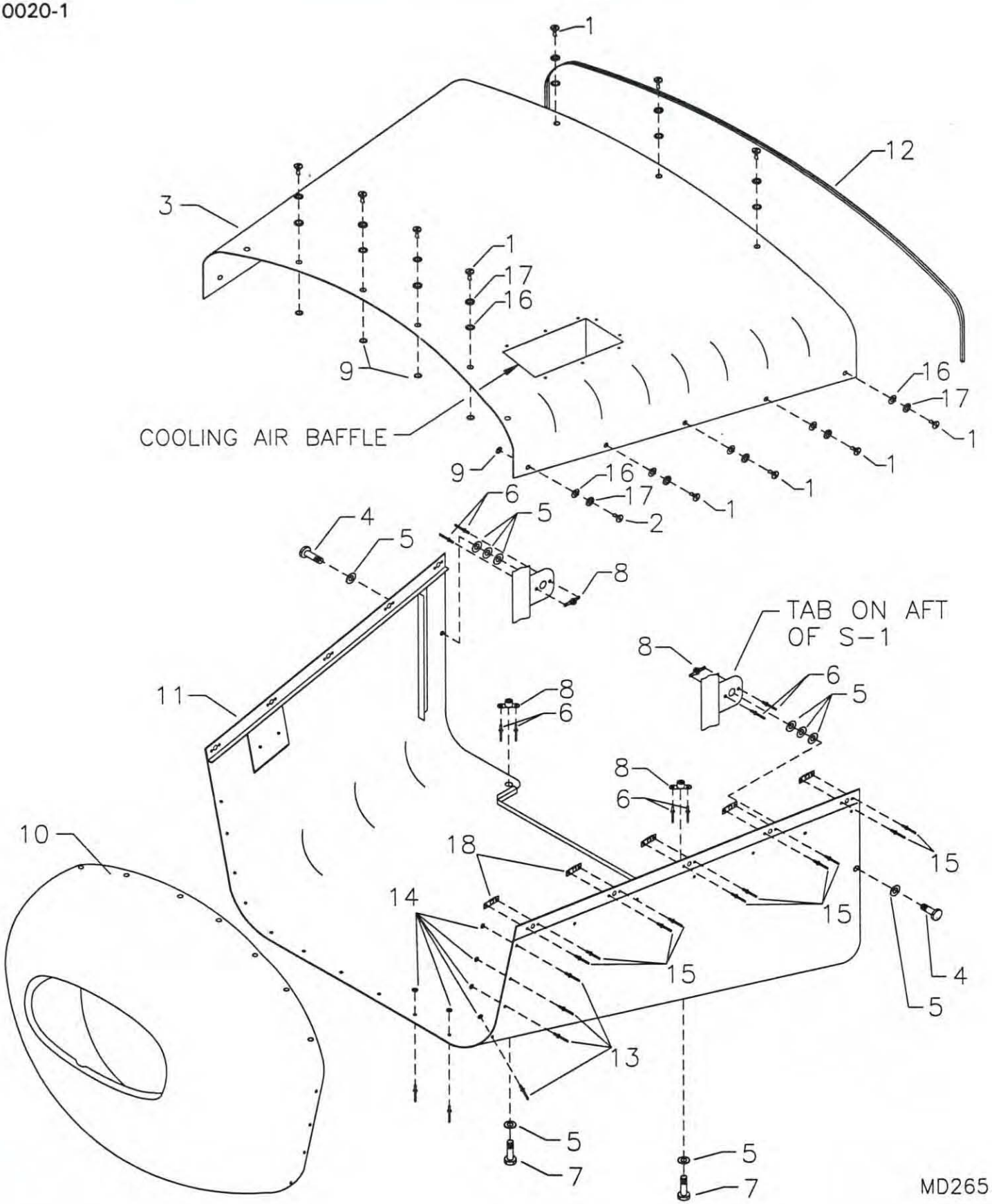

RANS S-6ES COYOTE II
COWLING ASSEMBLY 503

0020-01A

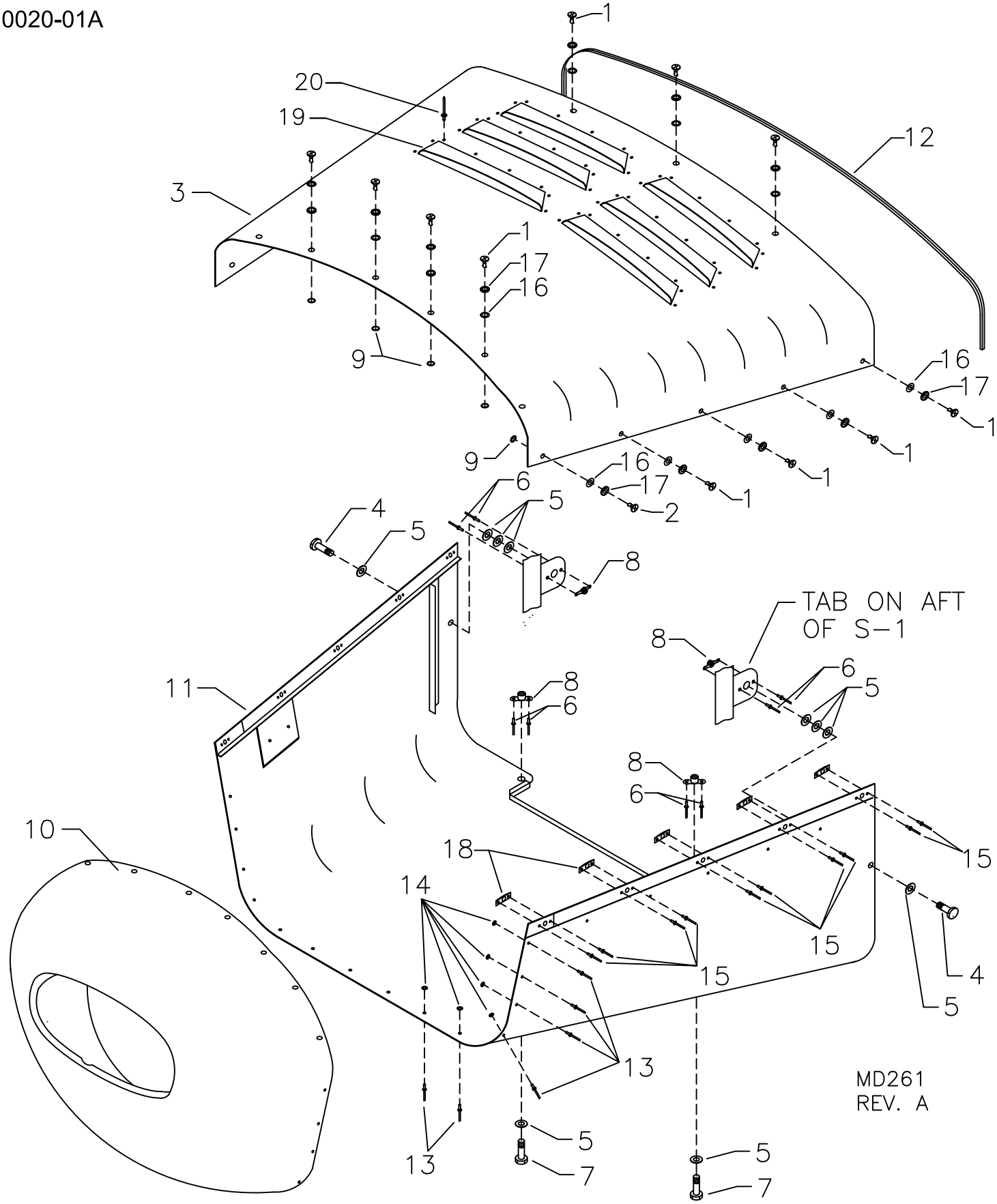

RANS S-6ES COYOTE II

09/12/2011 COWLING ASSEMBLY 582/912

S-6ES COYOTE II - COWLING

#	DESCRIPTION	PART NUMBER	QUANTITY
1 .	1/4 Turn Stud	#140	24
2 .	1/4 Turn Stud	#180	2
3 .	Cowling Top, 582/912	C-TOP-ES-582/912	1
4 .	3/16" Bolt	AN3-6A	2
5 .	3/16" Plastic Washer	PW-3	10
6 .	3/32" Aluminum Rivet **	40APR1/8	0
7 .	3/16" Bolt	AN3-4A	2
8 .	3/16" Nut Plate **	K-1000-3	0
9 .	Snap Ring	#101	26
10 .	Cowling Nose Bowl	C-NB	1
11 .	Cowling Bottom *	-----	0
12 .	Trim Loc	TRIM-LOC	14 ft
13 .	1/8" Aluminum Rivet - Cherry Q	AAPQ-42	17
14 .	1/8" Small Brass Washer	AN960-B4	15
15 .	3/32" Aluminum Rivet	40APR1/4	52
16 .	Wear Washer Nylon	#103	26
17 .	Rubber Washer	#201	26
18 .	1/4 Turn Receptacle	#302	26
19 .	Top Louver - Cowling	KPCW0024	6
20 .	3/32" Aluminum Rivet	40APR1/8	48

* Refer to BOTTOM COWLING ASSEMBLY
**Reference Firewall.

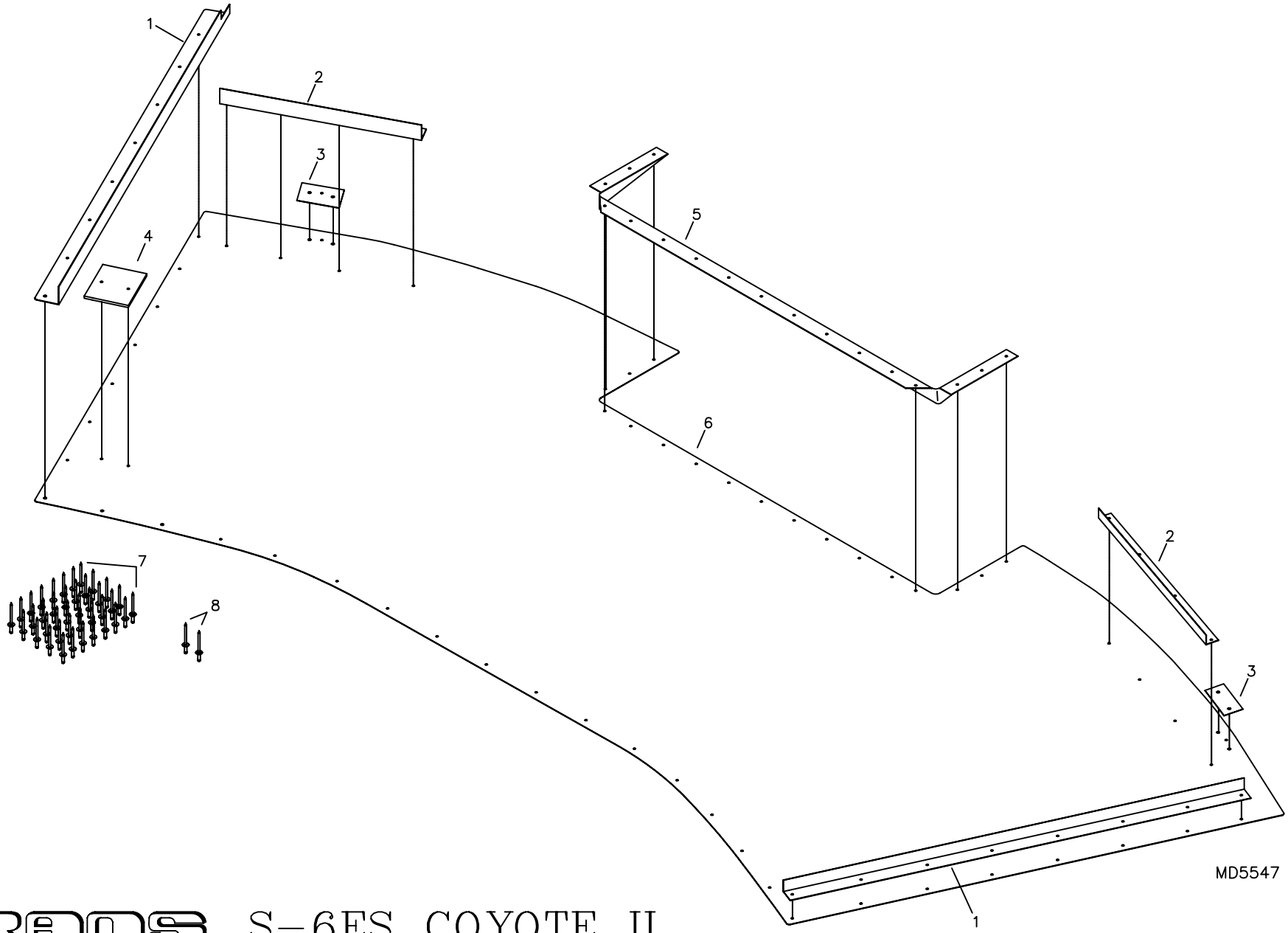

RANS S-6ES COYOTE II
BOTTOM COWLING ASSEMBLY

S-6ES COYOTE II - BOTTOM COWLING ASSEMBLY

#	DESCRIPTION	PART NUMBER	QUANTITY
1 .	Bottom Mating Flange - LH	KPCW0013-L	1
1 .	Bottom Mating Flange - RH	KPCW0013-R	1
2 .	Bottom Vertical Angle	KPCW0003	2
3 .	Bolt Reinforcement	KPCW0002	2
4 .	Muffler Pad	KPCW0023	1
5 .	Bottom Cowling Lip	BC-CL	1
6 .	Cowling Bottom	C-BOT-ES	1
7 .	1/8" Aluminum Rivet - Cherry-Q	AAPQ-41	45
8 .	1/8" Aluminum Rivet - Cherry-Q	AAPQ-42	2

RANS S-6ES COYOTE II RUDDER ASSEMBLY

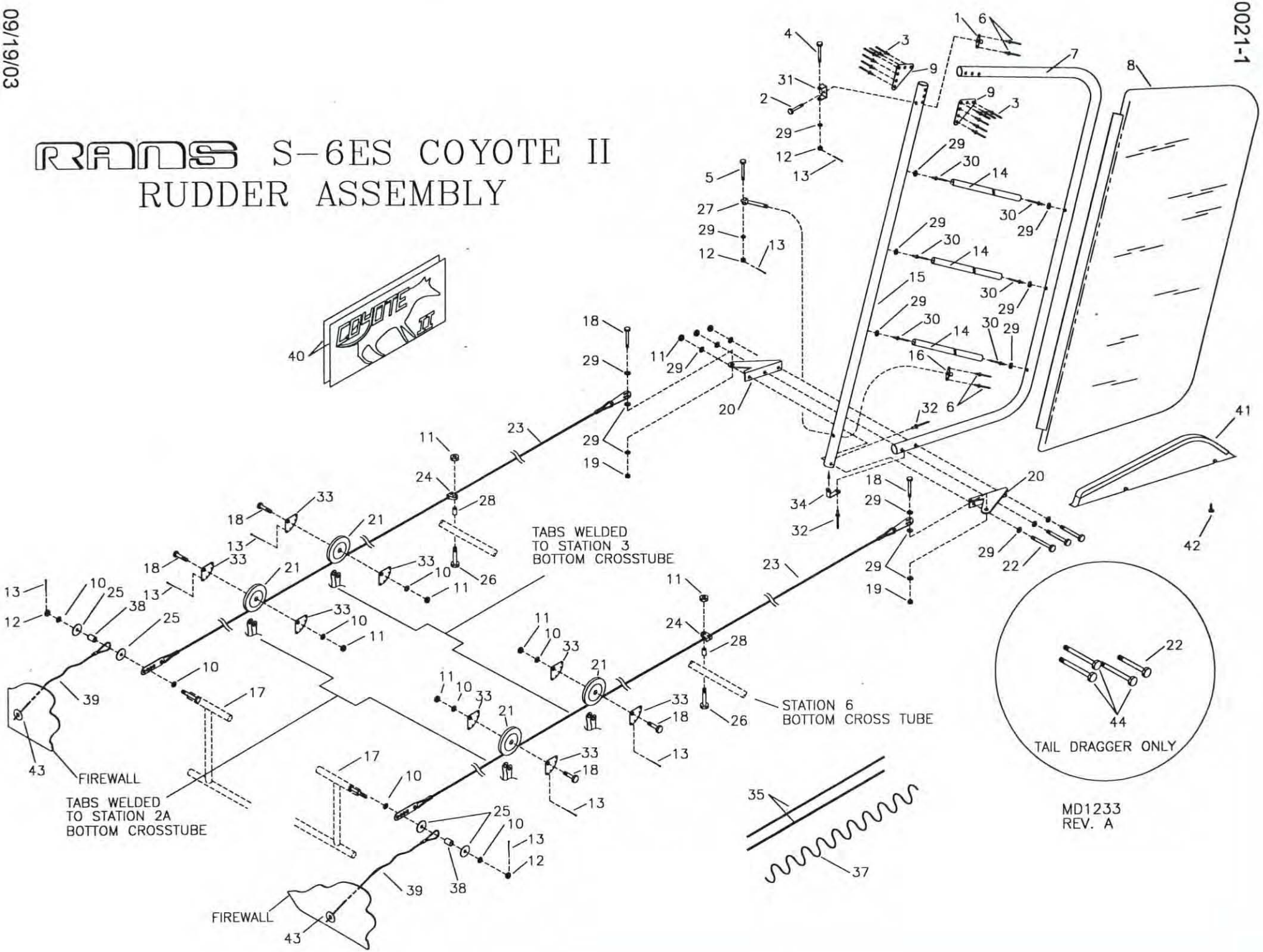

S-6ES COYOTE II - RUDDER SYSTEM

#	DESCRIPTION	PART NUMBER	QUANTITY
1.	3/16" Nut Plate	K-1000-3	1
2.	3/16" Bolt	AN3-13A	1
3.	1/8" Stainless Steel Pop Rivet - Cherry Q	CCPQ-42	12
4.	3/16" Bolt	AN3-15	1
5.	3/16" Bolt	AN3-5	1
6.	3/32" Aluminum Pop Rivet	40APR1/8	4
7.	Rudder Trailing Edge	KPRD0011	1
8.	Rudder Skin	TG-RSKIN-XL	1
9.	Gusset	KPAC0014	2
10.	3/16" Thin Washer	AN960-10L	8
11.	3/16" Shear Nut	AN364-1032A	9
12.	3/16" Castle Nut	AN310-3	2
13.	Small Cotter Pin	MS24665-134	8
14.	Aluminum Internal Brace, 1/2" x .035 x X **	KAAC0005-4	0
15.	Rudder Spar	KPRD0012	1
16.	1/4" Nut Plate	MS21047-04	1
17.	Rudder Pedals *	-----	0
18.	3/16" Bolt	AN3-6A	6
19.	3/16" Tensile Nut	AN365-1032A	2
20.	Rudder Horn, LH	TG-RHL	1
20.	Rudder Horn, RH	TG-RHR	1
21.	Small Pulley	AN210-1A	4
22.	3/16" Bolt (Trike Only)	AN3-15A	3
22.	3/16" Bolt (Taildragger Only)	AN3-15A	1
23.	Rudder Cable	S6-R-CAB	2
24.	Cable Guide	HA-144	2
25.	3/16" Plastic Washer	PW-3	4
26.	3/16" Bolt	AN3-17A	2
27.	1/4" Eyebolt	AN43B-13A	1
28.	Aluminum Bushing, 3/8" X .058 X 1/2" **	KAAC0005-3	0
29.	3/16" Thick Washer	AN960-10	19
30.	3/16" Aluminum Pop Rivet - Cherry Q	AAPQ-62	6
31.	Stainless Steel Hinge	W-HB	1
32.	3/16" Stainless Steel Pop Rivet - Cherry Q	CCPQ-64	2
33.	Small Pulley Cable Keeper	SP-CK	8
34.	90 Hummertang	T12-HT6 BENT	1
35.	1/16" Lacing Wires, (stick) 36" x 1/16"	TG-LW-1/16	2
36.	Loctite Blue	LOC-TITE	0
37.	Nylon Lace Up Rope	36 SEINE	5 ft
38.	Aluminum Bushing, 1/4" x .028 x 1/4" **	KAAC0005-2	0
39.	Bungee Return	KPCS0003	2
40.	Coyote II Decals	SKIN DECALS	2
41.	Rudder Lacing Cap ***	KPRD0035	1
42.	#6 Small Pan Head Screw	6RX1/2 PHS	1
43.	3/16" Large Washer	AN970-3	2
44.	3/16" Bolt (Taildragger Only)	AN3-20A	3

*See Floorboard.
**Builder must fabricate from raw stock.
***Builder trims to fit. Refer to text for details.

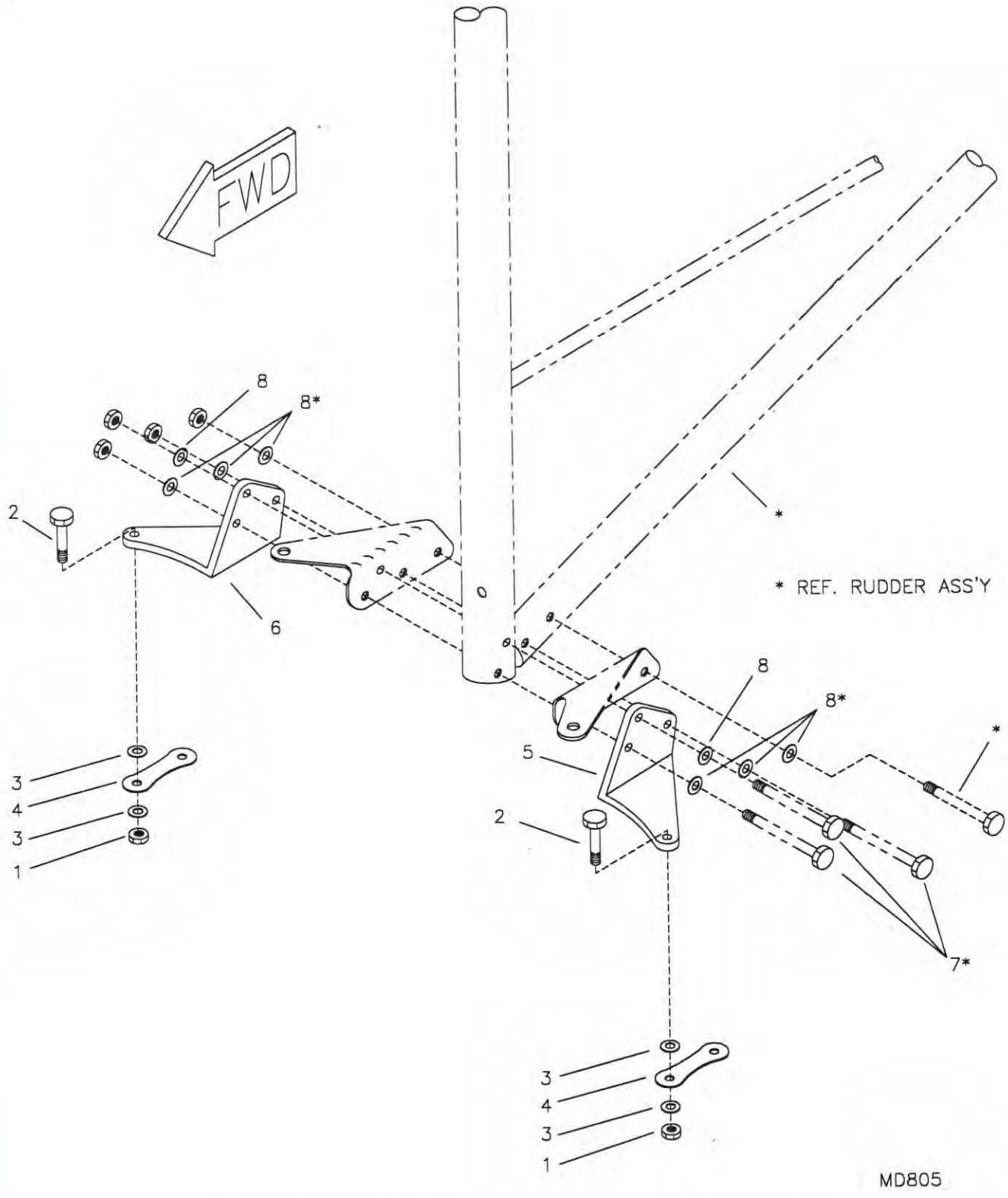

RANS S-6ES COYOTE II
TAILDRAGGER STEERING ASSEMBLY

S-6ES COYOTE II - TAILDRAGGER STEER HORN

#	DESCRIPTION	PART NUMBER	QUANTITY
1.	3/16" Shear Nut	AN364-1032A	2
2.	3/16" Bolt	AN3-5A	2
3.	3/16" Thin Washer	AN960-10L	4
4.	Hummertang	T12-HT6	2
5.	Tailwheel Steerhorn - LH	KPRD0048-L	1
6.	Tailwheel Steerhorn - RH	KPRD0048-R	1
7.	3/16" Bolt *	-----	0
8.	3/16" Thick Washer	AN960-10	2

*Referenced from Rudder Assembly.

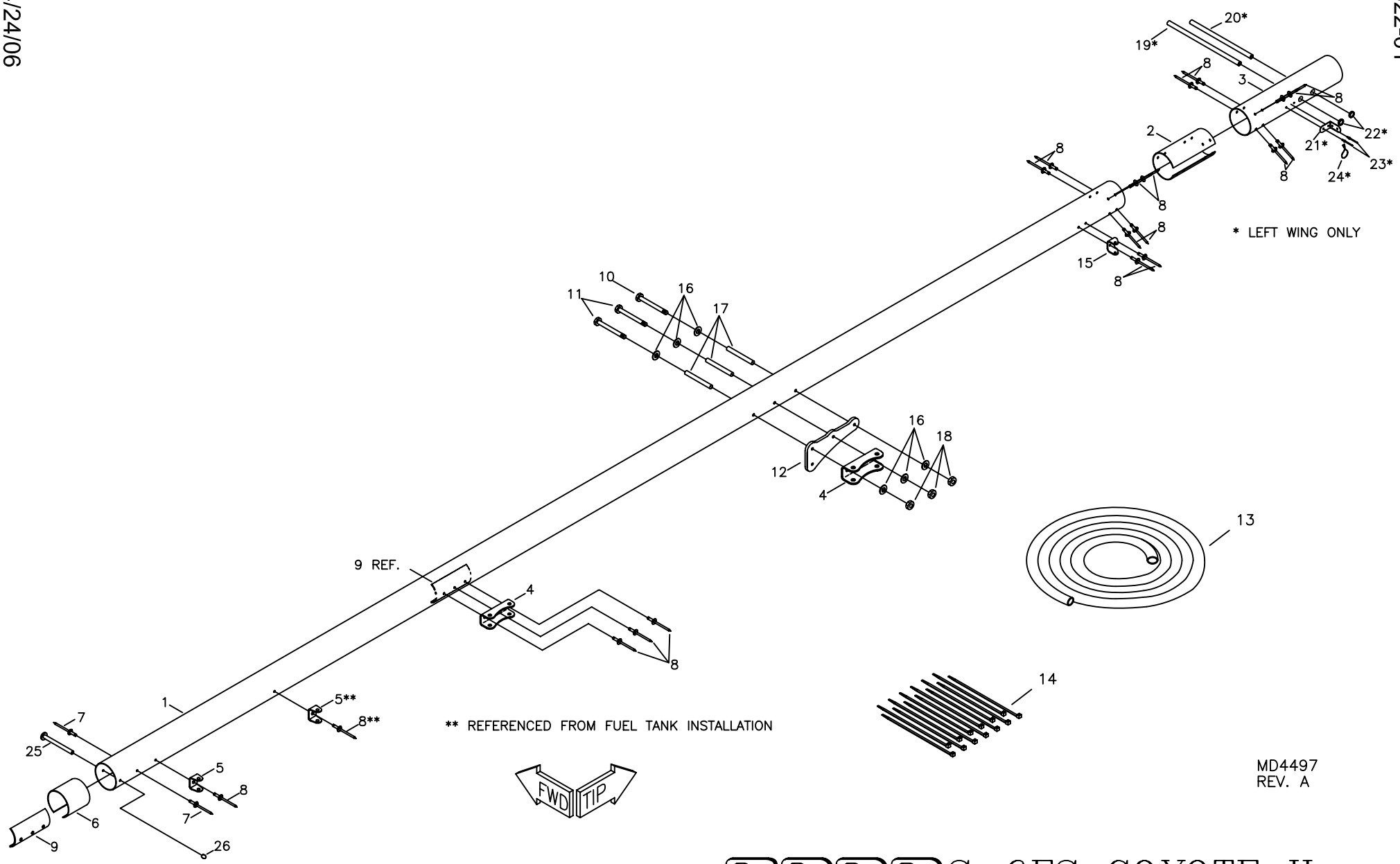

RANS S-6ES COYOTE II SPORT WING: LEADING EDGE SPAR ASSEMBLY

S-6ES COYOTE II - SPORT WING: LEADING EDGE SPAR ASSEMBLY

#	DESCRIPTION	PART NUMBER	QUANTITY
1.	Leading Edge Spar	KPWI0415	2
2.	Leading Edge Spar - Doubler	KPWI0419	2
3.	Leading Edge Spar - Tip	KPWI0417	2
4.	Long Wing Channel	W-WCL	4
5.	Horizontal Attach Bracket	S2-SAB	2
6.	Leading Edge Spar - Root Doubler	KPWI0355	2
7.	3/16" Stainless Steel Rivet	CCPQ-62	4
8.	3/16" Stainless Steel Rivet	CCPQ-64	36
9.	Leading Edge Spar Doubler	KPWI0264	2
10.	1/4" Bolt	AN4-35ALP	2
11.	1/4" Bolt	AN4-36ALP	4
12.	FWD Strut Plate	W-SAP-LE	2
13.	1/4" Fuel/Pitot/Static Line, Blue *	FS-FL	40 ft
14.	Nylon Ties *	N-TIES	13
15.	1" U-Bracket	KPAC0180	2
16.	1/4" Thin Washer	AN960-416L	12
17.	Aluminum Bushing, 3/8 x .058" x 3"	SB-3/8X3	6
18.	1/4" Shear Nut	AN364-428A	6
19.	Static Tube *	W-ST	1
20.	Pitot Tube *	W-ASI-P	1
21.	Attach Tang *	U-ST001	1
22.	Line Clamp, 3/8" *	FS-LCL 3/8	2
23.	1/8" Aluminum Rivet - Cherry Q *	AAPQ-42	2
24.	Safety Wire *, **	SAFETY WIRE	0
25.	3/8" Clevis Pin	MS20392-5C101	2
26.	Loc Ring	RL 27 1/4	2

*Left wing only - Pitot/Static system.
**Builder provides.

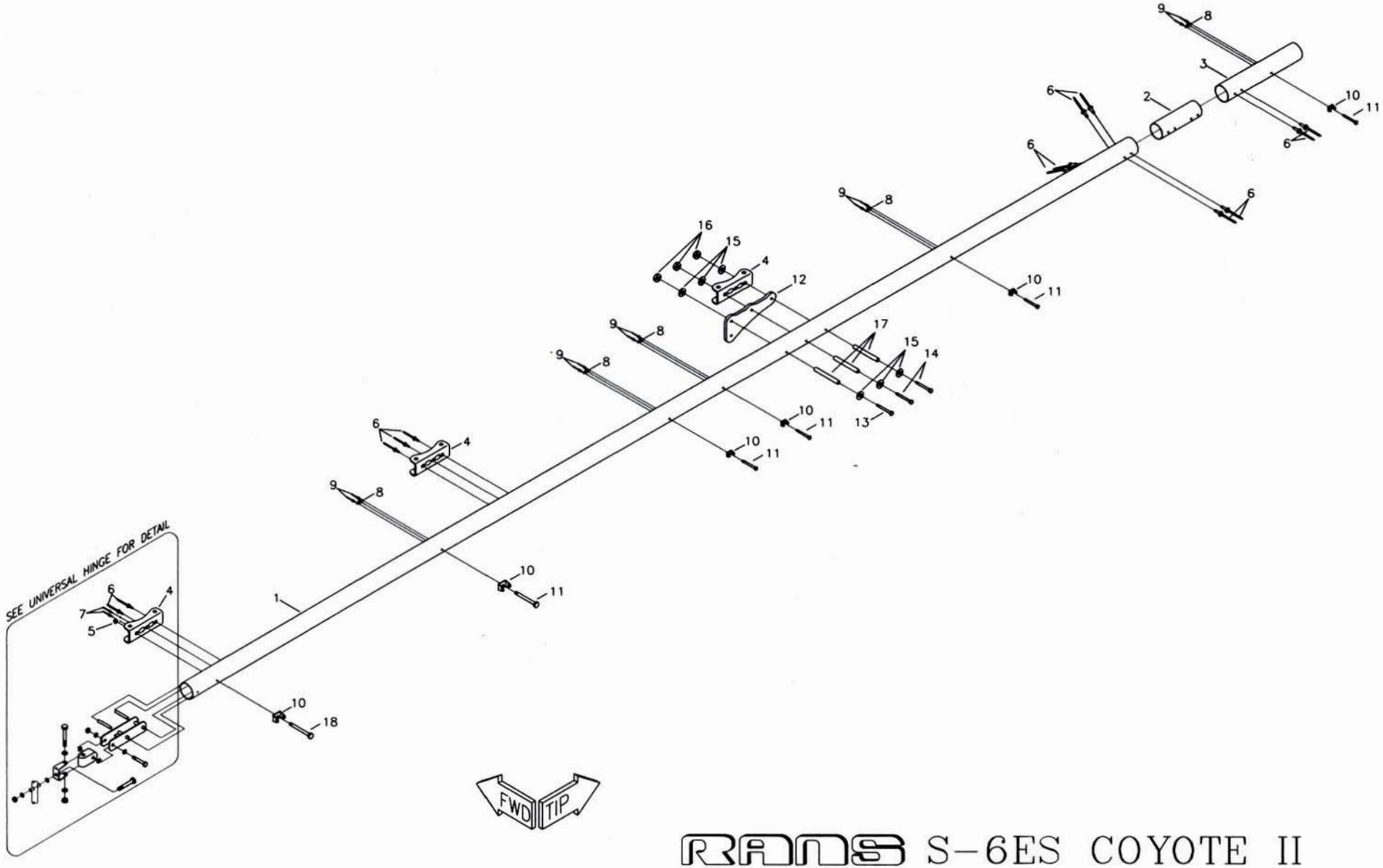

MD4498

RANS S-6ES COYOTE II SPORT WING: TRAILING EDGE SPAR ASSEMBLY

S-6ES COYOTE II - SPORT WING: TRAILING EDGE SPAR ASSEMBLY

#	DESCRIPTION	PART NUMBER	QUANTITY
1.	Trailing Edge Spar	KPWI0416	2
2.	Trailing Edge Spar - Doubler	KPWI0420	2
3.	Trailing Edge Spar - Tip	KPWI0418	2
4.	Long Wing Channel	W-WCL	6
5.	3/16" Side by Side Nut Plate	MS21086-L3	2
6.	3/16" Stainless Steel Rivet	CCPQ-64	34
7.	3/32" Aluminum Rivet	40APR1/4	4
8.	3/16" Nut Plate	K-1000-3	10
9.	3/32" Aluminum Rivet	40APR1/8	20
10.	Stainless Steel Hinge	W-HB	12
11.	3/16" Bolt	AN3-23A	10
12.	AFT Strut Plate	W-SAP-TE	2
13.	1/4" Bolt	AN4-25ALP	2
14.	1/4" Bolt	AN4-26ALP	4
15.	1/4" Thin Washer	AN960-416L	12
16.	1/4" Shear Nut	AN364-428A	6
17.	Aluminum Bushing 3/8" x .058 x 2"	SB-3/8X2	6
18.	3/16" Bolt	AN3-24A	2

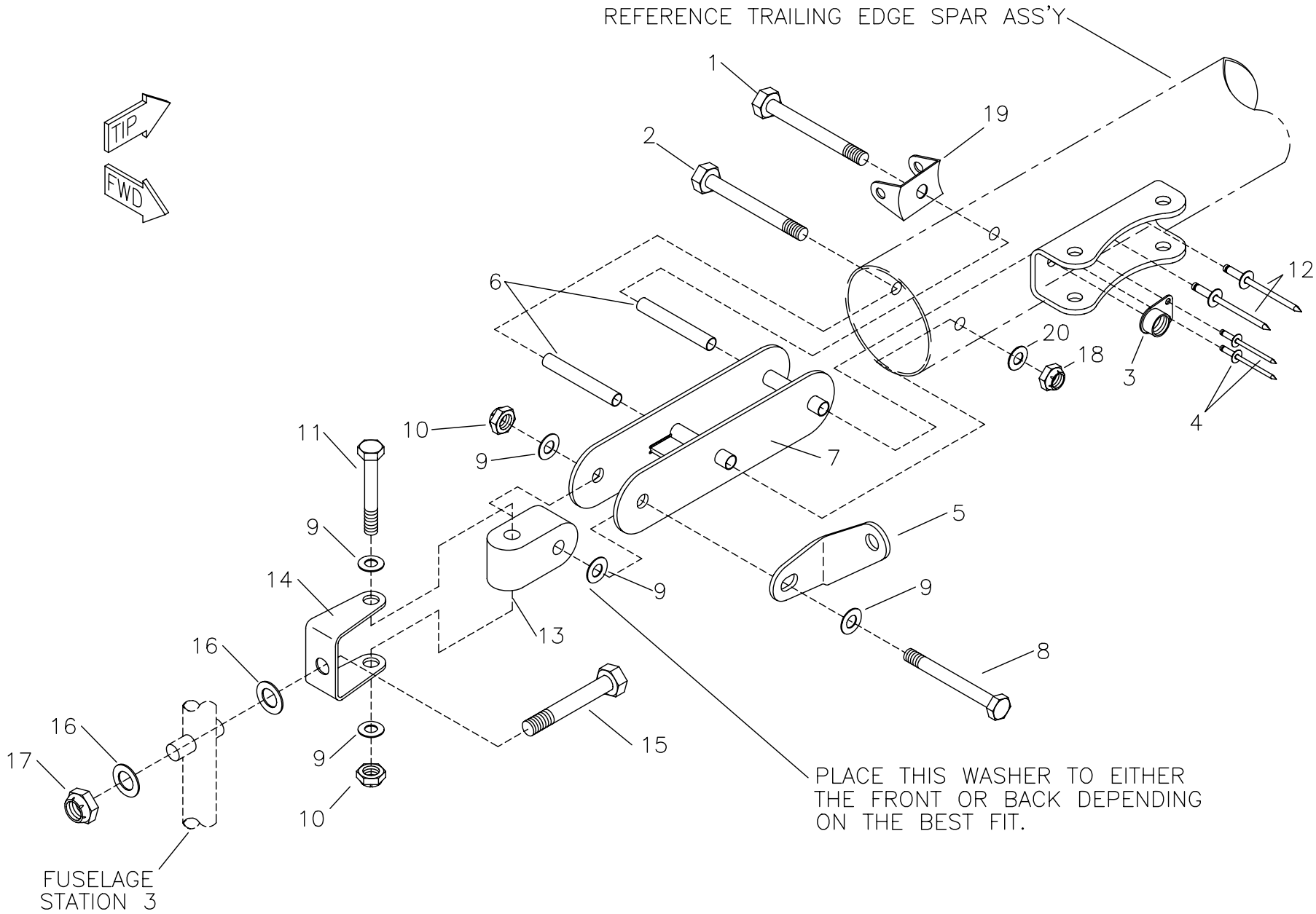

RANS S-6ES COYOTE II
SPORT WING: UNIVERSAL HINGE

MD4499

S-6ES COYOTE II - SPORT WING: UNIVERSAL HINGE

#	DESCRIPTION	PART NUMBER	QUANTITY
1.	3/16" Bolt **	AN3-24A	0
2.	3/16" Bolt	AN3-23A	2
3.	Side-by-Side Nut Plate **	MS21086-L3	0
4.	3/32" Aluminum Pop Rivet **	40APR1/4	0
5.	"L" Bracket ***	KPWI0190-L	0
5.	"R" Bracket ***	KPWI0190-R	0
6.	Aluminum Bushing, 1/4" x .028 x 1 7/8" *	KAAC0005-2	0
7.	Trailing Edge Spar Root Fitting	W-TES-RF	2
8.	1/4" Bolt	AN4-17A	2
9.	1/4" Thick Washer	AN960-416	12
10.	1/4" Shear Nut	AN364-428A	4
11.	1/4" Bolt	AN4-16A	2
12.	3/16" Stainless Steel Rivet **	CCPQ-64	0
13.	Hinge Cube	W-H-CUBE	2
14.	Stainless Steel U Bracket	SU-118	2
15.	5/16" Bolt	AN5-20A	2
16.	5/16" Thick Washer	AN960-516	4
17.	5/16" Tensile Nut	AN365-524A	2
18.	3/16" Shear Nut	AN364-1032A	2
19.	Stainless Steel Hinge **	W-HB	0
20.	3/16" Thick Washer	AN960-10	2

*Builder must fabricate from raw stock.
**Referenced from Trailing Edge Spar.
***Referenced from root rib tension system.

RANS S-6ES COYOTE II

SPORT WING: INTERNAL BRACING TUBE ASSEMBLY

S-6ES COYOTE II - SPORT WING: INTERNAL BRACING TUBE ASSEMBLY

#	DESCRIPTION	PART NUMBER	QUANTITY
1.	Rib Gusset **	KPWI0467	0
2.	3/16" Thick Washer	AN960-10	26
3.	3/32" Aluminum Rivet	40APR1/8	4
4.	Bell Crank Gusset, LH *	CS-BELGU-LH	0
4.	Bell Crank Gusset, RH *	CS-BELGU-RH	0
5.	3/16" Bolt	AN3-15A	22
6.	3/16" Thin Washer	AN960-10L	26
7.	Outer Compression Tube	KPWI0413	2
8.	3/16" Bolt	AN3-14A	2
9.	3/16" Shear Nut	AN364-1032A	24
10.	Jury Strut Bracket	JS-BK	2
11.	Middle Drag Brace	KPWI0412	2
12.	Flap Compression Tube	KPWI0411	2
13.	3/16" Single Ear Nut Plate	MS21051-L3	2
14.	Teleflex Retainer	W-TEL-R	2
15.	3/16" Bolt	AN3-16A	2
16.	3/16" Tensile Nut	AN365-1032A	2
17.	Root Drag Brace	KPWI0410	2
18.	Root Compression Tube	KPWI0408	2
19.	Compression Tube Doubler *	CS-CTD	0
20.	Outer Drag Brace	KPWI0414	2

*Referenced from Aileron Push Pull System.
**Referenced from Rib Assembly.

08/14/2008

0022C-01

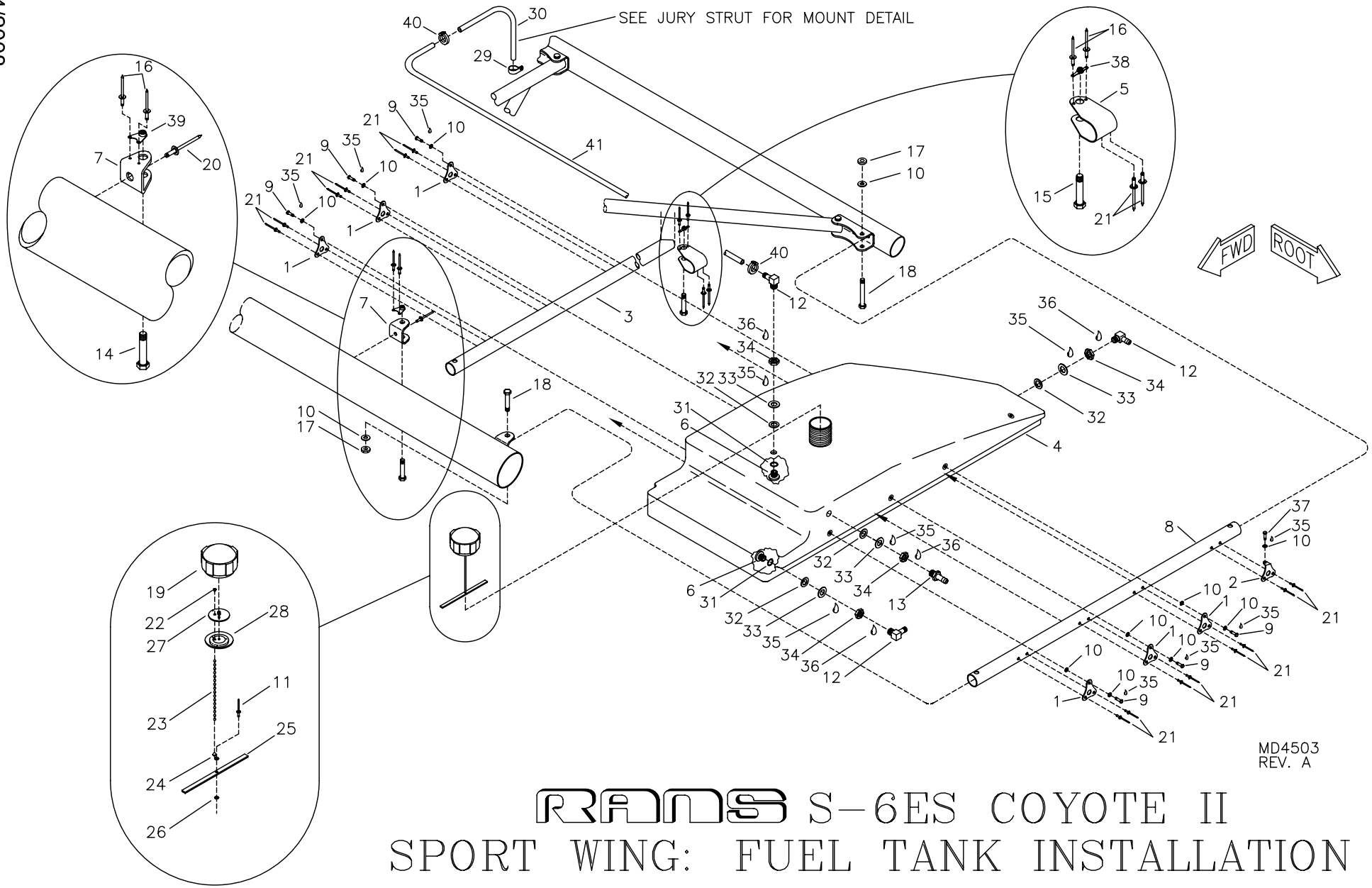

RANS S-6ES COYOTE II
SPORT WING: FUEL TANK INSTALLATION

S-6ES COYOTE II - SPORT WING: FUEL TANK INSTALLATION

#	DESCRIPTION	PART NUMBER	QUANTITY
1 .	Wing Tank - Mount Bracket	KPFS0007	12
2 .	Wing Tank - AFT Mount Bracket, LH	KPFS0011-L	1
2 .	Wing Tank - AFT Mount Bracket, RH	KPFS0011-R	1
3 .	Outer Tank Support	KPWI0409	2
4 .	Fuel Tank, LH	KPFS0005-L	1
4 .	Fuel Tank, RH	KPFS0005-R	1
5 .	U Bracket	KPAC0055	2
6 .	Tank Withdrawal Fitting	KPFS0017	8
7 .	Attach Bracket	S2-SAB	2
8 .	Root Compression Tube *	KPWI0408	0
9 .	3/16" Bolt	AN3-4A	12
10 .	3/16" Thick Washer	AN960-10	20
11 .	1/8" Stainless Steel Pop Rivet - Cherry Q	CCPQ-44	24
12 .	90 Withdrawal Fitting	8342	6
13 .	Straight Withdrawal Fitting	8330	2
14 .	3/16" Bolt	AN3-15A	2
15 .	3/16" Bolt	AN3-14A	2
16 .	3/32" Aluminum Pop Rivet	40APR1/8	8
17 .	3/16" Shear Nut *	AN364-1032A	0
18 .	3/16" Bolt *	AN3-15A	0
19 .	Fuel Cap	KSFS0007	2
20 .	3/16" Stainless Steel Pop Rivet - Cherry Q	CCPQ-64	2
21 .	1/8" Stainless Steel Pop Rivet - Cherry Q	CCPQ-42	32
22 .	Bead Chain - Retainer Sleeve	KSHW0014	2
23 .	#3 Bead Chain	KSHW0012	14 in
24 .	Bead Chain - End Coupling	KSHW0013	2
25 .	Plastic Retainer	KPFS0012	2
26 .	1/8" Small Brass Washer	AN960-B4	2
27 .	Plastic Baffle ***	KSFS0012	0
28 .	Rubber Gasket ***	KSFS0013	0
29 .	Plain Clamp	AN742-D4	2
30 .	Vent Tube	KPFS0064	2
31 .	O-Ring	KSFS0009	8
32 .	Rubber Washer	KSFS0010	8
33 .	1/2" Thick Washer	AN960-816	8
34 .	Nut-Flared Tube Bulkhead	AN924-5D	8
35 .	Loctite Blue	LOC-TITE	0
36 .	Thread Sealant **	KSAC0014	0
37 .	3/16" Bolt	AN3-3A	2
38 .	3/16" Nut Plate	K-1000-3	2
39 .	3/16" Corner Nut Plate	MS21073-L3	2
40 .	Line Clamp, 1/2" I.D.	FS-LCL 1/2	4
41 .	1/4" Black Fuel Line	KSFS0002	8 ft

*Referenced from wing frame assembly.
**Thread Sealant (builder provides) is recommended but Loctite Blue can also be used.
***Supplied with Fuel Cap.

06/05/08

0022D-01

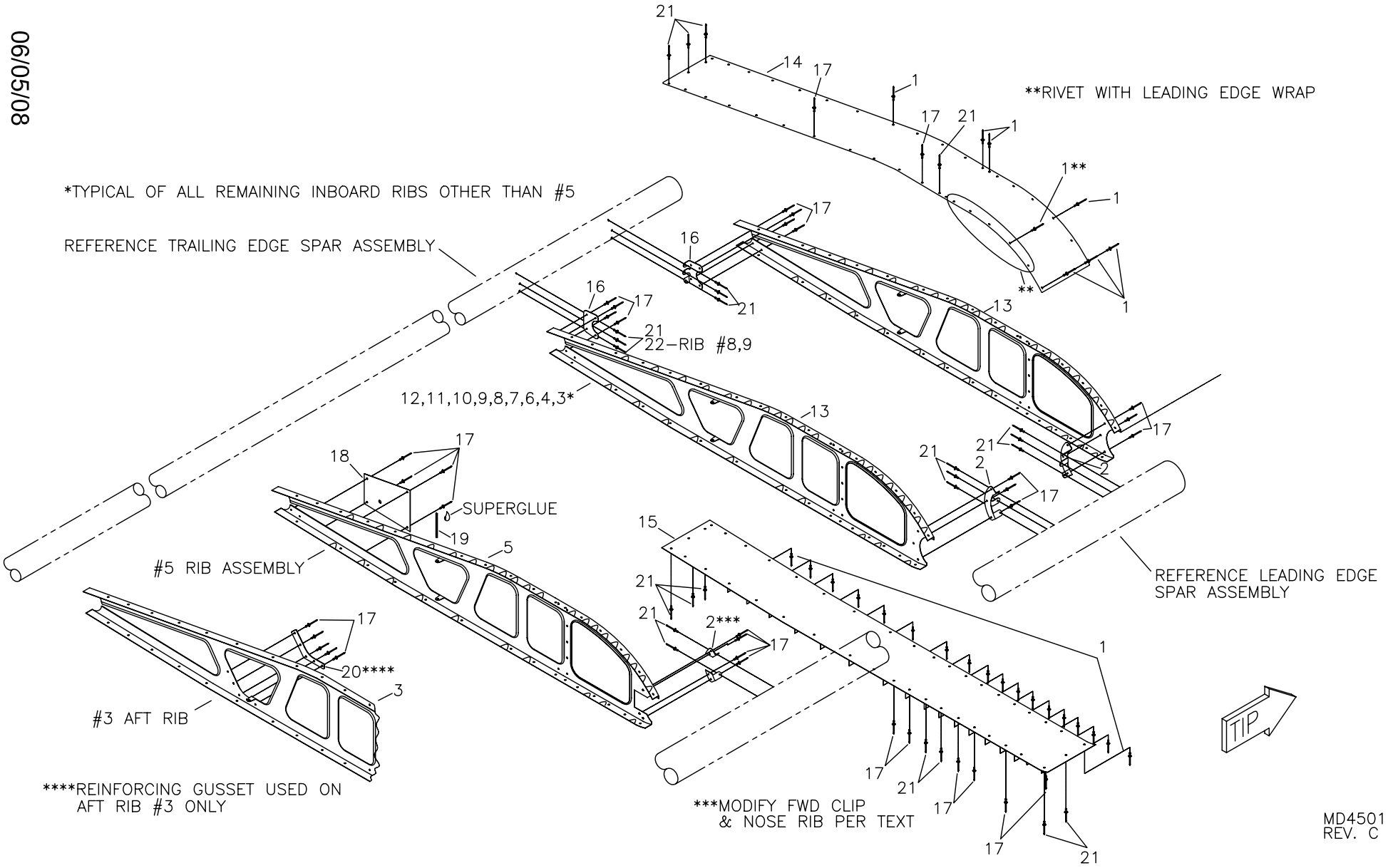

RANS S-6ES COYOTE II SPORT WING: RIB ASSEMBLY

S-6ES COYOTE II - SPORT WING: RIB ASSEMBLY

#	DESCRIPTION	PART NUMBER	QUANTITY
1 .	1/8" Stainless Steel Rivet - Flush	CCC-42	90
2 .	Rib Attach Clip - FWD	KPWI0459	24
3 .	Rib #3 - LH	KPWI0522-L	1
3 .	Rib #3 - RH	KPWI0522-R	1
4 .	Rib #4 - LH	KPWI0523-L	1
4 .	Rib #4 - RH	KPWI0523-R	1
5 .	Rib #5 - LH	KPWI0524-L	1
5 .	Rib #5 - RH	KPWI0524-R	1
6 .	Rib #6 - LH	KPWI0525-L	1
6 .	Rib #6 - RH	KPWI0525-R	1
7 .	Rib #7 - LH	KPWI0526-L	1
7 .	Rib #7 - RH	KPWI0526-R	1
8 .	Rib #8 - RH	KPWI0527-R	1
8 .	Rib #8 - LH	KPWI0527-L	1
9 .	Rib #9 - RH	KPWI0528-R	1
9 .	Rib #9 - LH	KPWI0528-L	1
10 .	Rib #10 - LH	KPWI0529-L	1
10 .	Rib #10 - RH	KPWI0529-R	1
11 .	Rib #11 - LH	KPWI0530-L	1
11 .	Rib #11 - RH	KPWI0530-R	1
12 .	Rib #12 - LH	KPWI0531-L	1
12 .	Rib #12 - RH	KPWI0531-R	1
13 .	Rib #13 - LH	KPWI0532-L	2
13 .	Rib #13 - RH	KPWI0532-R	2
14 .	Tip Skin - Upper	KPWI0470	2
15 .	Tip Skin - Lower	KPWI0471	2
16 .	Rib Attach Clip - AFT	KPWI0460	22
17 .	1/8" Aluminum Rivet - Cherry Q	AAPQ-41	315
18 .	Rib Gusset	KPWI0467	2
19 .	Serrated Grommet Strip	KSAC0023	2 in
20 .	Gusset, Rib #3	KPWI0494	2
21 .	1/8" Aluminum Pop Rivet - Cherry Q	AAPQ-42	180
22 .	1/8" Aluminum Pop Rivet - Cherry Q	AAPQ-44	12

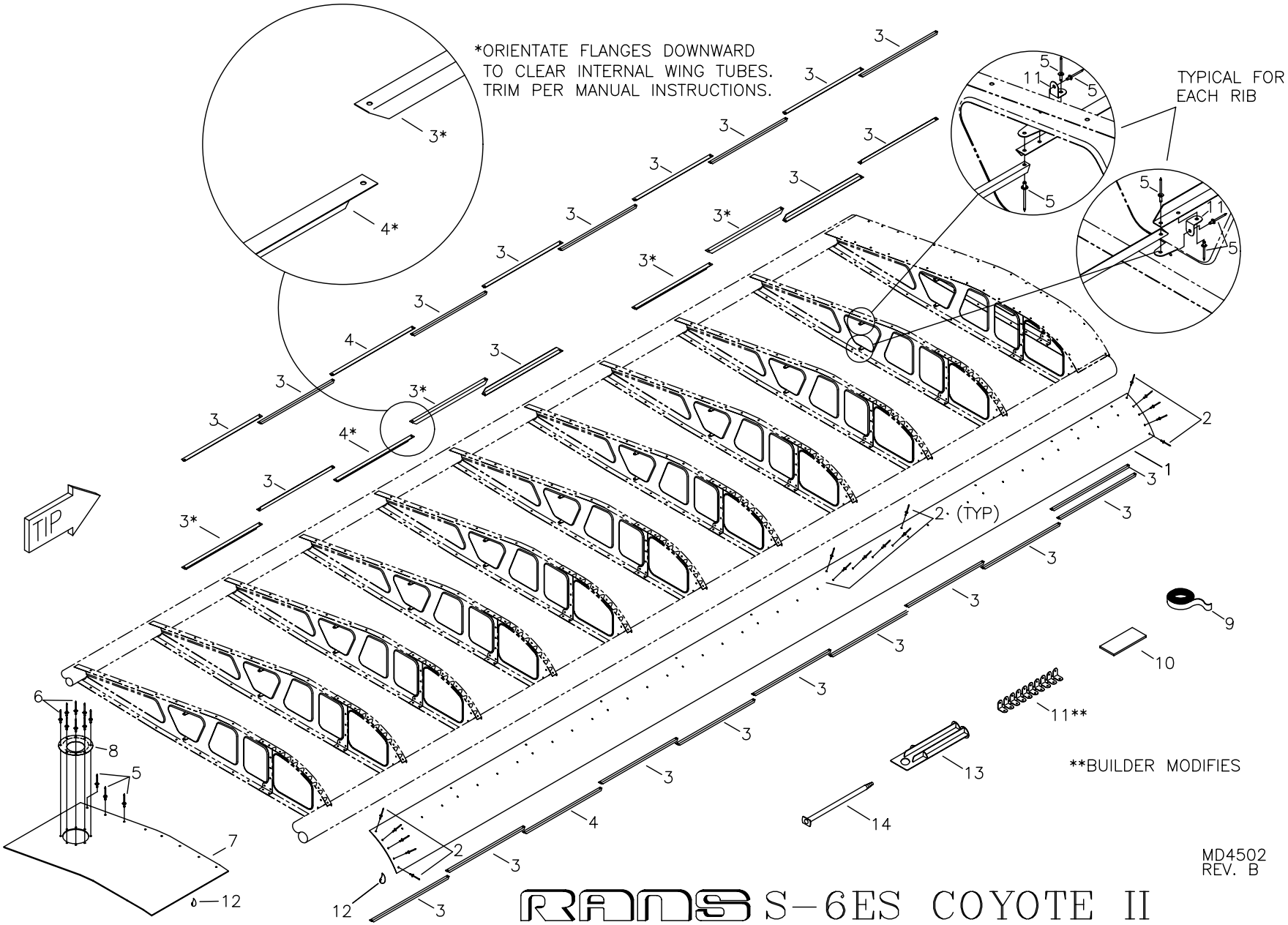

RANS S-6ES COYOTE II
SPORT WING: WING WRAPS
& RIB STRINGER INSTALLATION

S-6ES COYOTE II - SPORT WING: WING WRAPS & RIB STRINGER INSTALL

#	DESCRIPTION	PART NUMBER	QUANTITY
1 .	Leading Edge Wrap	KPWI0466	2
2 .	1/8" Stainless Steel Rivet - Flush	CCC-42	130
3 .	Rib Stringer - Short	KPWI0490	54
4 .	Rib Stringer - Long	KPWI0491	6
5 .	1/8" Aluminum Rivet	AAPQ-41	120
6 .	1/8" Aluminum Pop Rivet - Avex	1691-0410	24
7 .	Root Skin	KPWI0469	2
8 .	Upper Root Skin Scupper - Wing	KPWI0206	2
9 .	Acrylic Foam Tape ***	-----	0
10 .	1" Black Foam Tape	KSAC0011	2 in
11 .	Rib Stringer Attach Reinforcement Angle *	KPWI0500	4
12 .	DP-460 Epoxy Adhesive **	DP-460	0
13 .	Plunger **	AD0627	0
14 .	Mixer Tube **	AD0293	0

*Builder modifies.
**Builder Supplied or J-B Weld recommended.
*** Builder Supplied

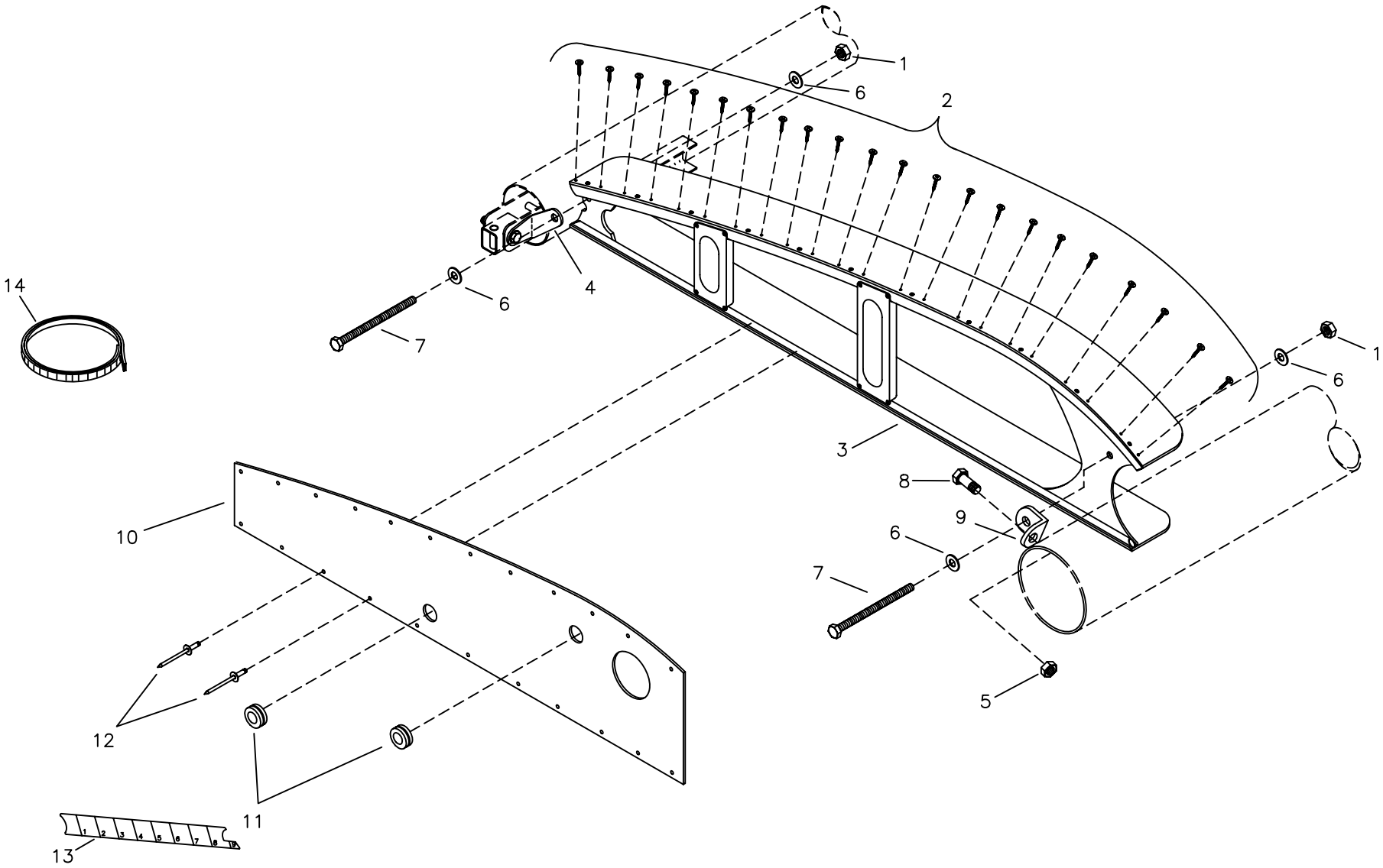

MD4522

RANS S-6ES COYOTE II
SPORT WING: ROOT RIB TENSION SYSTEM

S-6ES COYOTE II - SPORT WING: ROOT RIB TENSION SYSTEM

#	DESCRIPTION	PART NUMBER	QUANTITY
1 .	1/4" Tensile Nut	AN365-428A	4
2 .	#8 Pan Head Screw	8X1/2 PHS	92
3 .	Root Rib, LH	KAWI0032-L	1
3 .	Root Rib, RH	KAWI0032-R	1
4 .	"L" Bracket	KPWI0190-R	1
4 .	"L" Bracket	KPWI0190-L	1
5 .	3/16" Shear Nut	AN364-1032A	2
6 .	1/4" Thin Washer	AN960-416L	8
7 .	1/4" Bolt *	KSHW0049	4
8 .	3/16" Bolt	AN3-5A	2
9 .	"L" Bracket	KPWI0170	2
10 .	Root Rib Skin - Sport Wing	KPWI0405	2
11 .	Rubber Grommet	KSHW0085	4
12 .	1/8" Aluminum Pop Rivet - Avex	1691-0410	64
13 .	Sight Gauge Decal-LH **	KPWI0261-L	0
13 .	Sight Gauge Decal-RH **	KPWI0261-R	0
14 .	Serrated Grommet Strip	KSAC0023	6 in

*This bolt is nearly threaded it's whole length.
**Included on Experimental Decal Sheet

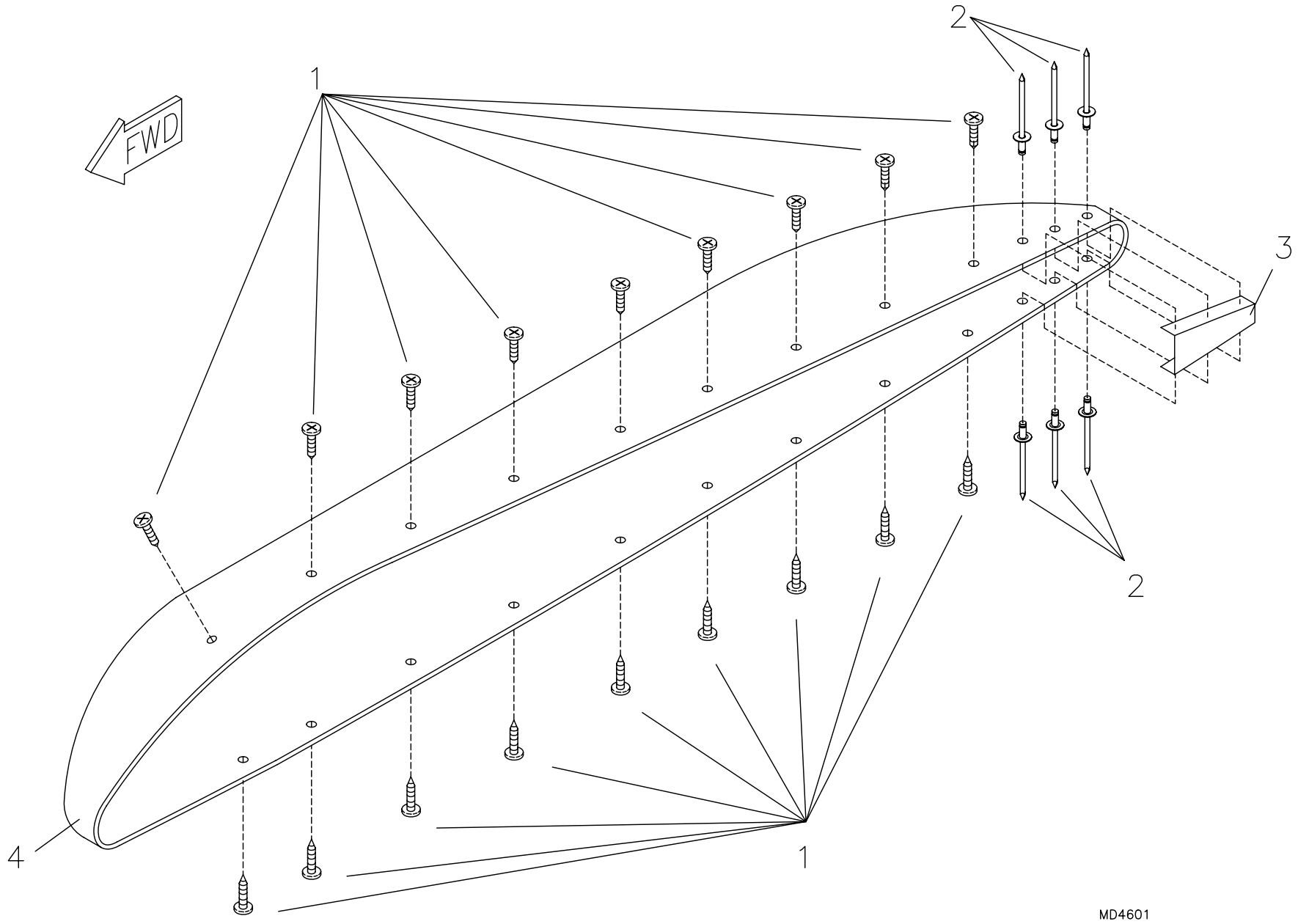

RANS S-6ES COYOTE II
SPORT WING: WING TIP INSTALLATION

S-6ES COYOTE II - SPORT WING: WING-TIP INSTALLATION

#	DESCRIPTION	PART NUMBER	QUANTITY
1.	#6 Pan Head Screw	6RX1/2 PHS	40
2.	1/8" Aluminum Pop Rivet - Avex	1691-0410	12
3.	Wing Tip Close Out - Right	KPWI0479-R	1
3.	Wing Tip Close Out - Left	KPWI0479-L	1
4.	Wing Tip - Right	KPWI0478-R	1
4.	Wing Tip - Left	KPWI0478-L	1

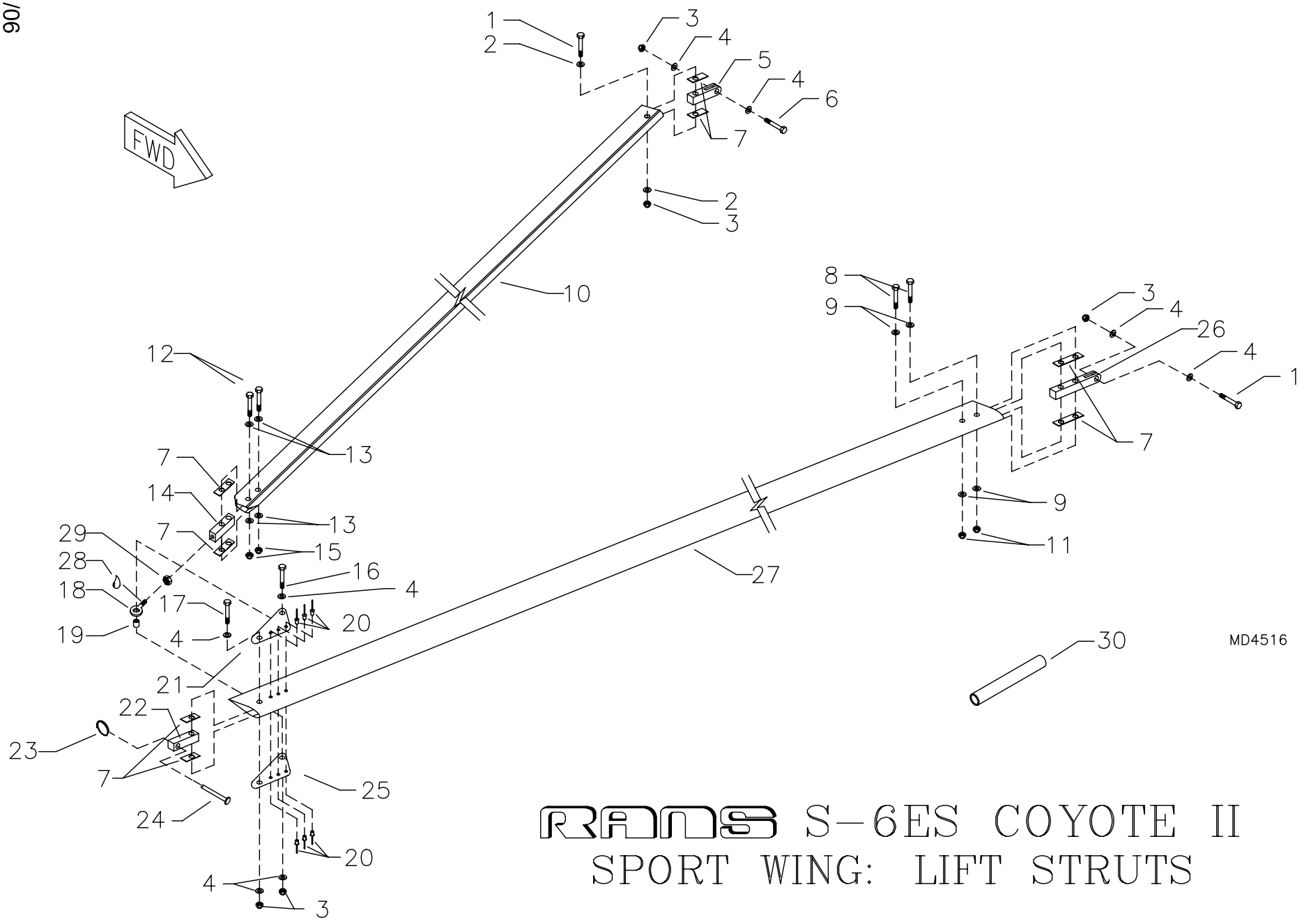

RANS S-6ES COYOTE II
SPORT WING: LIFT STRUTS

S-6ES COYOTE II - SPORT WING: LIFT STRUT KIT

#	DESCRIPTION	PART NUMBER	QUANTITY
1.	5/16" Bolt	AN5-13A	4
2.	5/16" Thin Washer	AN960-516L	4
3.	5/16" Shear Nut	AN364-524A	10
4.	5/16" Thick Washer	AN960-516	16
5.	AFT Upper Lift Strut Connector	LS-ACU-2	2
6.	5/16" Bolt	AN5-12A	2
7.	Universal Shim *	UNV-SHIM	4
8.	1/4" Bolt	AN4-15A	4
9.	1/4" Thin Washer	AN960-416L	8
10.	AFT Lift Strut	KPLS0044	2
11.	1/4" Shear Acorn Nut	52NKTE-048	4
12.	3/16" Bolt	AN3-13A	4
13.	3/16" Thick Washer	AN960-10	8
14.	Adjustor End	S-AE-3/4	2
15.	3/16" Shear Acorn Nut	22NKM02	4
16.	5/16" Bolt	AN5-11A	2
17.	5/16" Bolt	AN5-17A	2
18.	Rod End	3/8X24 ROD END	2
19.	Aluminum Bushing, 3/8" x .035 x 1/2" **	KAAC0020-1	0
20.	3/16" Stainless Steel Pop Rivet - Cherry Q	CCPQ-64	12
21.	Gusset Plate	116-S-GUSS-A	2
22.	Strut Connector, Aluminum	LS-SC-F-ALUM	2
23.	Loc Ring	RL 27 5/16	2
24.	5/16" Clevis Pin	MS20392-4C33	2
25.	Gusset Plate	116-S-GUSS-B	2
26.	FWD Upper Lift Strut Connector	LS-FCU	2
27.	FWD Lift Strut	KPLS0045	2
28.	Loctite	LOC-TITE	0
29.	3/8" Plain Nut	MS35650-3382	2
30.	Adjustable Lift Strut - Raw Stock Kit	KAAC0020	1

*Builder fabricates as required; refer to text.
**Builder must fabricate from raw stock.

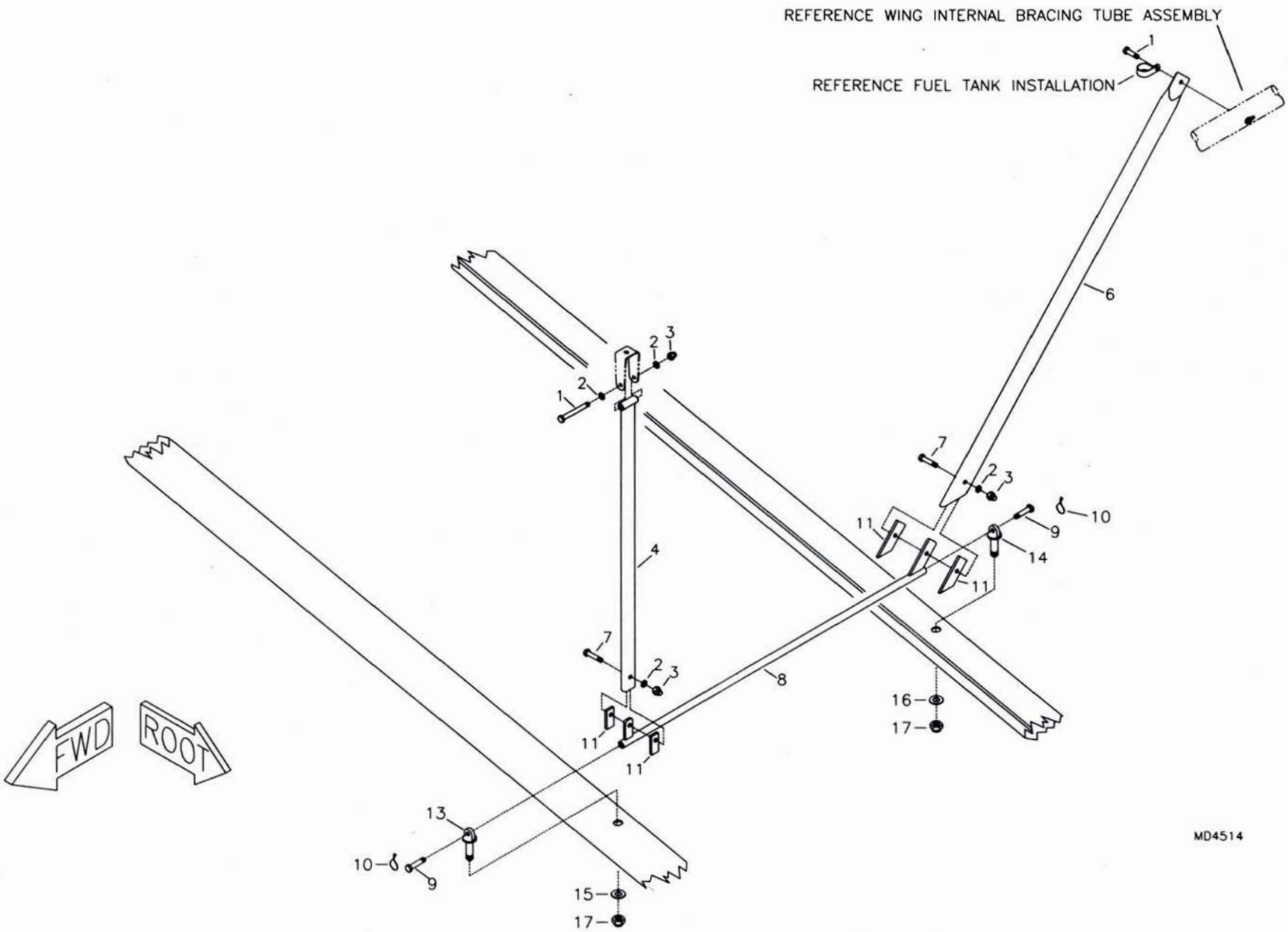

RANS S-6ES COYOTE II
SPORT WING: JURY STRUTS

S-6ES COYOTE II - SPORT WING: JURY STRUTS

#	DESCRIPTION	PART NUMBER	QUANTITY
1 .	3/16" Bolt	AN3-14A	4
2 .	3/16" Thick Washer	AN960-10	8
3 .	3/16" Shear Acorn Nut	22NKM02	6
4 .	FWD Jury Strut *	KPJS0010	2
5 .	3/16" Nut Plate	K-1000-3	2
6 .	AFT Jury Strut - Sport Wing *	KPJS0011	2
7 .	3/16" Bolt	AN3-6A	4
8 .	Jury Strut Connect Tube - Sport Wing	KPJS0016	2
9 .	3/16" Bolt	AN3H-4A	4
10 .	Safety Wire	-----	0
11 .	Plastic Shim *	KPAC0121	8
12 .	3/32" Aluminum Rivet	40APR1/8	4
13 .	1/4" Eyebolt	AN43B-15A	2
14 .	1/4" Eyebolt	AN43B-14A	2
15 .	1/4" Thin Washer	AN960-416L	2
16 .	1/4" Thick Washer	AN960-416	2
17 .	1/4" Tensile Nut	AN365-428A	4

*Builder must modify, refer to text for instructions.

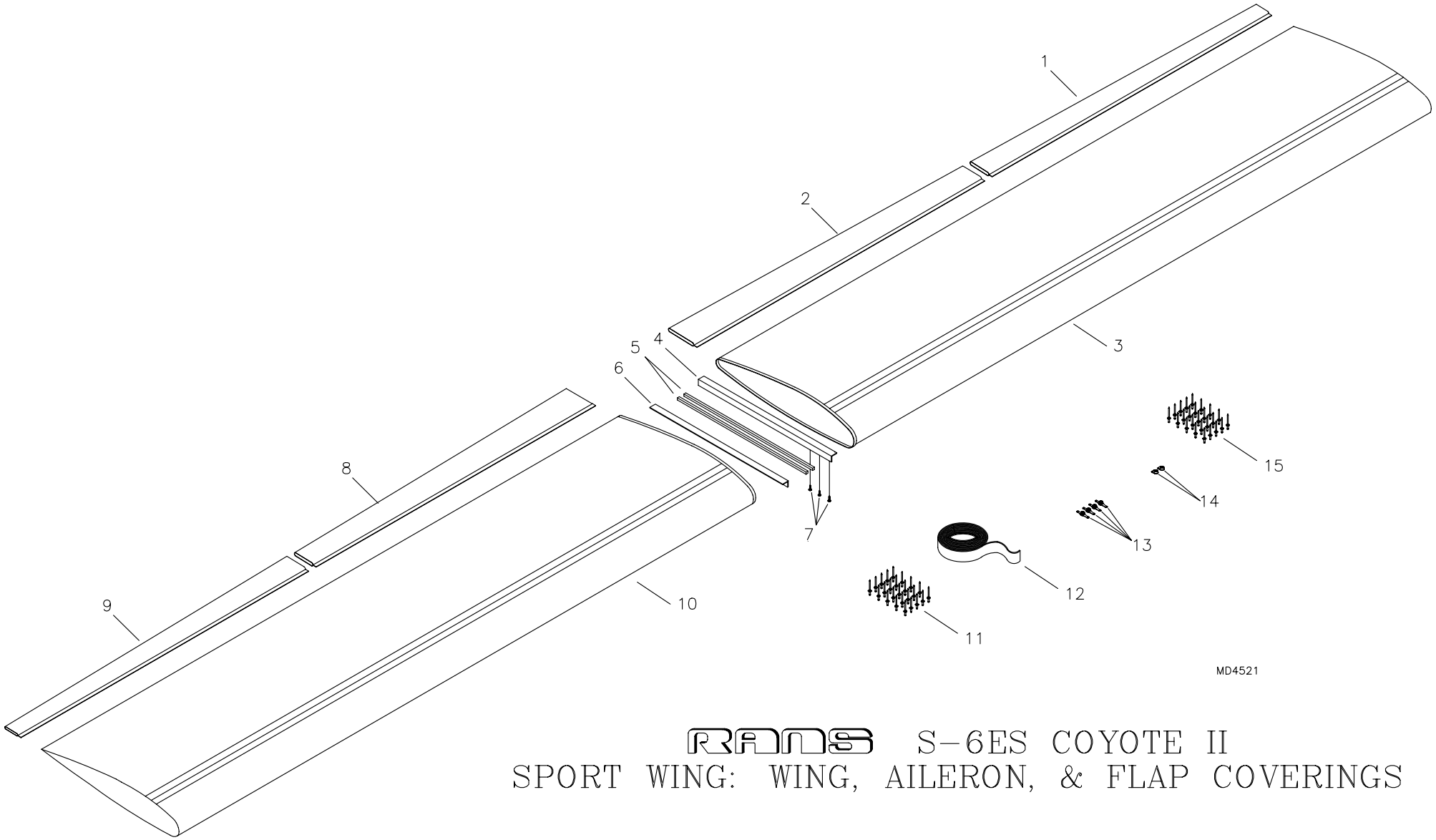

RANS S-6ES COYOTE II

SPORT WING: WING, AILERON, & FLAP COVERINGS

S-6ES COYOTE II - SPORT WING: WING, AILERON & FLAP COVERINGS

#	DESCRIPTION	PART NUMBER	QUANTITY
1.	Aileron Skin, LH	KPCV0042-L	1
2.	Flap Skin, LH	KPCV0043-L	1
3.	Left Wing Cover	KPCV0041-L	1
4.	Bottom Wing Root Seal, LH	WC-BWRS-LH	1
5.	Foam Rubber Strip, 3/8" x 3/16"	WS-FS	1 rls
6.	Bottom Wing Root Seal, RH	WC-BWRS-RH	1
7.	#6 Small Pan Head Screw	6RX1/2 PHS	20
8.	Flap Skin, RH	KPCV0043-R	1
9.	Aileron Skin, RH	KPCV0042-R	1
10.	Right Wing Cover	KPCV0041-R	1
11.	Aluminum Fabric Rivet	ABL4-2AV	540
12.	Anti-Chafe Tape *	-----	0
13.	3/16" Nut Plate	K-1000-3	4
14.	Side-by-Side Nut Plate	MS21086-L3	2
15.	3/32" Aluminum Rivet	40APR1/8	12

PLEASE NOTE: Tail Skins shown with frames.
*Builder provided.

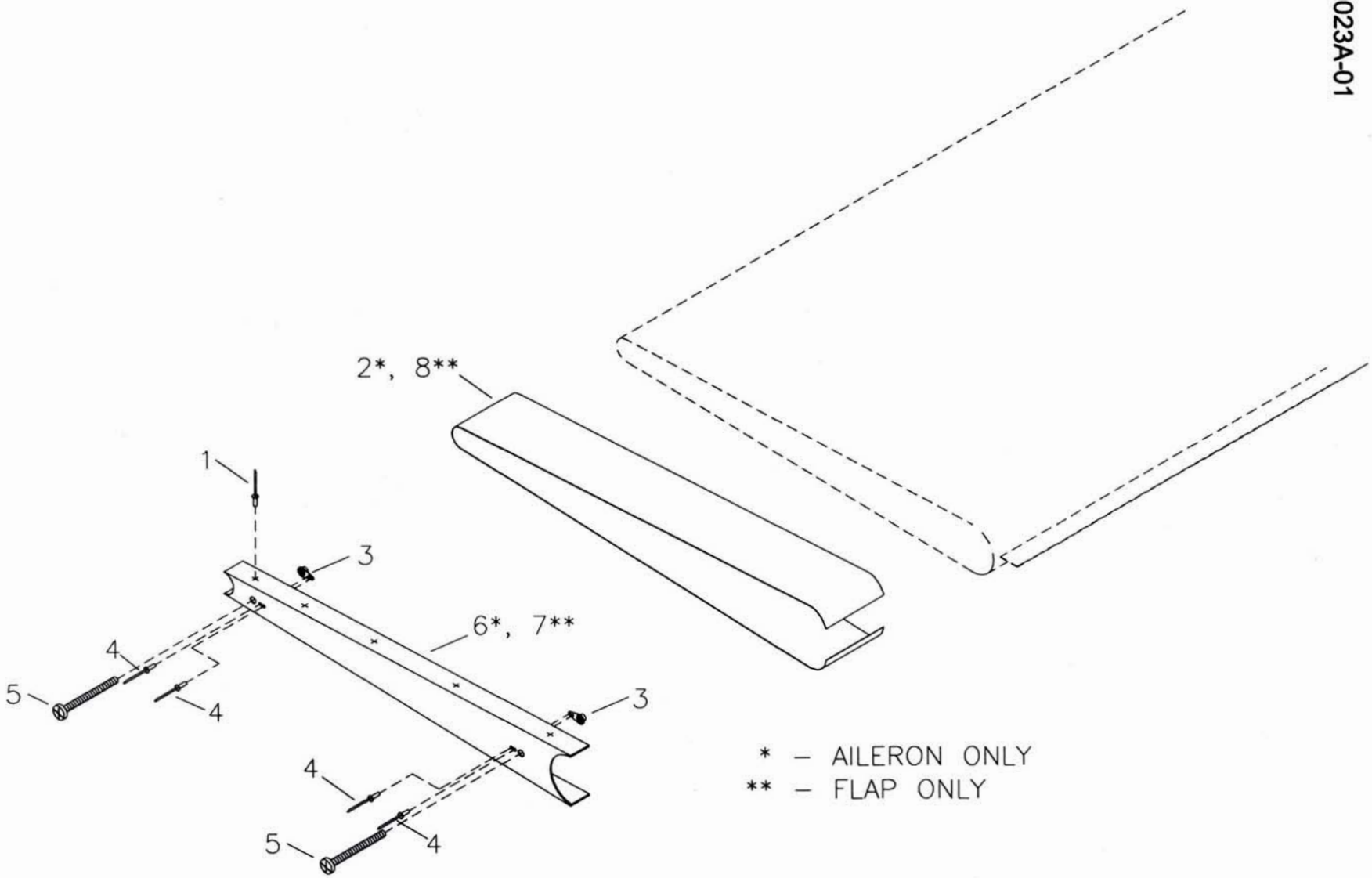

MD4523

RANS S-6ES COYOTE II
SPORT WING: AILERON AND FLAP TENSION RIB

S-6ES COYOTE II - SPORT WING: AILERON AND FLAP TENSION RIB

#	DESCRIPTION	PART NUMBER	QUANTITY
1.	1/8" Aluminum Pop Rivet - Cherry Q	AAPQ-42	40
2.	Aileron Tension Strip	KPFL0031	2
3.	3/16" Single Ear Nut Plate	MS21051-L3	8
4.	3/32" Aluminum Pop Rivet	40APR1/8	16
5.	Aileron Flap Tension Bolt	10/32 X 2 1/2SSPAN	8
6.	Aileron Tension Rib	KPAL0082	2
7.	Flap Tension Rib	KPFL0109	2
8.	Flap Tension Strip	KPFL0122	2

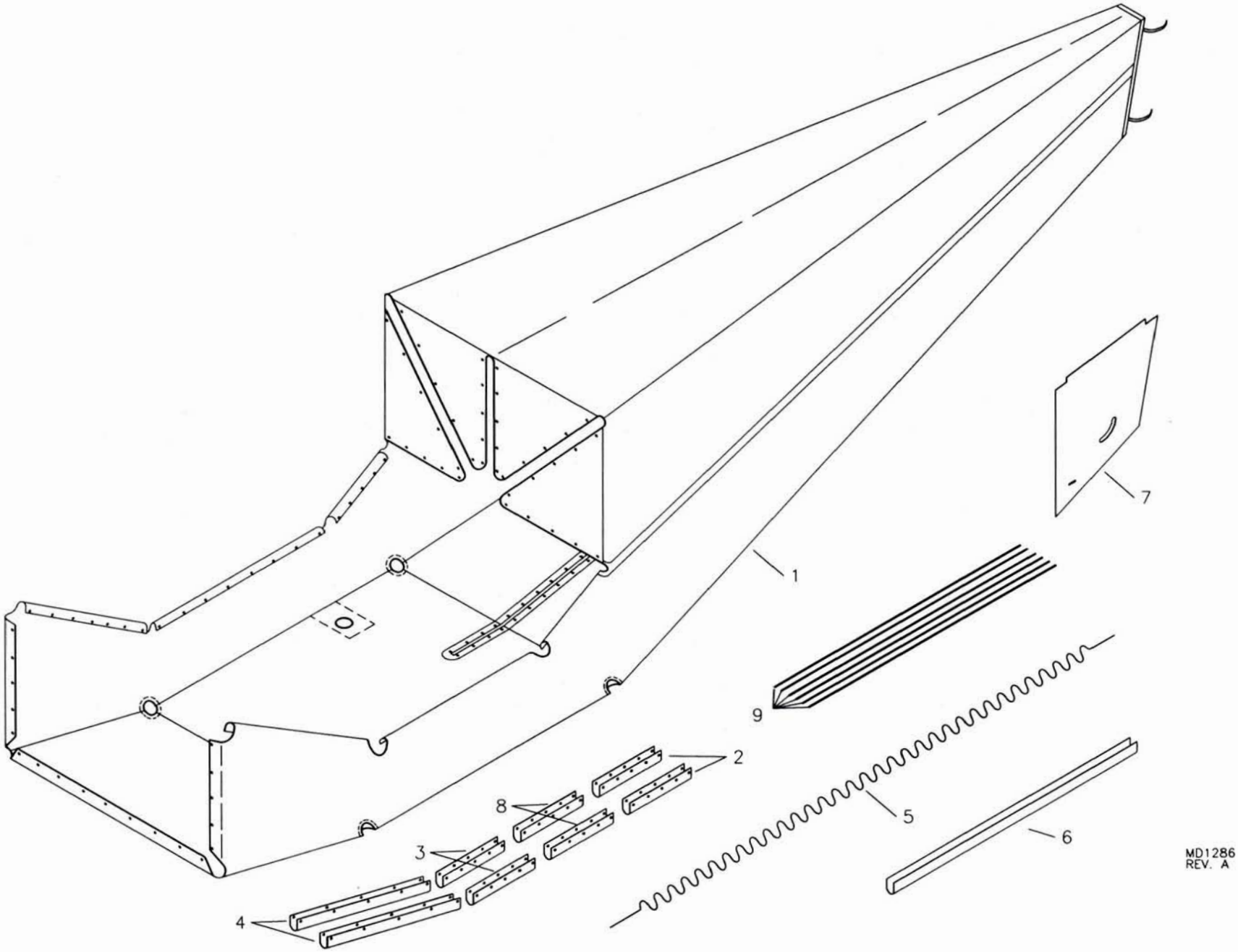

RANS S-6ES COYOTE II
FUSELAGE COVER

S-6ES COYOTE II - FUSELAGE COVER

#	DESCRIPTION	PART NUMBER	QUANTITY
1.	Fuselage Cover	FC-FC	1
2.	13" Lace Up Strip	FC-13LS	2
3.	8" Lace Up Strip	FS-8LS	2
4.	7" Lace Up Strip	FS-7LS	4
5.	Lace Up Cord	CORD-185	185 ft
6.	Wire Harness Cover	FC-WHC	1
7.	Cut Out Template *	FC-TP	1
8.	10" Lace Up Strip	FC-10LS	2
9.	1/16" Lacing Wires, (stick) 36" x 1/16"	TG-LW-1/16	6

*Supplied in the text portion of the manual.

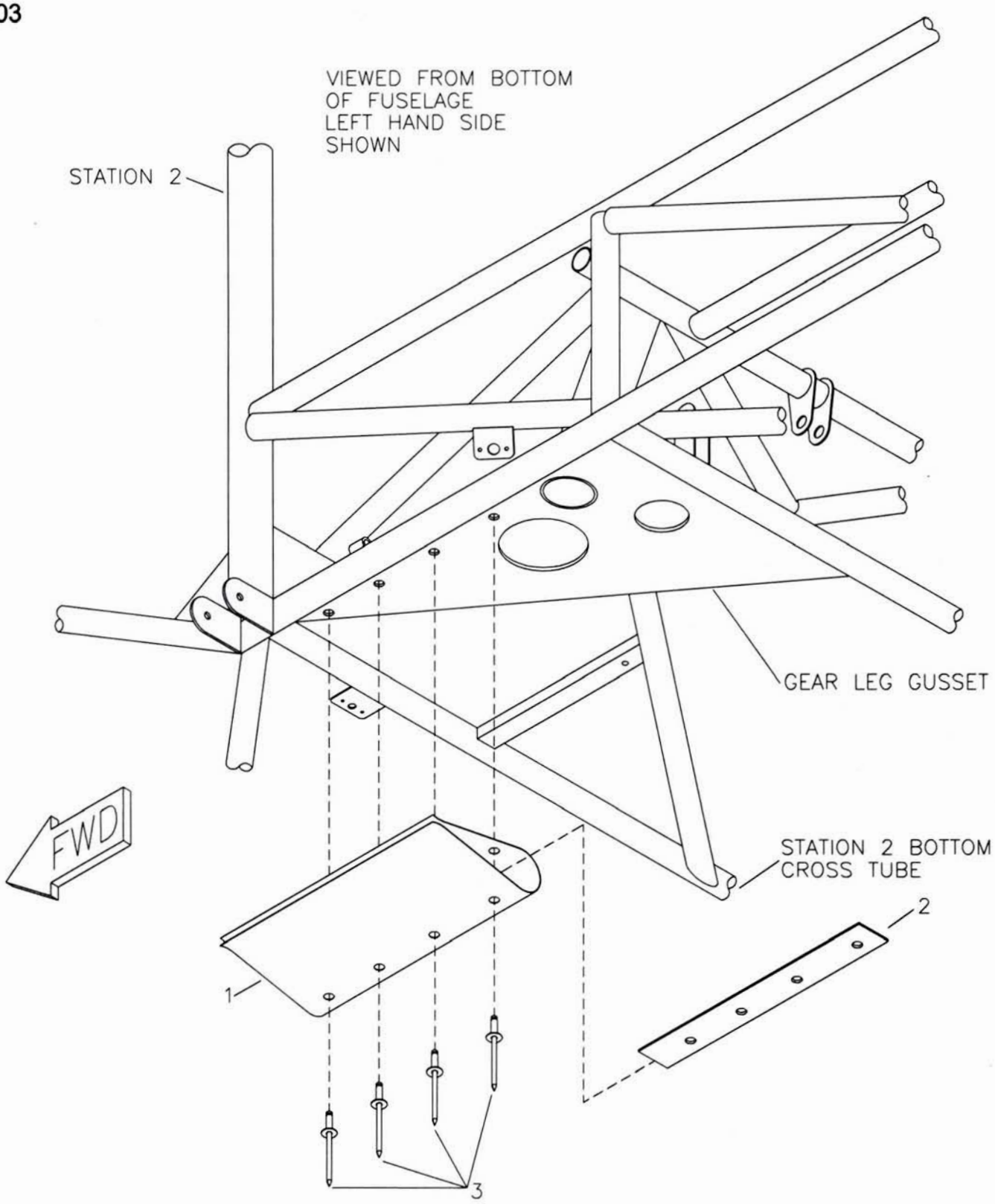

MD3208

RANS S-6ES COYOTE II -STATION 2 LACE UP STRIP (TAILDRAGGERS ONLY)

S-6ES COYOTE II - STATION 2 - LACE UP STRIP (TAILDRAGGER ONLY)

#	DESCRIPTION	PART NUMBER	QUANTITY
1.	8" Lace Up Strip *	FS-8LS	0
2.	Aluminum Strip, 1/2" x .032 x 7" **	KAAC0005-8	0
3.	1/8" Stainless Steel Pop Rivet - Cherry Q	CCPQ-42	8

*Referenced from fuselage cover.
**Builder must fabricate from raw stock.

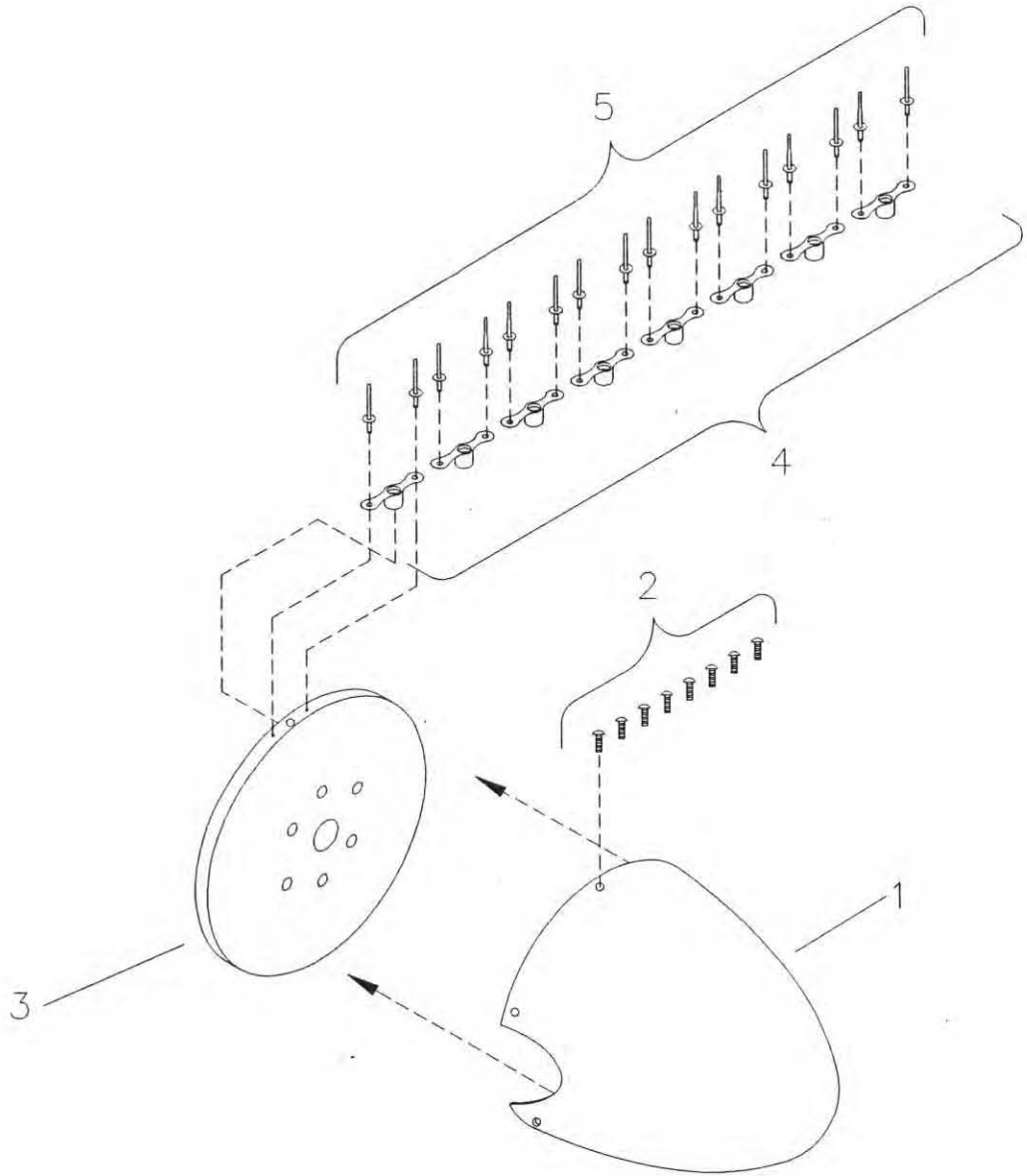

MD236

RANS S-6ES/S-6XL COYOTE II
9" SPINNER

S-6ES COYOTE II - OPTIONAL 9" SPINNER

#	DESCRIPTION	PART NUMBER	QUANTITY
1.	Spinner Dome, 9"	SPIN-9	1
2.	Pan Head Phillips Bolt (5/8" long)	KSHW0071	8
3.	Spinner Backing Plate, 9"	SPIN-BC9-503/582	1
3.	Spinner Backing Plate, 9"	SPIN-BC9-912	1
4.	3/16" Nut Plate	K-1000-3	8
5.	3/32" Aluminum Pop Rivet	40APR1/4	16

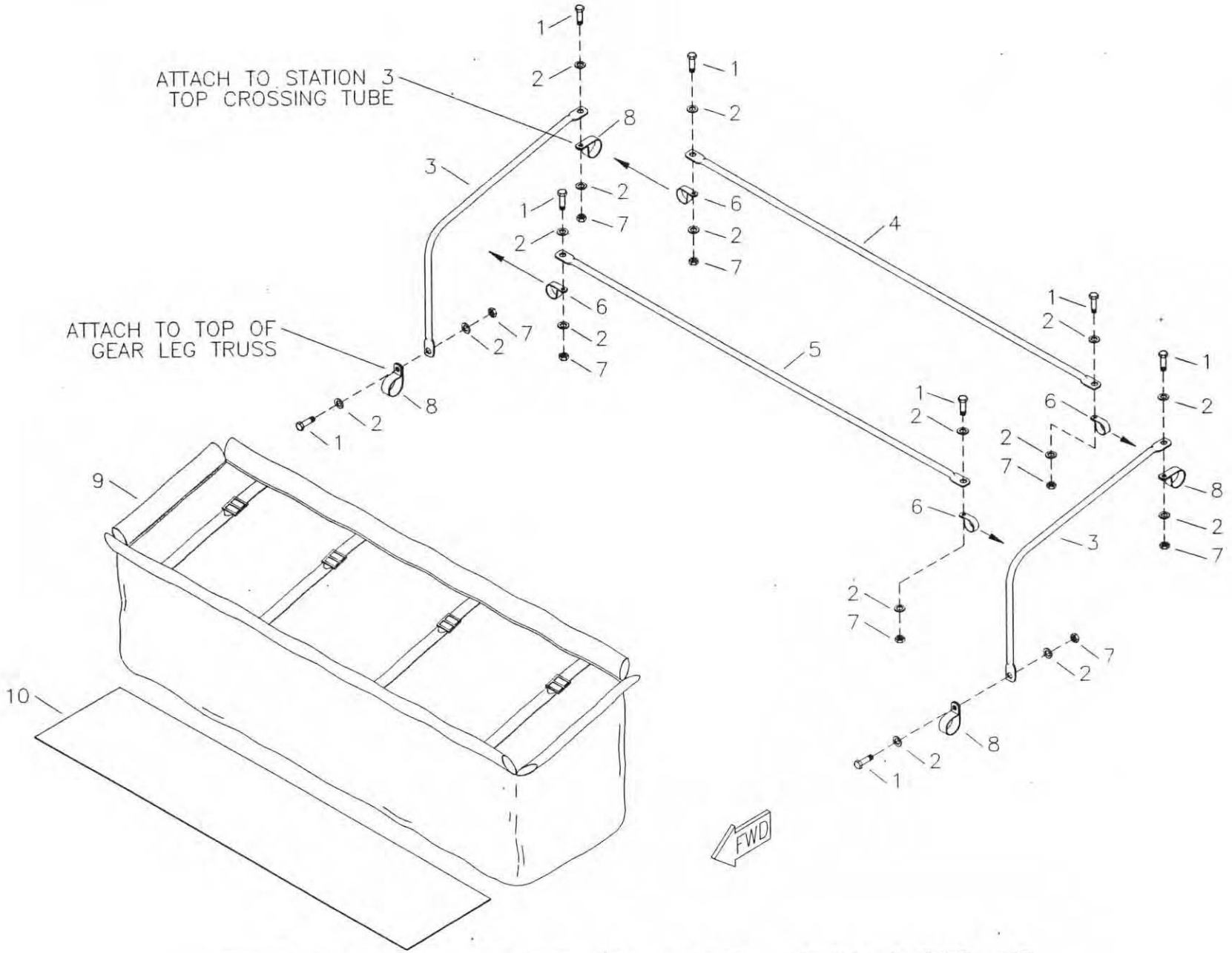

RANS S-6ES/S-6XL COYOTE II
BAGGAGE COMPARTMENT

MD1287

S-6ES COYOTE II BAGGAGE COMPARTMENT

#	DESCRIPTION	PART NUMBER	QUANTITY
1.	3/16" Bolt	AN3-5A	8
2.	3/16" Thick Washer	AN960-10	16
3.	Side Brace	BAG-SB	2
4.	Top Brace	BAG-TB	1
5.	Bottom Brace	BAG-BB	1
6.	1/2" Cushioned Clamp (+2 TD)	MS21919-DG8	4
7.	3/16" Shear Nut	AN364-1032A	8
8.	5/8" Non Cushioned Clamp (-2 TD)	MS21919-DG10	4
9.	Baggage Compartment	BAG-BAG	1
10.	Baggage Compartment Bottom	BAG-BOT	1

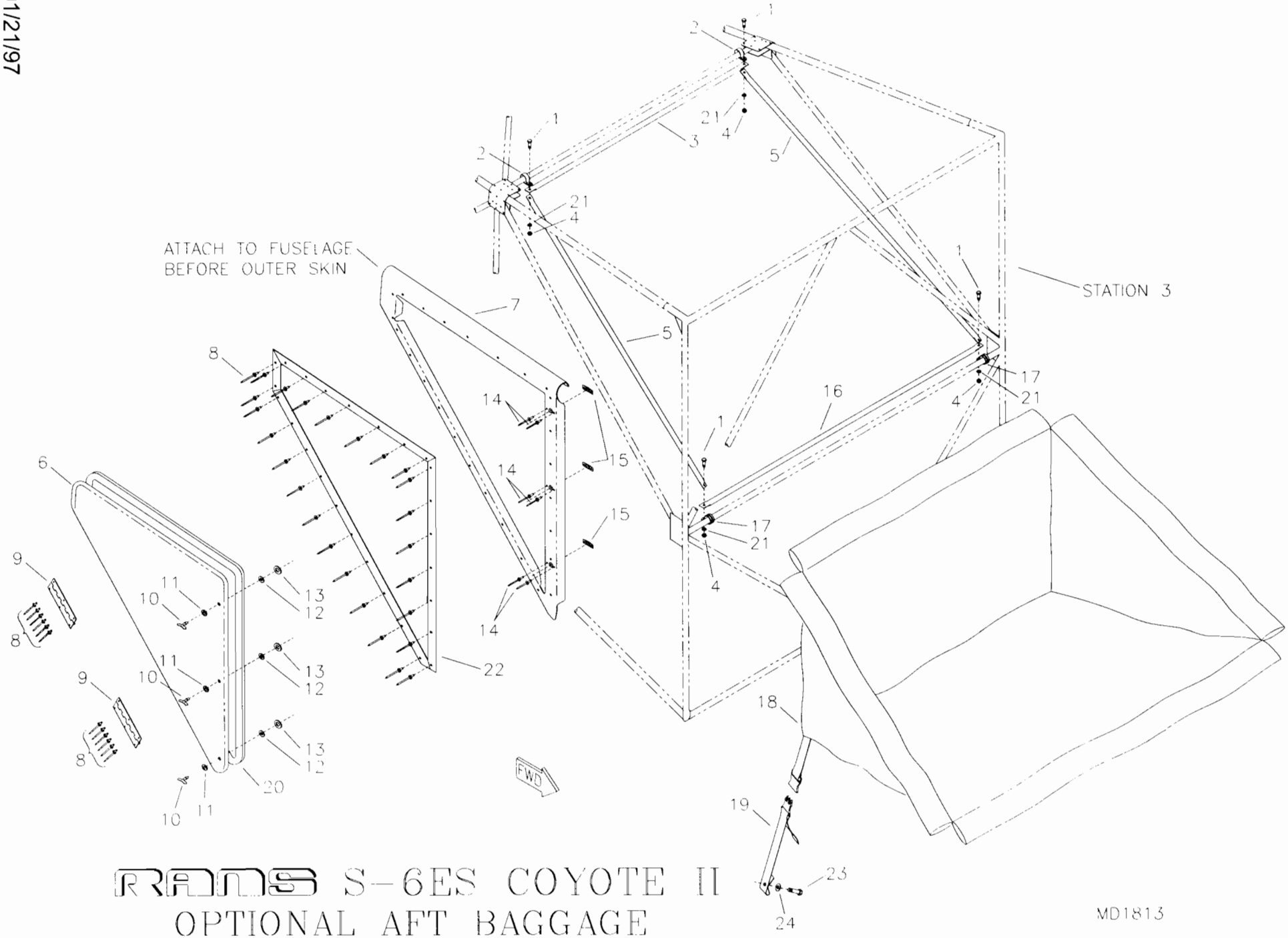

RAMS S-6ES COYOTE II
OPTIONAL AFT BAGGAGE

MD1813

S-6ES COYOTE II - OPTIONAL AFT BAGGAGE

#	DESCRIPTION	PART NUMBER	QUANTITY
1.	3/16" Bolt	AN3-6A	4
2.	3/4" Non-Cushioned Clamp	AN742-D12	2
3.	Baggage Frame Top Tube	KPFU0002	1
4.	3/16" Shear Nut	AN364-1032A	4
5.	Baggage Frame Side Tube	KPFU0003	2
6.	AFT Baggage Door	KPDR0004	1
7.	AFT Baggage Door Frame	KPDR0003	1
8.	1/8" Aluminum Pop Rivet - Cherry Q	AAPQ-42	40
9.	Piano Hinge *	BD-HINGE	6 in
10.	Wing Head 1/4 Turn Stud	82-12-160-16	3
11.	Rubber Washer	#201	3
12.	Wear Washer Nylon	#103	3
13.	Snap Ring	#101	3
14.	3/32" Aluminum Pop Rivet	40APR1/4	6
15.	1/4 Turn Receptacle	#302	3
16.	Baggage Frame Bottom Tube	KPFU0004	1
17.	5/8" Cushioned Tube Clamp	MS21919-DG10	2
18.	AFT Baggage Compartment	AFT-BAG	1
19.	Strap ***	AFT-BAG-STRAP	0
20.	Foam Rubber Strip, 3/8" x 3/16"	WS-FS	1 rls
21.	3/16" Thin Washer	AN960-10L	4
22.	Retainer Strip **	KPDR0024	8 ft
23.	3/16" Bolt	AN3-5A	2
24.	3/16" Large Washer	AN970-3	2

*Builder cuts into 2 equal lengths.
**Builder cuts and miters to fit.
***Supplied with Bag.

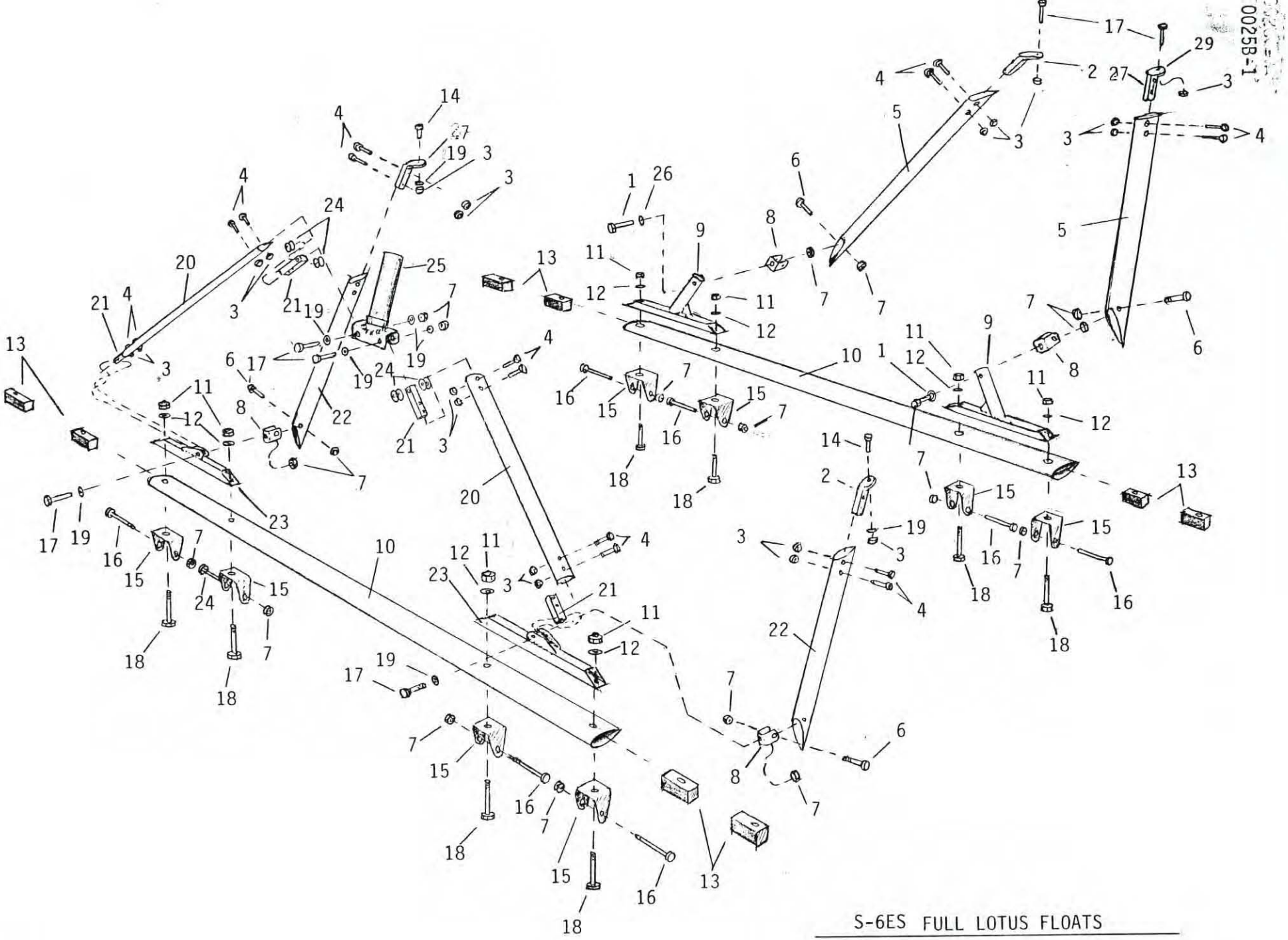

S-6ES FULL LOTUS FLOATS

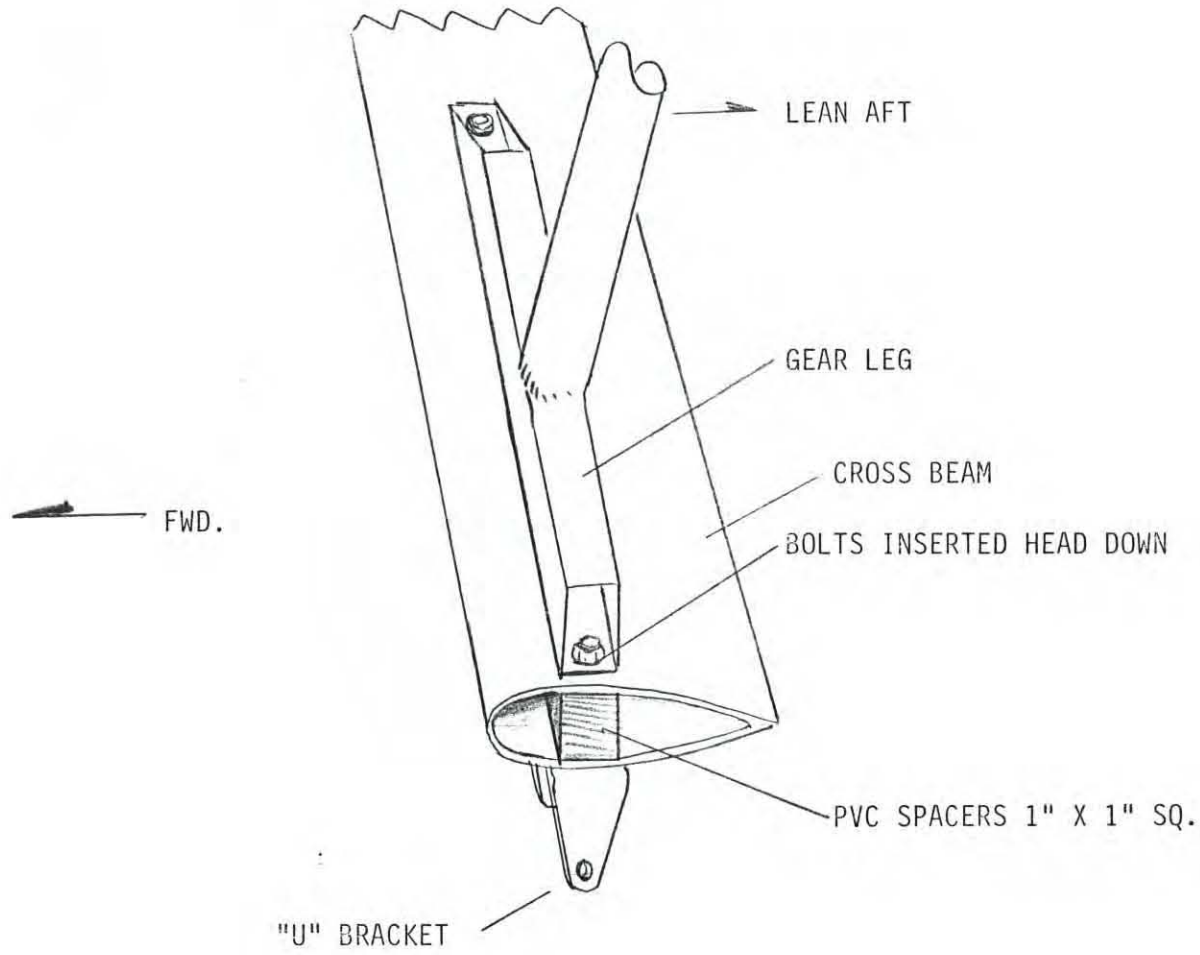

S-6ES FULL LOTUS FLOATS

S-6ES COYOTE II - FULL LOTUS FLOAT KIT

#	DESCRIPTION	PART NUMBER	QUANTITY
1 .	1/4" Bolt	AN4-17A	2
2 .	Upper AFT Fitting, RH	FLT-UAF-R	2
3 .	3/16" Shear Nut	AN364-1032A	16
4 .	3/16" Bolt	AN3-12A	16
5 .	AFT Side Brace	FLT-ASB(6)	2
6 .	1/4" Bolt	AN4-15A	4
7 .	1/4" Shear Nut	AN364-428A	16
8 .	Horizontal Stabilizer Attach Bracket	S2-SAB	4
9 .	Main Gear Attach	FLT-MGA	2
10 .	Cross Beam	FLT-CB(6)	2
11 .	5/16" Tensile Nut	AN365-524A	8
12 .	5/16" Thick Washer	AN960-516	8
13 .	1" X 1" PVC Block	FLT-1X1PVC	8
14 .	3/16" Bolt	AN3-5A	2
15 .	"U" Bracket, 1 5/8"	SU-158	8
16 .	1/4" Bolt	AN4-24A	8
17 .	1/4" Bolt	AN4-15A	6
18 .	5/16" Bolt	AN5-20A	8
19 .	3/16" Thick Washer	AN960-10	8
20 .	Forward A Beam Brace	FLT-FABB(6)	2
21 .	Forward Brace End Fitting	FLT-ENDFT	4
22 .	Forward Side Brace	FLT-FSB(6)	2
23 .	Forward Cross Beam Attach Fitting	FLT-FCBAF	2
24 .	1/4" Plastic Washer	PW-4	8
25 .	Nose Gear Mount	FLT-NGMT	1
26 .	1/4" Thin Washer	AN960-416L	2
27 .	Upper AFT Fitting LH	FLT-UAF-L	2

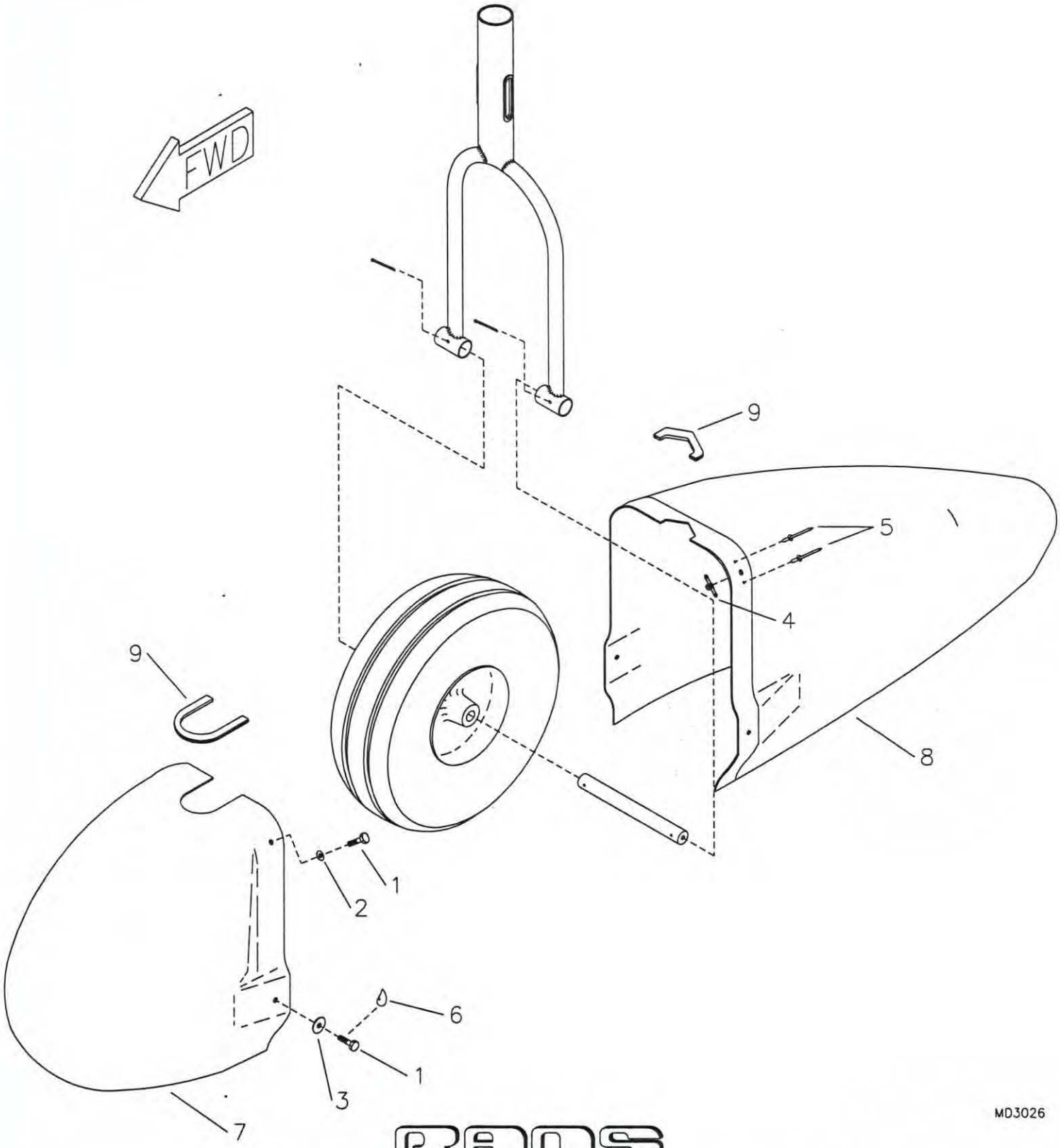

RANS

S-6ES COYOTE II OPTIONAL NOSE WHEEL PANT ASSEMBLY

S-6ES COYOTE II NOSE WHEEL PANT

#	DESCRIPTION	PART NUMBER	QUANTITY
1.	3/16" Bolt	AN3-5A	4
2.	3/16" Thick Washer	AN960-10	2
3.	3/16" Large Wood Washer	AN970-3	2
4.	3/16" Nut Plate	K-1000-3	2
5.	3/32" Aluminum Pop Rivet	40APR1/8	4
6.	Loctite Blue	LOC-TITE	0
7.	Nose Wheel Pant, FWD	NWP-FWD	1
8.	Nose Wheel Pant, AFT	NWP-AFT	1
9.	Rubber Trim	X1011	8 in

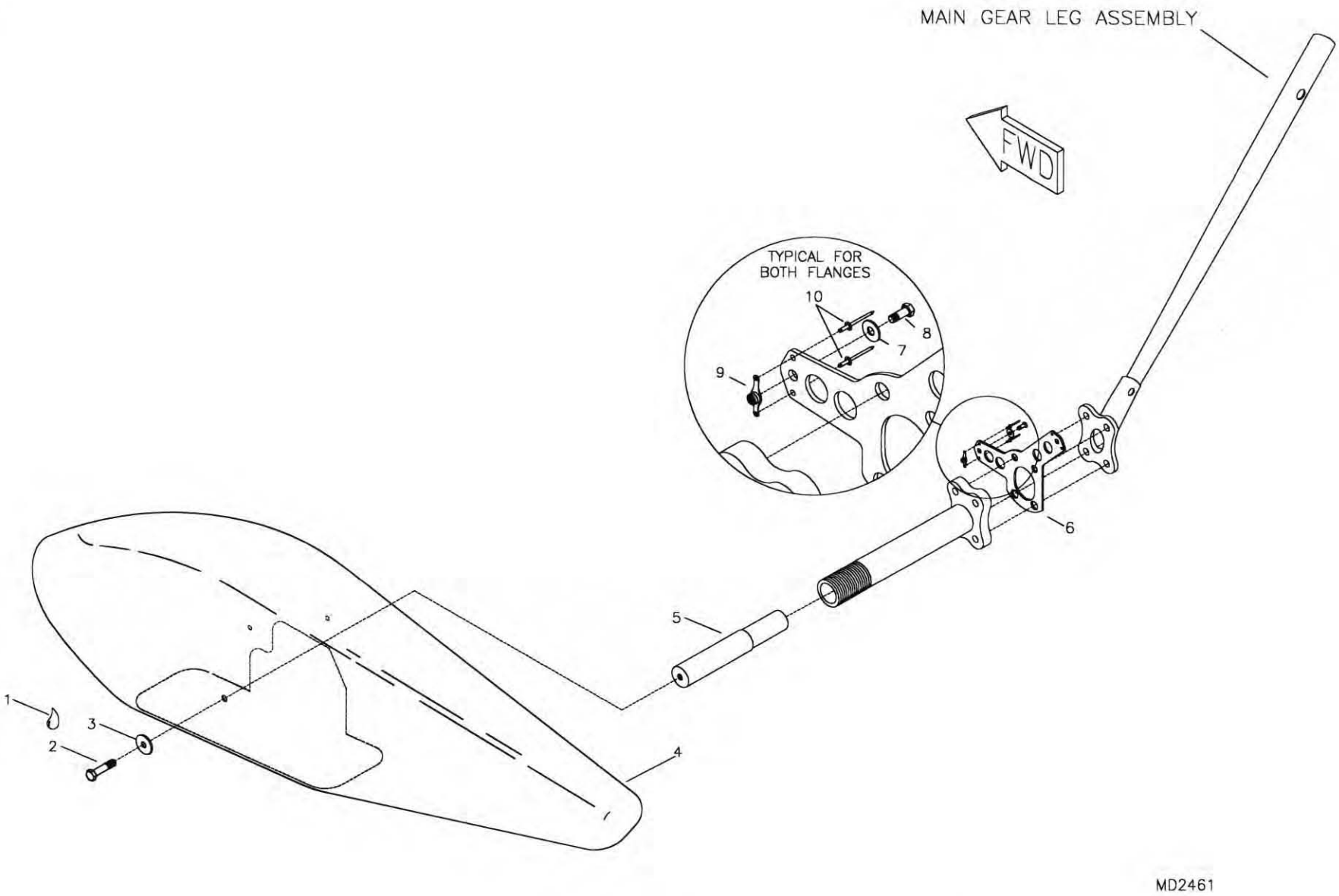

RANS S-6ES COYOTE II
OPTIONAL MAIN WHEEL PANT ASSEMBLY

S-6ES COYOTE II - OPTIONAL MAIN WHEEL PANTS FOR STD 6" HYDRAULIC BRAKES

#	DESCRIPTION	PART NUMBER	QUANTITY
1.	Loctite Blue	LOC-TITE	0
2.	1/4" Bolt	AN4-4A	2
3.	1/4" Large Washer	AN970-4	2
4.	Main Wheel Pant - 6"	KPMG0105	2
5.	Wheel Axle Extender - 6"	KPMG0171	2
6.	Wheel Pant Mount Plate	KPMG0162	2
7.	3/16" Thick Washer	AN960-10	4
8.	3/16" Bolt	AN3-3A	4
9.	3/16" Nut Plate	K-1000-3	4
10.	3/32" Aluminum Pop Rivet	40APR1/4	8

S-6ES COYOTE II

This section intentionally left blank.

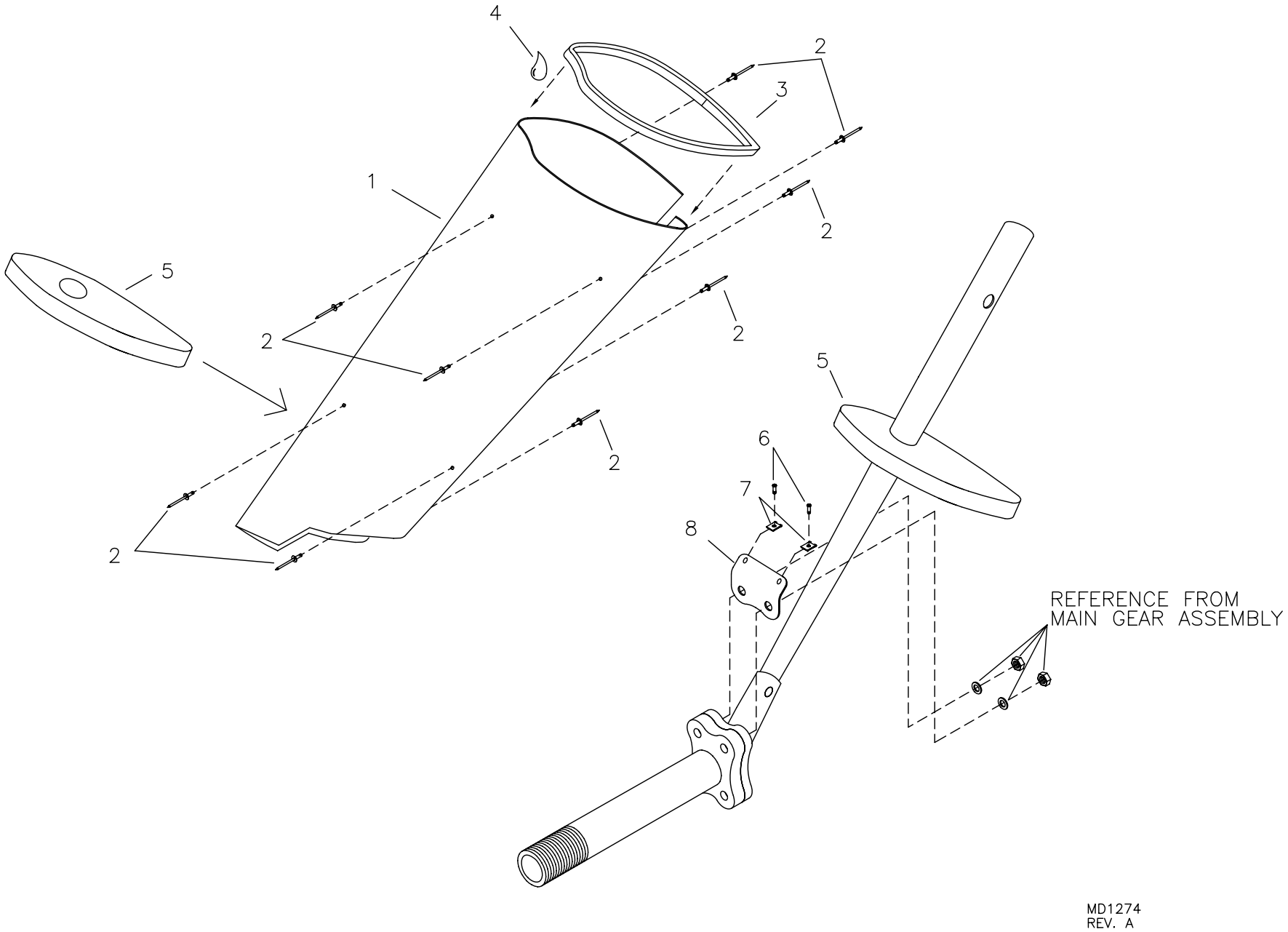

RANS S-6ES COYOTE II
OPTIONAL MAIN GEAR LEG FAIRINGS

S-6ES COYOTE II - OPTIONAL MAIN GEAR LEG FAIRINGS

#	DESCRIPTION	PART NUMBER	QUANTITY
1.	Gear Leg Fairing - LH (Taildragger)	KPMG0147-L	1
1.	Gear Leg Fairing - RH (Taildragger)	KPMG0147-R	1
1.	Gear Leg Fairing - LH (Trike)	KPMG0152-L	1
1.	Gear Leg Fairing - RH (Trike)	KPMG0152-R	1
2.	3/32" Aluminum Pop Rivet	40APR1/8	30
3.	Rubber Trim	X1011	3 ft
4.	Adhesive - Super Glue *	-----	0
5.	Fairing Rib - Main Gear (Taildragger)	KPMG0126	2
5.	Fairing Rib - Main Gear (Trike)	KPMG0091	4
6.	#8 Pan Head Screw	8X1/2 PHS	4
7.	Tinnerman	A1789-8Z-1	4
8.	Main Gear Fairing Lower Bracket - LH	KPMG0127-L	1
8.	Main Gear Fairing Lower Bracket - RH	KPMG0127-R	1

*Builder supplied.

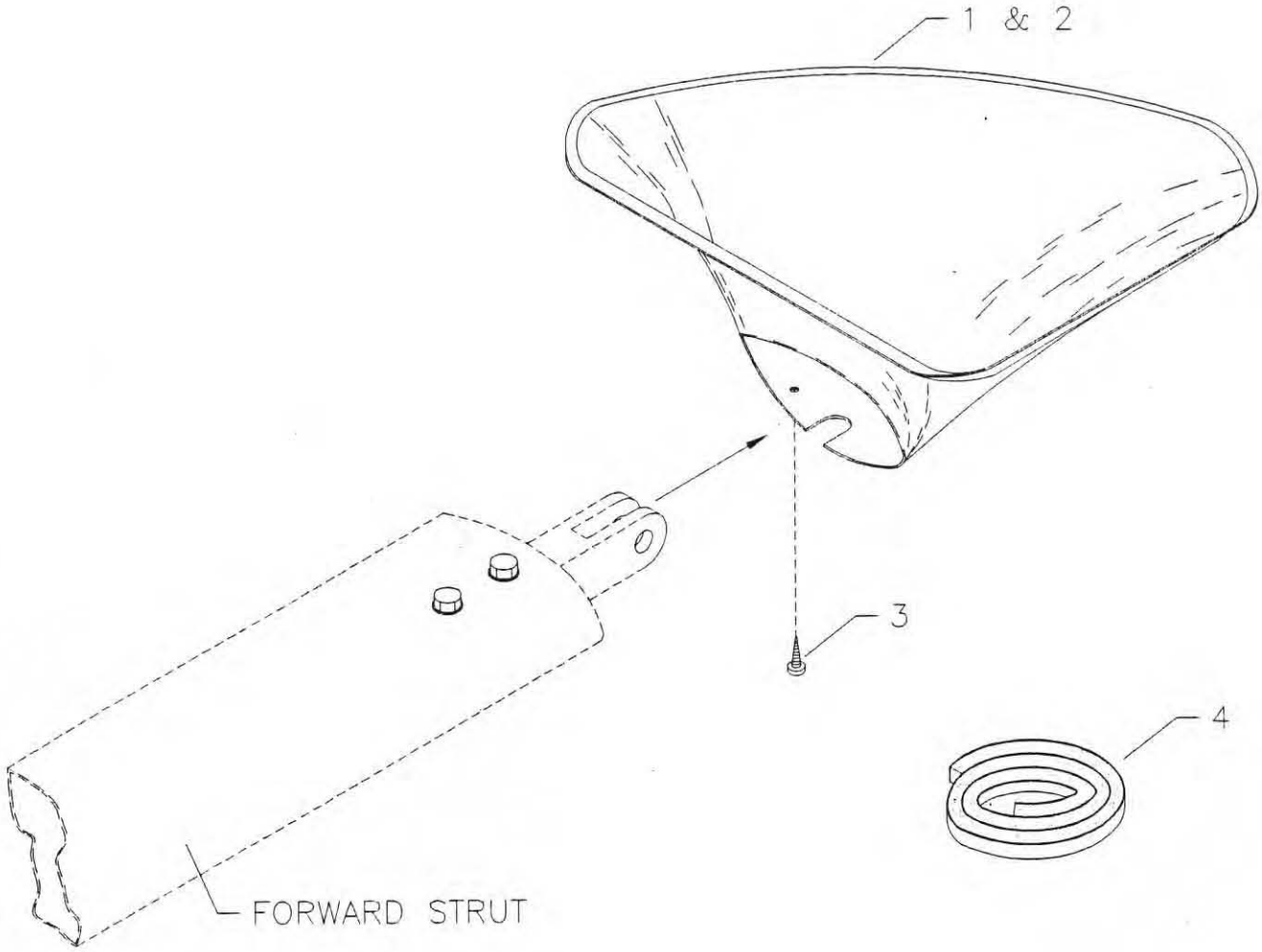

NOTE: LEFT SIDE SHOWN

MD314

RANS S-6ES/S-6S/S-6XL COYOTE II FORWARD STRUT FILLET FAIRING

12/2/92

S-6ES COYOTE II - FILLET FAIRING

#	DESCRIPTION	PART NUMBER	QUANTITY
1.	Forward Strut Fairing, RH	W-FSFF-RH	1
2.	Forward Strut Fairing, LH	W-FSFF-LH	1
3.	#6 Small Pan Head Screw	6RX1/2 PHS	2
4.	Foam Tape, 1/8" x 1/4" x 40"	1/8-FS	1 rls

0025H-01

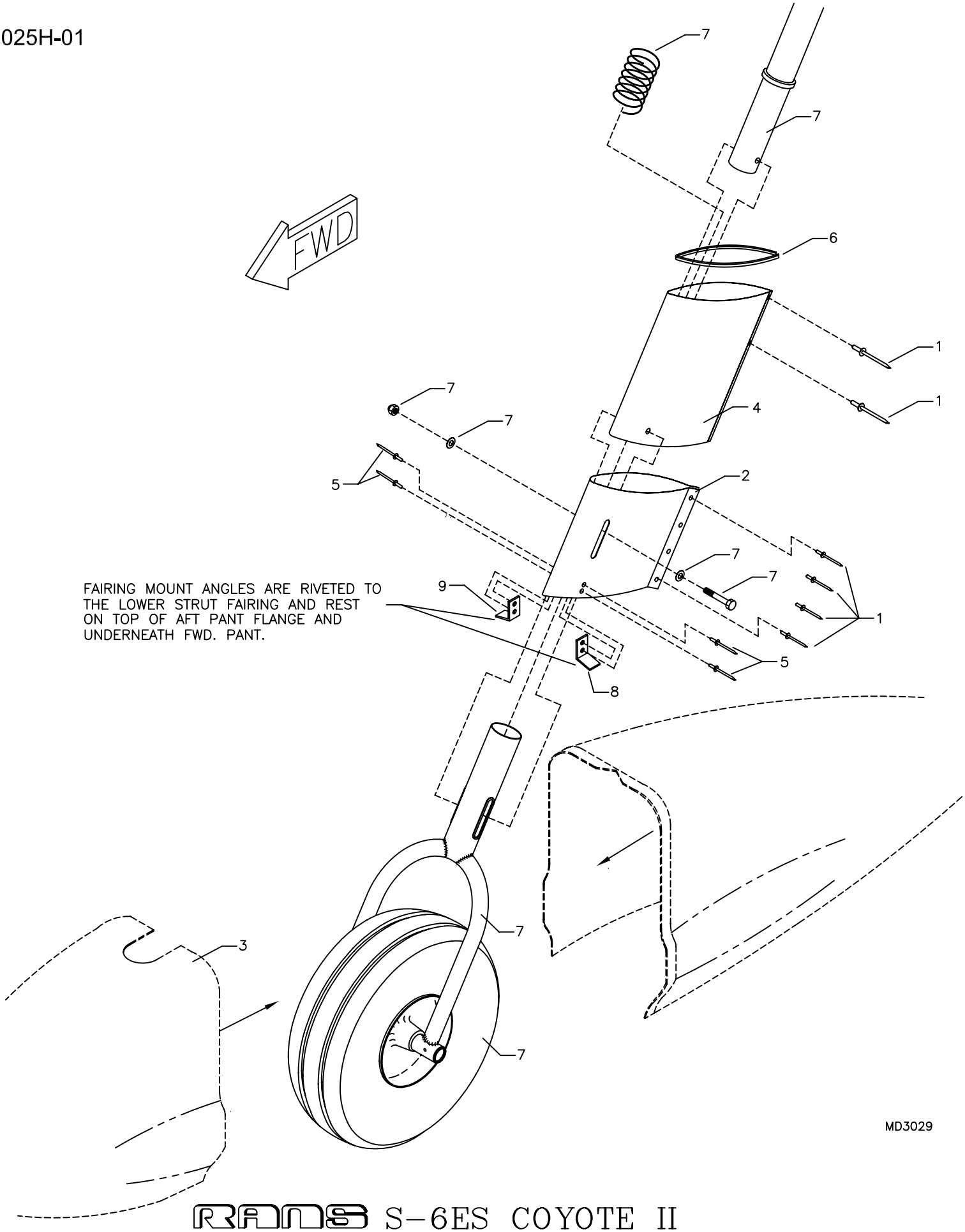

RANS S-6ES COYOTE II
OPTIONAL NOSE WHEEL STRUT FAIRING

10/01/2010

S-6ES COYOTE II - NOSE FAIRING

#	DESCRIPTION	PART NUMBER	QUANTITY
1 .	3/32" Aluminum Pop Rivet	40APR1/8	6
2 .	S-6/S-12 Lower Fairing	LG-LN-FAIR	1
3 .	Nose Wheel Pant *	-----	0
4 .	Upper Fairing	6-LG-UN-FA	1
5 .	1/8" Aluminum Pop Rivet - Cherry Q	AAPQ-42	4
6 .	Small Rubber Edging	8510K11	12 in
7 .	Existing Gear Leg Parts *	-----	0
8 .	Upper Fairing Mount	LG-NFMNT-L	1
9 .	Upper Fairing Mount	LG-NFMNT-R	1

*Reference

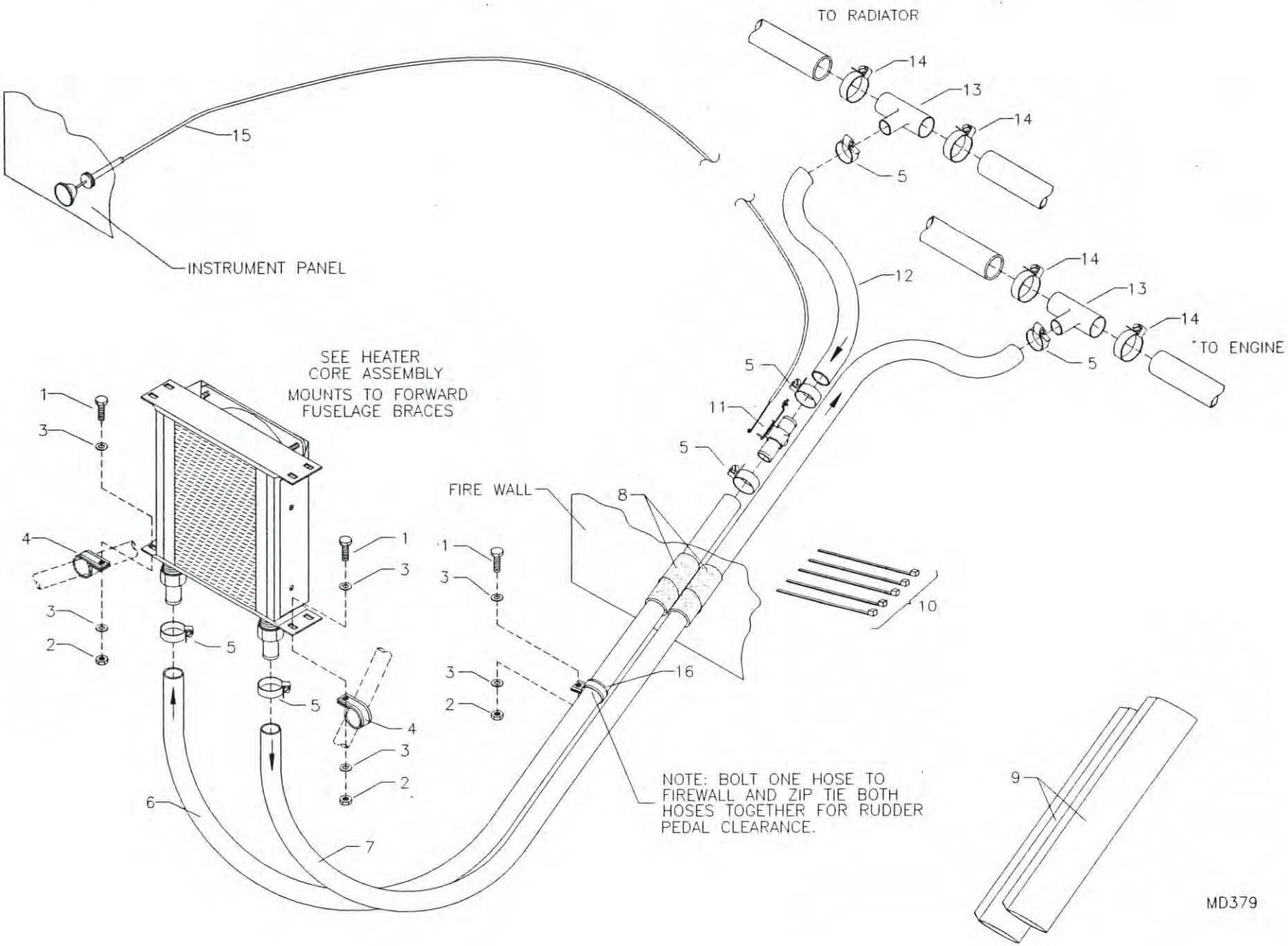

RANS S-6ES/S-6S/S-6XL COYOTE II
HEATER SYSTEM

S-6ES COYOTE II - HEATER SYSTEM ASSEMBLY

#	DESCRIPTION	PART NUMBER	QUANTITY
1 .	3/16" Bolt	AN3-4A	3
2 .	3/16" Shear Nut	AN364-1032A	3
3 .	3/16" Thin Washer	AN960-10L	6
4 .	1/2" Cushioned Tube Clamp	MS21919-DG8	2
5 .	Hose Clamp, 1"	5-5210	6
6 .	5/8" Heater Hose	HEATER HOSE 5/8	21 in
7 .	5/8" Heater Hose	HEATER HOSE 5/8	24 in
8 .	1" Radiator Hose, 2 @ 4"	RADIATOR HOSE	8 in
9 .	Hose Covers	H-HC	2
10 .	Zip Ties	ZIP TIES	5
11 .	Control Valve	277813	1
12 .	5/8" Heater Hose	HEATER HOSE 5/8	18 in
13 .	1" To 5/8" Tee	H-TEE	2
14 .	Hose Clamp, 1 1/2"	5-5216	4
15 .	Push Pull Choke Cable	4-336	1
16 .	1" Cushioned Tube Clamp	MS21919-DG16	1

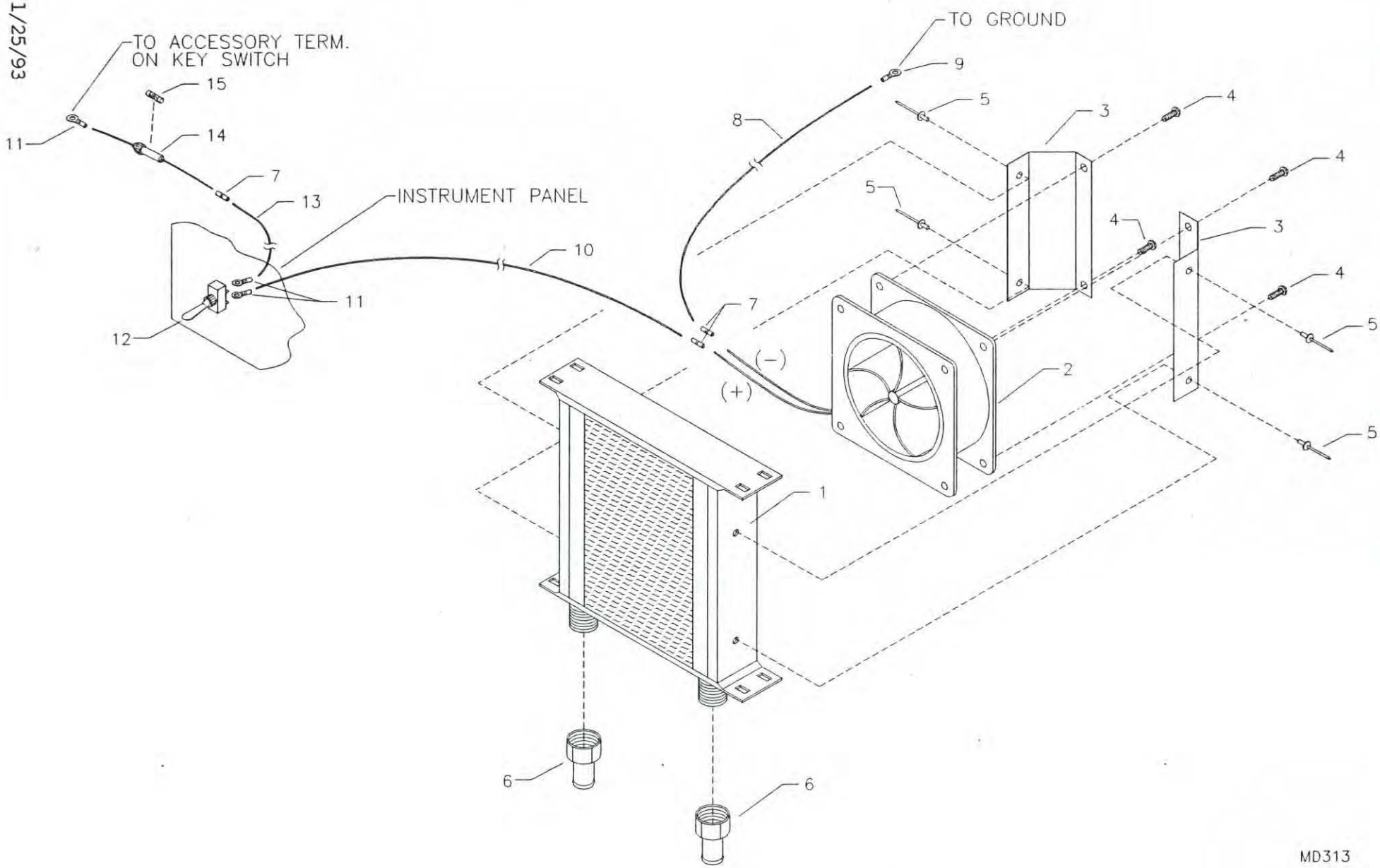

RANS S-6ES/S-6S/S-6XL COYOTE II
HEATER CORE ASSEMBLY

S-6ES COYOTE II - OPTIONAL 912 HEATER CORE ASSEMBLY

#	DESCRIPTION	PART NUMBER	QUANTITY
1 .	Heater Core	21608	1
2 .	Fan	032207	1
3 .	Fan Mounting Plate	H-HFMP	2
4 .	3/16" Truss Head Bolt	AN526-C1032R12	4
5 .	1/8" Aluminum Rivet - Cherry Q	AAPQ-42	4
6 .	5/8" Nipple	80146	2
7 .	14 Gauge Splice, Butt Connector *	-----	0
8 .	14 Gauge Black Wire *	-----	0
9 .	14 Gauge Eye Terminal, Blue 1/4" *	-----	0
10 .	14 Gauge Red Wire *	-----	0
11 .	14 Gauge Eye Terminal, Blue 3/16" *	-----	0
12 .	Switch *	-----	0
13 .	14 Gauge Red Wire *	-----	0
14 .	14 Gauge, Fuse Holder *	-----	0
15 .	10 AMP Fuse *	-----	0

* Builder Supplied

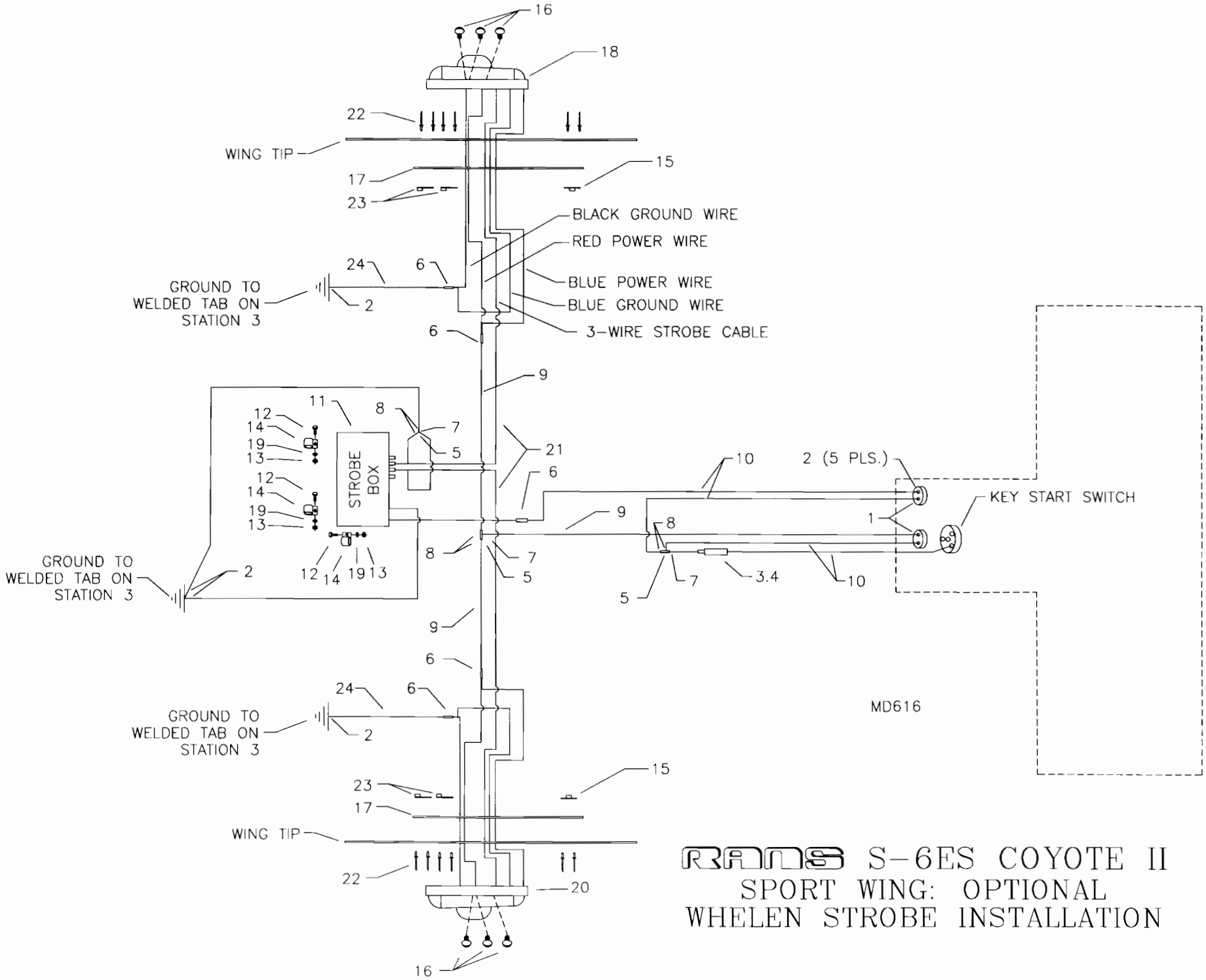

RANS S-6ES COYOTE II
SPORT WING: OPTIONAL
WHELEN STROBE INSTALLATION

S-6ES COYOTE II - SPORT WING: OPTIONAL WHELEN STROBES

#	DESCRIPTION	PART NUMBER	QUANTITY
1.	Ignition Switch	MS35058-22	2
2.	14 Gauge Eye Terminal, Blue 3/16"	IP-7102	9
3.	15 AMP Fuse	KSES0020-15	1
4.	14 Gauge, In Line Fuse Holder	KSES0019	1
5.	Terminal Y Connector, Brass	IP-YC	3
6.	14 Gauge Splice, Butt Connector	IP-7132	5
7.	14 Gauge Male Spade Terminal, Blue	IP-7126	3
8.	14 Gauge Female Spade Terminal, Blue	IP-7128	6
9.	14 Gauge Yellow Wire	14 GA WIRE/YELLOW	50 ft
10.	14 Gauge Red Wire	14 GA WIRE/RED	8 ft
11.	Whelen Strobe Light Power Supply	A413A, HDA-DF	1
12.	3/16" Bolt	AN3-4A	3
13.	3/16" Shear Nut	AN364-1032A	3
14.	1/2" Cushioned Clamp	MS21919-DG8	3
15.	8-32 Nut Plate	MS21047-08	2
16.	8/32" Truss Head Bolt	AN515-8R7	6
17.	Navigation Light Mount Plate	KPWI0472	2
18.	Whelen Right Strobe Light	A600-PG	1
19.	3/16" Thin Washer	AN960-10L	3
20.	Whelen Left Strobe Light	A600-PR	1
21.	Whelen Installation & Cable	HD-60	1
22.	3/32" Aluminum Pop Rivet	40APR1/4	12
23.	8-32 Single Ear Nut Plate	MS21051-08	4
24.	14 Gauge Black Wire	14 GA WIRE/BLACK	40 ft

S-6ES COYOTE II

This section intentionally left blank.

S-6ES COYOTE II

This section intentionally left blank.

S-6ES COYOTE II

This section intentionally left blank.

07/21/04

0025N-1

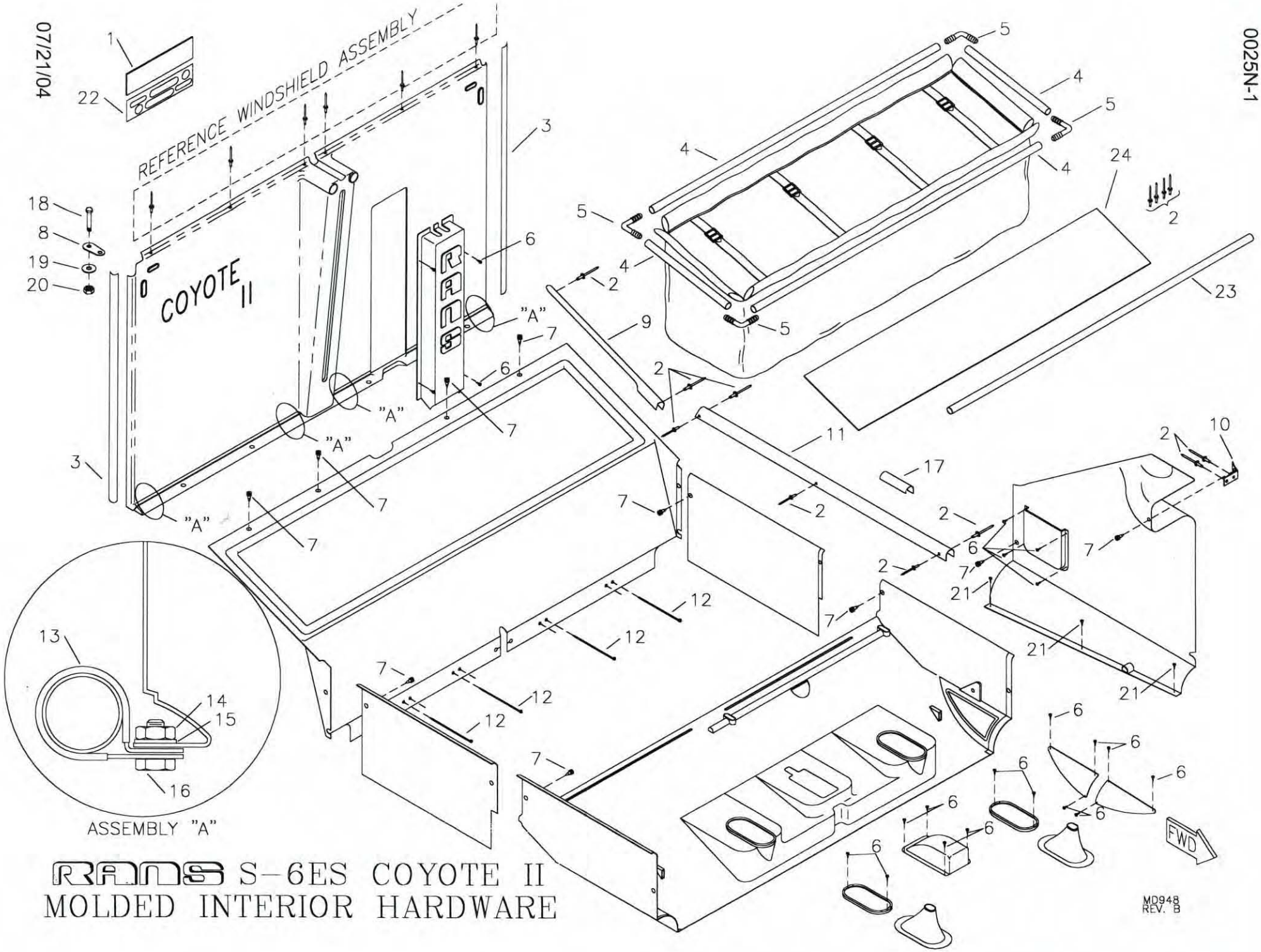

RANS S-6ES COYOTE II
MOLDED INTERIOR HARDWARE

S-6ES COYOTE II - MOLDED INTERIOR HARDWARE

#	DESCRIPTION	PART NUMBER	QUANTITY
1 .	Rubber Strip	RS9805	1 ft
2 .	1/8" Aluminum Pop Rivet - Cherry Q	AAPQ-42	40
3 .	Acrylic Foam Tape ***	-----	0
4 .	Aluminum Tube, 1/2" x .035 x X *	KAAC0009-1	0
5 .	Plastic 90	5002830	4
6 .	#4 Thread Rolling Screw	PPP4-38Z	22
7 .	Screw Rivet	M60-0580-01	12
8 .	Seat Belt Tang Extension	KPIN0020	2
9 .	AFT Capture Strip, R	KPIN0022-R	1
9 .	AFT Capture Strip, L	KPIN0022-L	1
10 .	Kick Panel Firewall Retainer	KPIN0019	2
11 .	Interior - FWD Capture Strip, R	KPIN0021-R	1
11 .	Interior - FWD Capture Strip, L	KPIN0021-L	1
12 .	Long Zip Ties	LONG ZIP TIES	4
13 .	5/8" Cushioned Tube Clamp	MS21919WDG10	4
14 .	3/16" Shear Nut	AN364-1032A	4
15 .	3/16" Plastic Washer	PW-3	4
16 .	3/16" Bolt	AN3-4A	4
17 .	Capture Strip Retainer **	KPIN0026	1
18 .	1/4" Bolt	AN4-5A	2
19 .	1/4" Thick Washer	AN960-416	2
20 .	1/4" Shear Nut	AN364-428A	2
21 .	#4 Small Pan Head Screw	4X1/4 PHS	6
22 .	Interior Template	INT-TEMP	1
23 .	Interior Raw Stock Kit	KAAC0009	1
24 .	Baggage Compartment - Bottom	BAG-BOT	1

*Builder must fabricate from raw stock.
**Builder must modify. Refer to text for instructions.
*** Builder Supplied

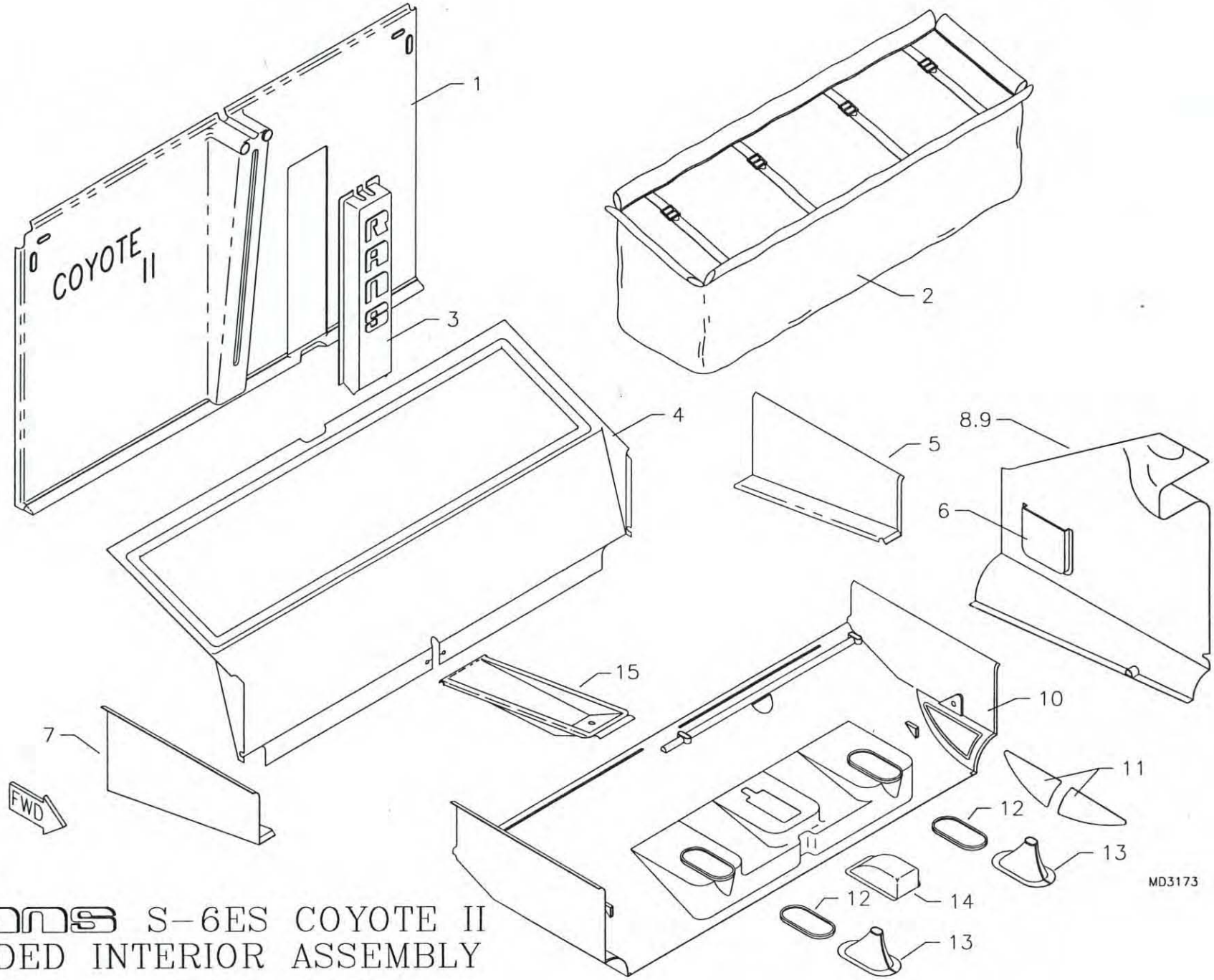

RANS S-6ES COYOTE II
MOLDED INTERIOR ASSEMBLY

S-6ES COYOTE II - MOLDED INTERIOR ASSEMBLY

#	DESCRIPTION	PART NUMBER	QUANTITY
1 .	Interior Panel, Back Panel	KPIN0001	1
2 .	Interior Baggage Compartment	KPIN0002	1
3 .	Interior Panel Flap Teleflex Cover	KPIN0003	1
4 .	Interior Panel Baggage Compartment	KPIN0004	1
5 .	Interior Panel Seat Side, LH	KPIN0005	1
6 .	Interior Panel Map Pocket	KPIN0023	1
7 .	Interior Panel Seat Side, RH	KPIN0007	1
8 .	Interior Panel Kick Panel, LH	KPIN0008	1
9 .	Interior Panel Kick Panel, RH	KPIN0009	1
10 .	Interior Panel Control Stick	KPIN0010	1
11 .	Interior Panel Inspection Panel Cover	KPIN0011	1
12 .	Interior Panel Boot Retainer	KPIN0012	2
13 .	Control Stick Boot	KPIN0013	2
14 .	Interior Panel Torque Tube Inspection Cover	KPIN0014	1
15 .	Interior Panel Seat Center	KPIN0006	1

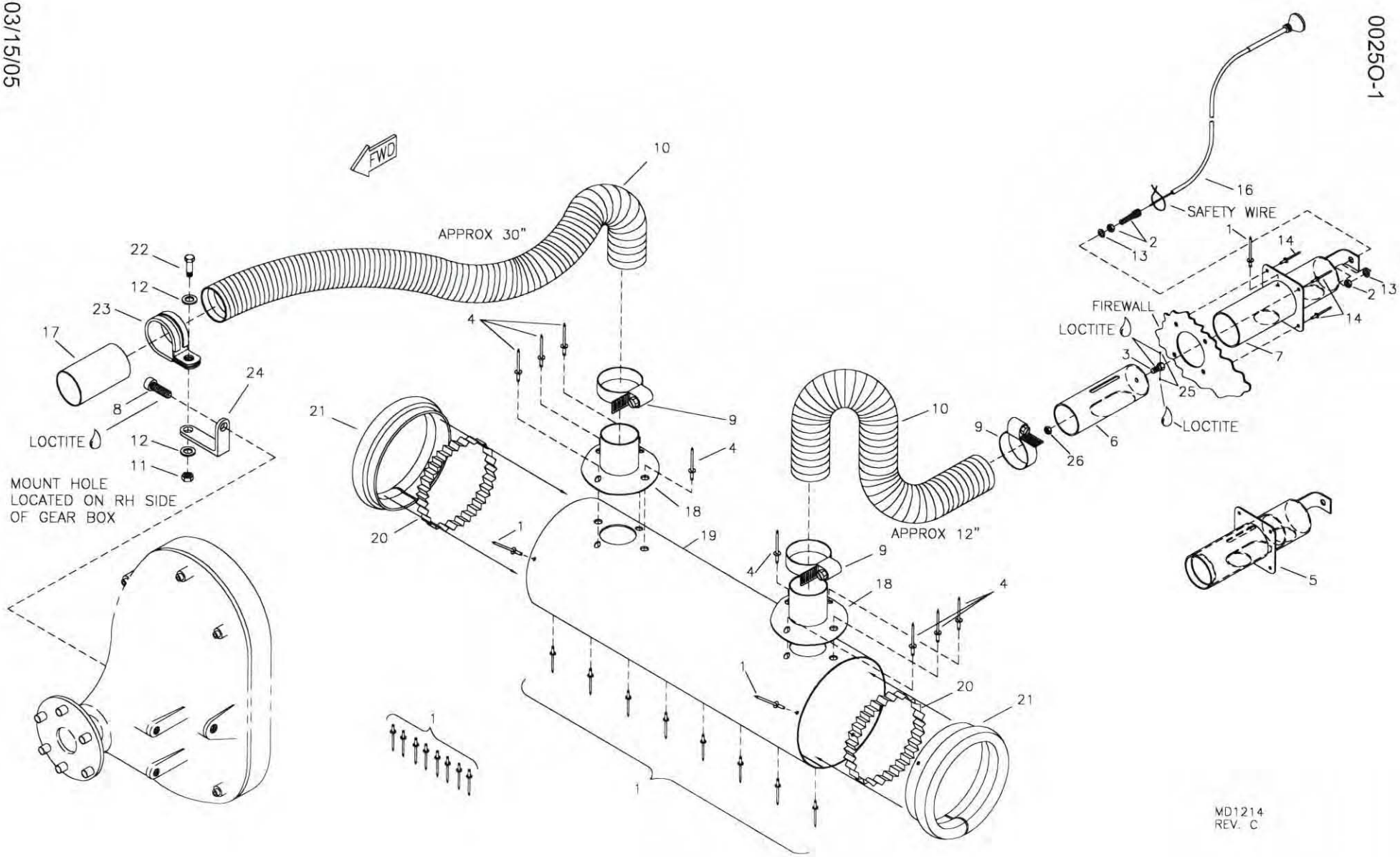

RANS S-6ES COYOTE II
OPTIONAL 912 MUFFLER HEATER ASSEMBLY

S-6ES COYOTE II - OPTIONAL 912 MUFFLER HEATER ASSEMBLY

#	DESCRIPTION	PART NUMBER	QUANTITY
1.	1/8" Aluminum Pop Rivet - Cherry Q	AAPQ-42	26
2.	Adjustable Cable Ferrule	12553	1
3.	Reverse Cable Stop	BPHW0006	1
4.	3/16" Aluminum Pop Rivet - Cherry Q	AAPQ-62	8
5.	Air Diverter Assembly	KASY0006	1
6.	Air Diverter - Slide*	KASY0006-1	0
7.	Air Diverter Body*	KASY0006-2	0
8.	10MM Bolt	M10X20	1
9.	Hose Clamp, 1 3/4"	5-5220	4
10.	1 1/2" Heater Duct/Creet Hose	CREET HOSE	5 ft
11.	3/16" Shear Nut	AN364-1032A	1
12.	3/16" Thin Washer	AN960-10L	2
13.	1/4" Plastic Washer	PW-4	2
14.	3/16" Aluminum Pop Rivet - Cherry Q	AAPQ-64	4
15.	3/16" Bolt	AN3-4A	1
16.	Control Cable	48701-0-96	1
17.	Inlet Tube	KPSY0053	1
18.	Inlet Manifold	KPSY0030	2
19.	S6 912 Heater Wrap	KPSY0013	1
20.	Muffler Wrap Stand Off	KPSY0017	2
21.	Fiberglass Rope	8815K162	4 ft
22.	3/16" Bolt	AN3-5A	1
23.	Cushioned Tube Clamp	MS21919-WDG24	1
24.	Angle Bracket	KPSY0016	1
25.	Set Screw	KSHW0043	2
26.	6MM Hex Nut	6MM HEX NUT	1

*Componant of KASY0006.

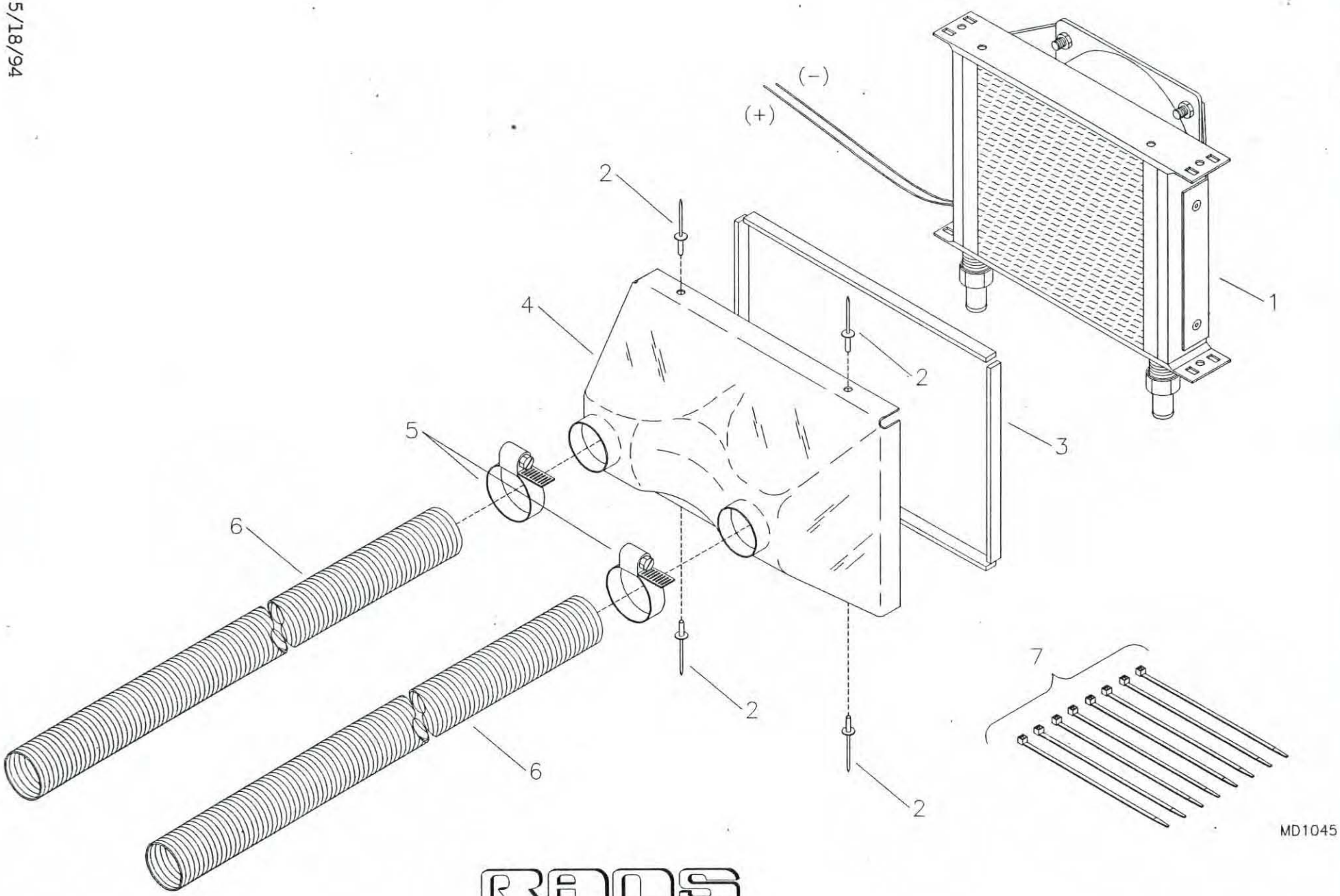

RANS

HEATER CORE ASSEMBLY WITH OPTIONAL SHROUD

S-6ES COYOTE II - 912 HEATER CORE ASSEMBLY
(WITH OPTIONAL SHROUD)

#	DESCRIPTION	PART NUMBER	QUANTITY
1 .	Heater Core *	21608	0
2 .	3/32" Aluminum Pop Rivet	40APR1/8	4
3 .	Foam Strip, 1/8" X 1/4"	FS-1/8X1/4	2
4 .	Heater Shroud	KPSY0008	1
5 .	Hose Clamp, 1 3/4"	5-5220	2
6 .	1 1/2" Heater Duct/Creet Hose	CREET HOSE	10 ft
7 .	Zip Ties	ZIP TIES	8

*Referenced from Heater Core Assembly.

02/22/13

0025P-01

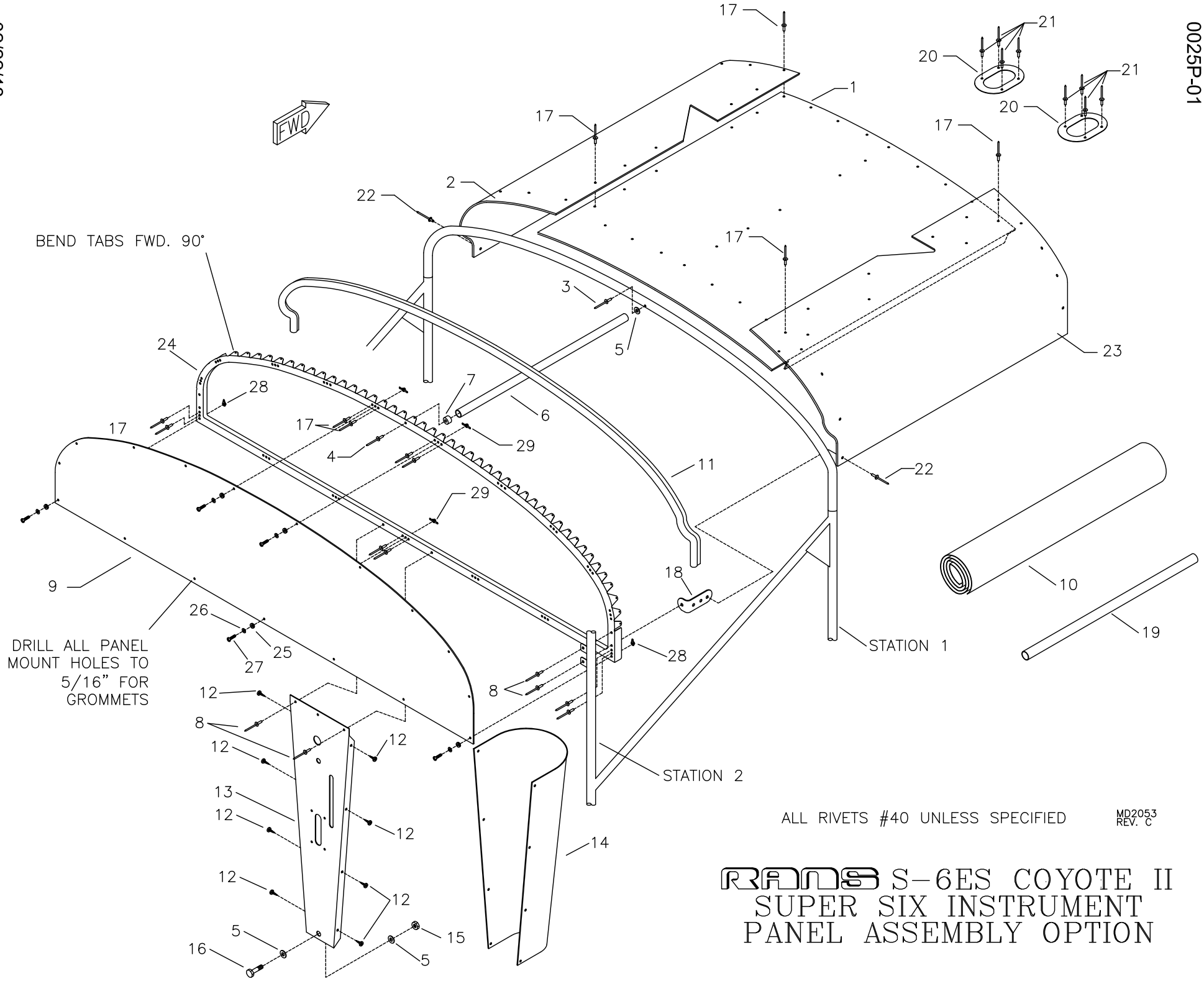

ALL RIVETS #40 UNLESS SPECIFIED

MD2053 REV. C

RANS S-6ES COYOTE II SUPER SIX INSTRUMENT PANEL ASSEMBLY OPTION

S-6ES COYOTE II - SUPER SIX INSTRUMENT PANEL FOR THE S-6ES

#	DESCRIPTION	PART NUMBER	QUANTITY
1 .	Instrument Panel Cover, Center	KPIP0104	1
2 .	Instrument Panel Cover - Outer - LH	KPIP0106-L	1
3 .	3/16" Aluminum Rivet - Cherry Q	AAPQ-64	1
4 .	1/8" Stainless Steel Rivet - Cherry Q	CCPQ-46	1
5 .	3/16" Thick Washer	AN960-10	3
6 .	Aluminum Brace Tube, 1/2" x .035 x X *	KAAC0021-1	0
7 .	Plastic Plug	CC-PF	1
8 .	1/8" Stainless Steel Rivet - Cherry Q	CCPQ-42	11
9 .	Instrument Panel - Blank	KPIP0134	1
10 .	Instrument Panel Cover Fabric	IP-FAB	1
11 .	Trimlock Cushion Lip	4100C-1/16	5 ft
12 .	#8 Pan Head Screw	8X1/2 PHS	8
13 .	Lower Instrument Panel (Flap Mount Trim) **	KPIP0073	1
14 .	Lower Instrument Panel Dust Cover	KPIP0003	1
15 .	3/16" Shear Nut	AN364-1032A	1
16 .	3/16" Bolt	AN3-4A	1
17 .	3/32" Aluminum Rivet	40APR1/8	106
18 .	Bent Tang	KPAC0016	2
19 .	S-6ES Retro Instrument Panel - Raw Stock Kit	KAAC0021	1
20 .	Instrument Panel Close Out	KPIP0107	2
21 .	1/8" Aluminum Rivet - Cherry Q	AAPQ-42	8
22 .	1/8" Stainless Steel Rivet - Cherry Q	CCPQ-41	2
23 .	Instrument Panel Cover - Outer - RH	KPIP0106-R	1
24 .	Instrument Panel Frame	KPIP0133	1
25 .	3/16" Rubber Grommet	KSAC0002	17
26 .	#8 Small Brass Washer	AN960-B8	17
27 .	#8 Pan Head Machine Screw	MS27039-0809	34
28 .	8-32 Single-Ear Nut Plate	MS21051-08	2
29 .	8-32 Nut Plate	MS21047-08	15

*Builder must fabricate from raw stock.
**For Flap Mount Trim only
***For Panel Mount Trim only.

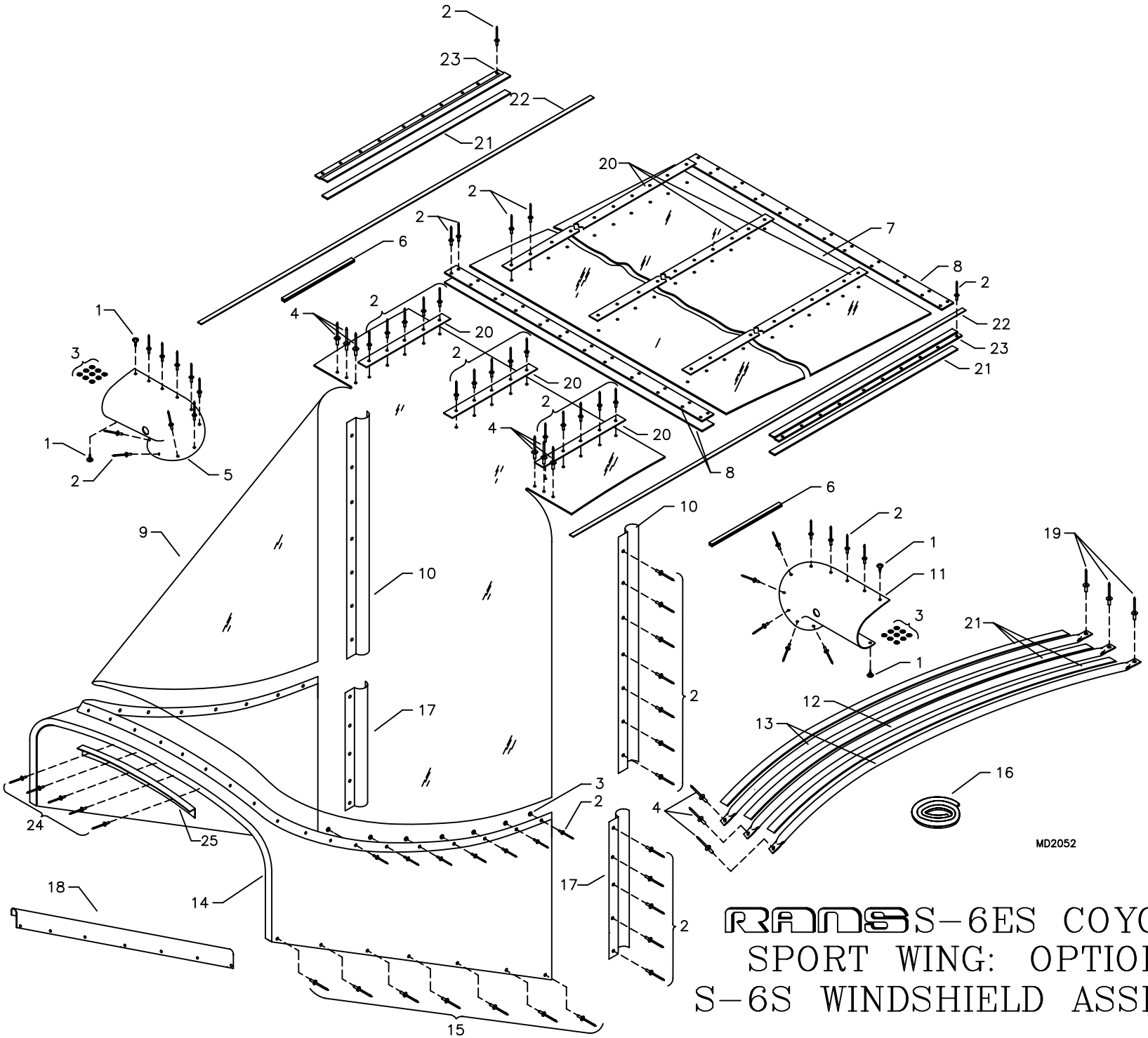

RANS S-6ES COYOTE II
SPORT WING: OPTIONAL
S-6S WINDSHIELD ASSEMBLY

S-6ES COYOTE II - SPORT WING: OPTIONAL S-6S WINDSHIELD

#	DESCRIPTION	PART NUMBER	QUANTITY
1.	#8 Pan Head Screw	8X1/2 PHS	4
2.	1/8" Aluminum Pop Rivet - Cherry Q	AAPQ-42	151
3.	1/8" Small Brass Washer	AN960-B4	41
4.	3/16" Aluminum Pop Rivet - Cherry Q	AAPQ-64	10
5.	RH Wing Cuff *	WS-CUFF-RH-ES	0
6.	Rubber Trim	X1011	30 in
7.	Skylight	KPWS0032	1
8.	Mating Strip	WS-WSSLS	3
9.	Lexan Windshield .090	KPWS0001	1
10.	Windshield Attach "Z"	KPWS0002	2
11.	LH Wing Cuff *	WS-CUFF-LH-ES	0
12.	Middle Rib *	KPWI0495	0
13.	Outer Rib *	KPWI0496	0
14.	Windshield Deck	WS-DECK	1
15.	1/8" Stainless Steel Pop Rivet - Cherry Q	CCPQ-42	14
16.	Foam Rubber Strip, 3/8" x 1/2"	WS-FS-1/2	1 rls
17.	Windshield Deck Attach "Z"	KPWS0004	2
18.	Windshield Deck Retainer Strip	KPWS0005	2
19.	3/16" Stainless Steel Pop Rivet - Cherry Q	CCPQ-64	3
20.	Skylight Trim Strip	KPWS0010	3
21.	1/2" Black Foam Tape	KSAC0021	15 ft
22.	Foam Strip, 3/8" x 1/2"	3/8-FS	96 in
23.	Skylight Hold Down Strip	KPWS0033	2
24.	1/8" Stainless Steel Rivet - Cherry Q	CCPQ-45	5
25.	Cowling Hold Down Strip **	S1-CHDS-ES	1

*Supplied with standard kit.
**Referenced from Firewall.

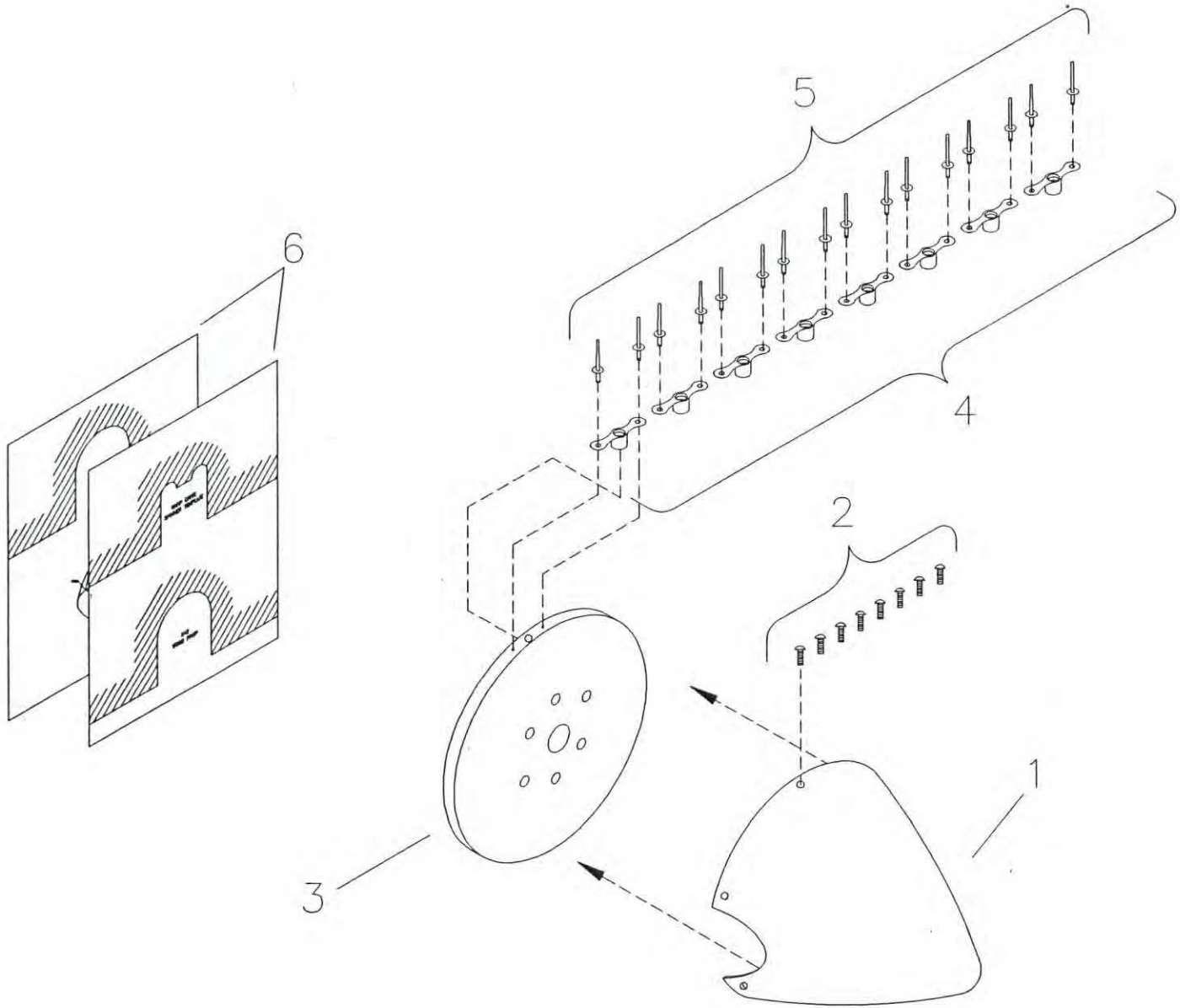

RANS S-6S COYOTE II
12" SPINNER FOR S-6ES

MD2077

S-6ES COYOTE II - OPTIONAL 12" SPINNER

#	DESCRIPTION	PART NUMBER	QUANTITY
1.	Spinner Dome, 12"	SPIN-12	1
2.	Pan Head Phillips Bolt (5/8" long)	KSHW0071	10
3.	Spinner Backing Plate, 12" (-1 912)	SPIN-BC12-582	1
3.	Spinner Backing Plate, 12" - 912/912S (-1 582)	KPPW0042	1
4.	3/16" Nut Plate	K-1000-3	10
5.	3/32" Aluminum Pop Rivet	40APR1/4	20
6.	Spinner Template *	-----	0

*Include in the text portion of manual.

0025P-7

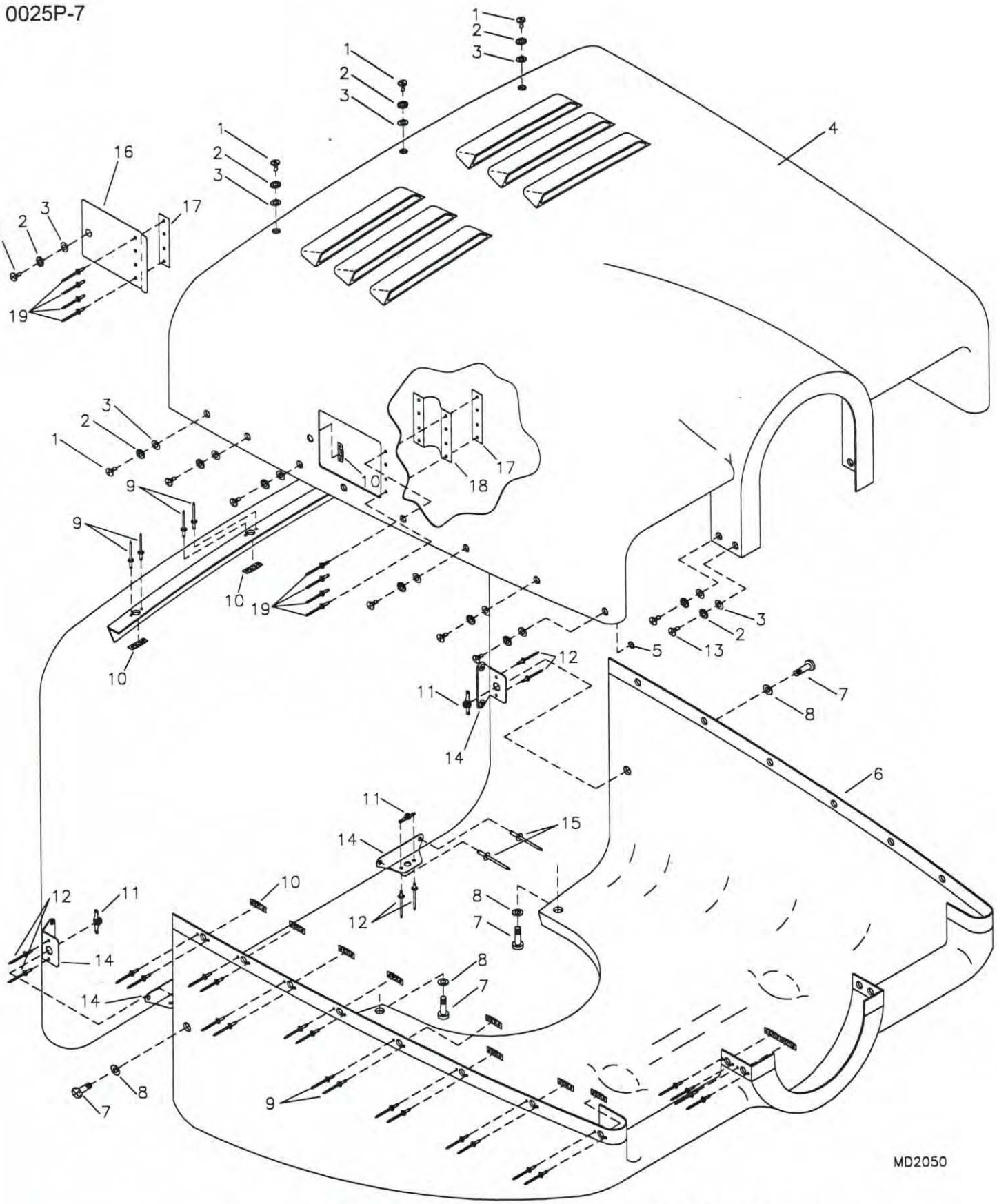

RANS S-6ES COYOTE II
OPTIONAL SUPER SIX 582/912
COWLING ASSEMBLY

10/24/03

S-6ES COYOTE II - OPTIONAL S-6S 582/912/912S COWLING ASSEMBLY

#	DESCRIPTION	PART NUMBER	QUANTITY
1.	1/4 Turn Stud, 582	#180	19
1.	1/4 Turn Stud, 912/912S	#180	20
2.	Rubber Washer, 582	#201	23
2.	Rubber Washer, 912/912S	#201	24
3.	Wear Washer Nylon, 912/912S	#103	24
3.	Wear Washer Nylon, 582	#103	23
4.	S-6S Cowling Top, 503/582/912/912S	KPCW0038	1
5.	Snap Ring, 582	#101	19
5.	Snap Ring, 912/912S	#101	20
6.	S-6S Cowling Bottom, 503/582/912,912S	KPCW0037	1
7.	3/16" Truss Head Bolt	AN526-C1032R12	4
8.	3/16" Plastic Washer	PW-3	10
9.	3/32" Aluminum Pop Rivet, 912/912S	40APR1/4	48
9.	3/32" Aluminum Pop Rivet, 582	40APR1/4	46
10.	1/4 Turn Receptacle, 912/912S	#302	24
10.	1/4 Turn Receptacle, 582	#302	23
11.	3/16" Nut Plate	K-1000-3	4
12.	3/32" Aluminum Pop Rivet	40APR1/8	8
13.	1/4 Turn Stud	#200	4
14.	Mounting Bracket	KPAC0003	4
15.	1/8" Aluminum Pop Rivet - Cherry Q	AAPQ-42	8
16.	Oil Tank Access Door, 912/912S only **	KPCW0025	1
17.	Aluminum Strip, 3/4" x .020 x 7" *, **	KAAC0039-1	1
18.	Vinyl Fabric, 2 1/2" x 3 1/2" **	KAAC0039-2	1
19.	1/8" Aluminum Pop Rivet - Avex **	1691-0410	8

*Raw Stock, cut into 2 pieces.
**912/912S only.

S-6ES COYOTE II

This section intentionally left blank.

S-6ES COYOTE II

This section intentionally left blank.

0025S-1

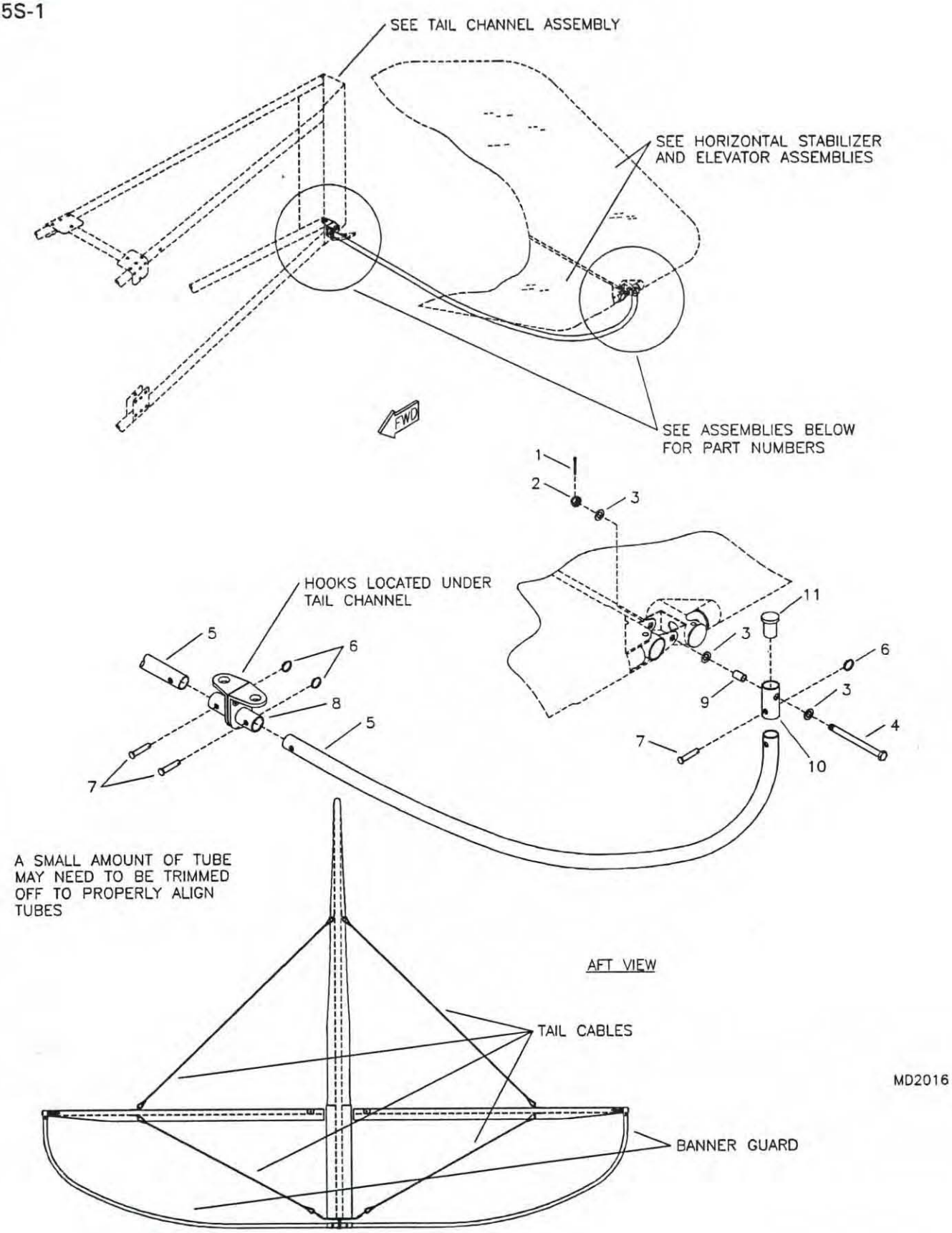

RANS S-6ES COYOTE II OPTIONAL BANNER TOWING GUARD

02/26/96

S-6ES COYOTE II OPTIONAL BANNER TOWING GUARD

#	DESCRIPTION	PART NUMBER	QUANTITY
1.	Small Cotter Pin	MS24665-134	2
2.	3/16" Castle Nut	AN310-3	2
3.	3/16" Washer	AN960-10	4
4.	3/16" Bolt	AN3-23	2
5.	Banner Guard	KPHS0022	2
6.	Loc Ring	RL 27 1/4	4
7.	Clevis Pin	MS20392-2C25	4
8.	Middle Connect Tube	KPHS0023	1
9.	Spacer Bushing, 1/4X.028*	RAW STOCK	2 in
10.	Outer Connect Tube	KPHS0024	2
11.	3/4" Endcap	3/4 ENDCAP	2

*Builder fabricates from raw stock.

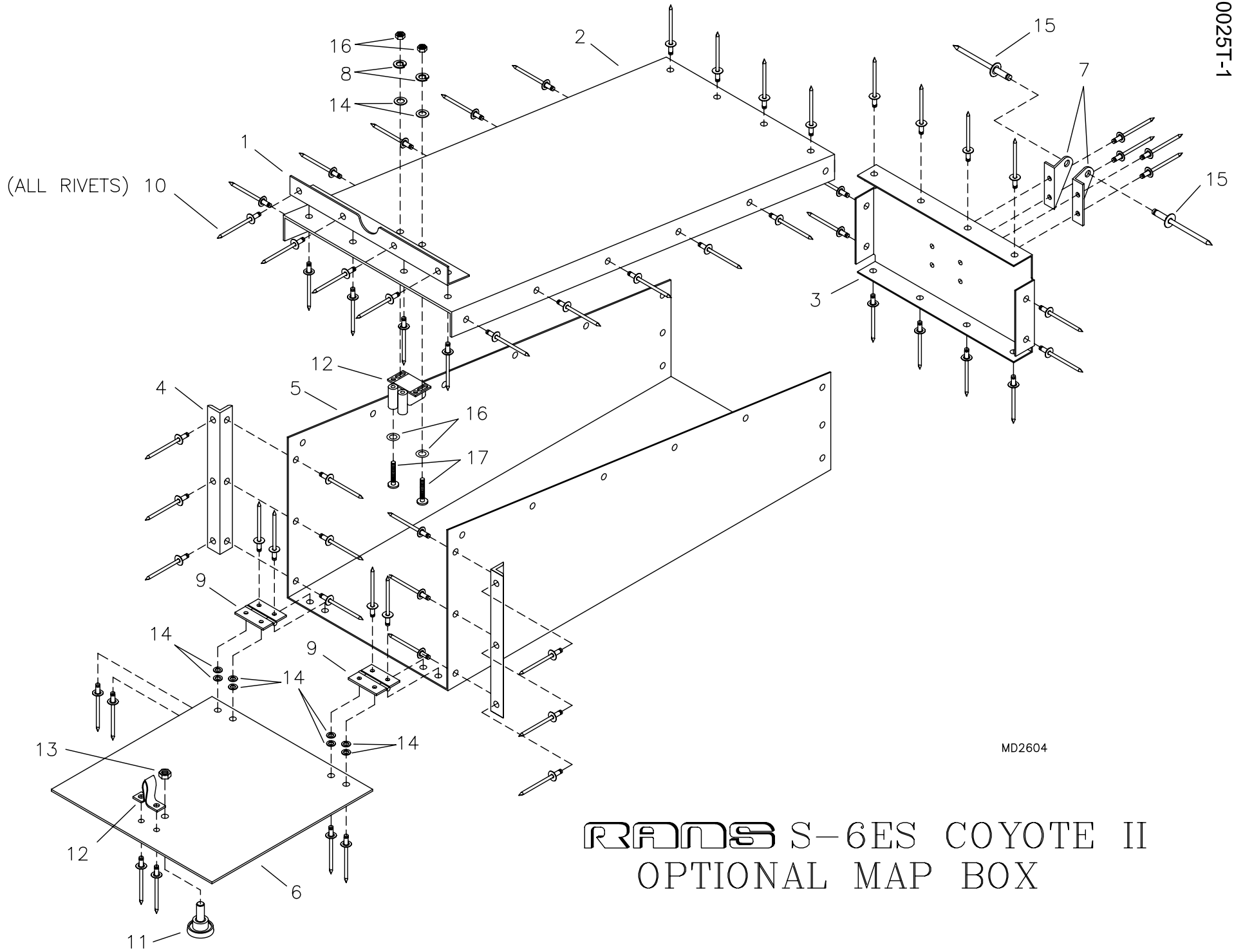

RANS S-6ES COYOTE II
OPTIONAL MAP BOX

S-6ES COYOTE II - OPTIONAL MAP BOX

#	DESCRIPTION	PART NUMBER	QUANTITY
1 .	Top Angle	KPIP0019	1
2 .	Map Box Top	KPIP0020	1
3 .	Map Box FWD Close Out	KPIP0021	1
4 .	Side Angle	KPIP0022	2
5 .	Map Box	KPIP0023	1
6 .	Map Box Door	KPIP0024	1
7 .	FWD Attach Bracket - LH & RH	KPIP0025-LH	1
7 .	FWD Attach Bracket - LH & RH	KPIP0025-RH	1
8 .	Loc Washer	AN935-B4	2
9 .	Brass Door Hinge	KSIP0006	2
10 .	1/8" Aluminum Pop Rivet - Avex	1691-0410	60
11 .	Map Box Knob	KSAC0012	1
12 .	Door Catch	KSIP0007	1
13 .	3/16" Shear Nut	AN364-1032A	1
14 .	1/8" Small Brass Washer	AN960-B4	12
15 .	1/8" Stainless Steel Pop Rivet - Cherry Q	CCPQ-42	2
16 .	Brass Nut	IP-BN	2
17 .	Brass Screw	IP-BB	2

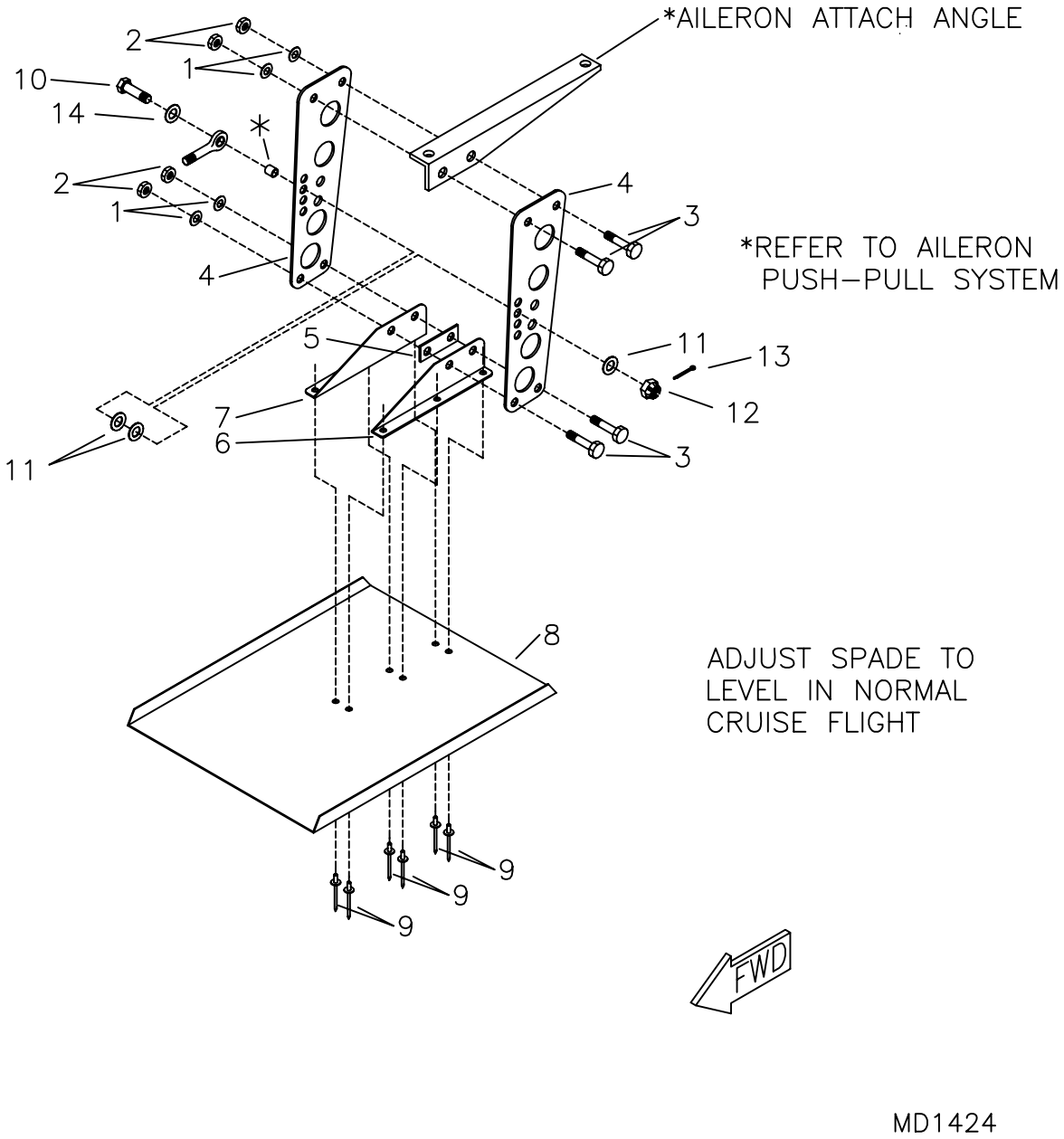

RANS S-6ES COYOTE II
AILERON SPADE ASSEMBLY

S-6ES COYOTE II - OPTIONAL AILERON SPADE

#	DESCRIPTION	PART NUMBER	QUANTITY
1 .	3/16" Thin Washer	AN960-10L	8
2 .	3/16" Shear Nut	AN364-1032A	8
3 .	3/16" Bolt	AN3-5A	8
4 .	Aileron Horn	W-A-HORN	4
5 .	Spade Shim	W-SPADE-SHIM	2
6 .	Spade Attach Angle	W-SPADE-ATL	2
7 .	Spade Attach Angle	W-SPADE-ATR	2
8 .	Spade	W-SPADE	2
9 .	1/8" Stainless Steel Pop Rivet - Cherry Q	CCPQ-42	12
10 .	3/16" Bolt	AN3-11	2
11 .	3/16" Thick Washer	AN960-10	6
12 .	3/16" Castle Nut	AN310-3	2
13 .	Small Cotter Pin	MS24665-134	2
14 .	#10 SS Washer	BSHW0022	2

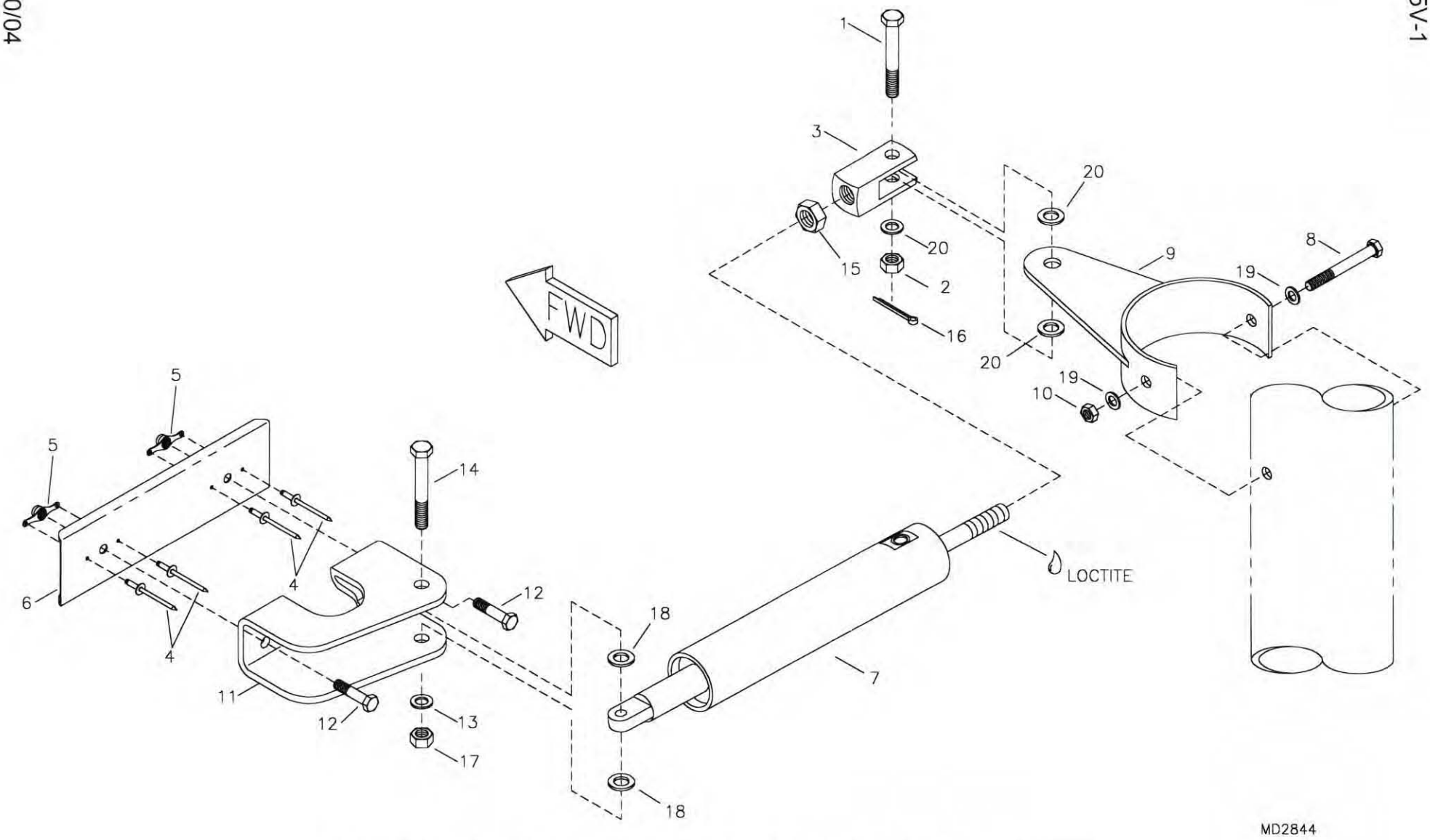

RANS S-6ES COYOTE II TRIKE
OPTIONAL NOSE GEAR SHIMMY DAMPENER

S-6ES COYOTE II - OPTIONAL TRIKE NOSE GEAR SHIMMY DAMPENER

#	DESCRIPTION	PART NUMBER	QUANTITY
1.	3/16" Bolt	AN3-7	1
2.	3/16" Castle Nut	AN310-3	1
3.	Clevis *	-----	0
4.	3/32" Aluminum Pop Rivet	40APR1/8	4
5.	3/16" Nut Plate	K-1000-3	2
6.	Shimmy Damper Backing Plate	KPNG0047	1
7.	Shimmy Damper	KSAC0024	1
8.	3/16" Bolt	AN3-20A	1
9.	Shimmy Damper Horn - Nose Gear	KPNG0046	1
10.	3/16" Shear Nut	AN364-1032A	1
11.	Shimmy Damper Mount - Nose Gear	KPNG0045	1
12.	3/16" Bolt	AN3-3A	2
13.	1/4" Thin Washer	AN960-416L	1
14.	1/4" Bolt	AN4-10A	1
15.	Jam Nut *	-----	0
16.	Small Cotter Pin	MS24665-134	1
17.	1/4" Shear Nut	AN364-428A	1
18.	1/4" Plastic Washer	PW-4	2
19.	3/16" Thin Washer	AN960-10L	2
20.	3/16" Thick Washer	AN960-10	3

*Supplied with Shimmy Dampener.

S-6ES COYOTE II

This section intentionally left blank.

S-6ES COYOTE II

This section intentionally left blank.

12/29/2010

0025Y-01

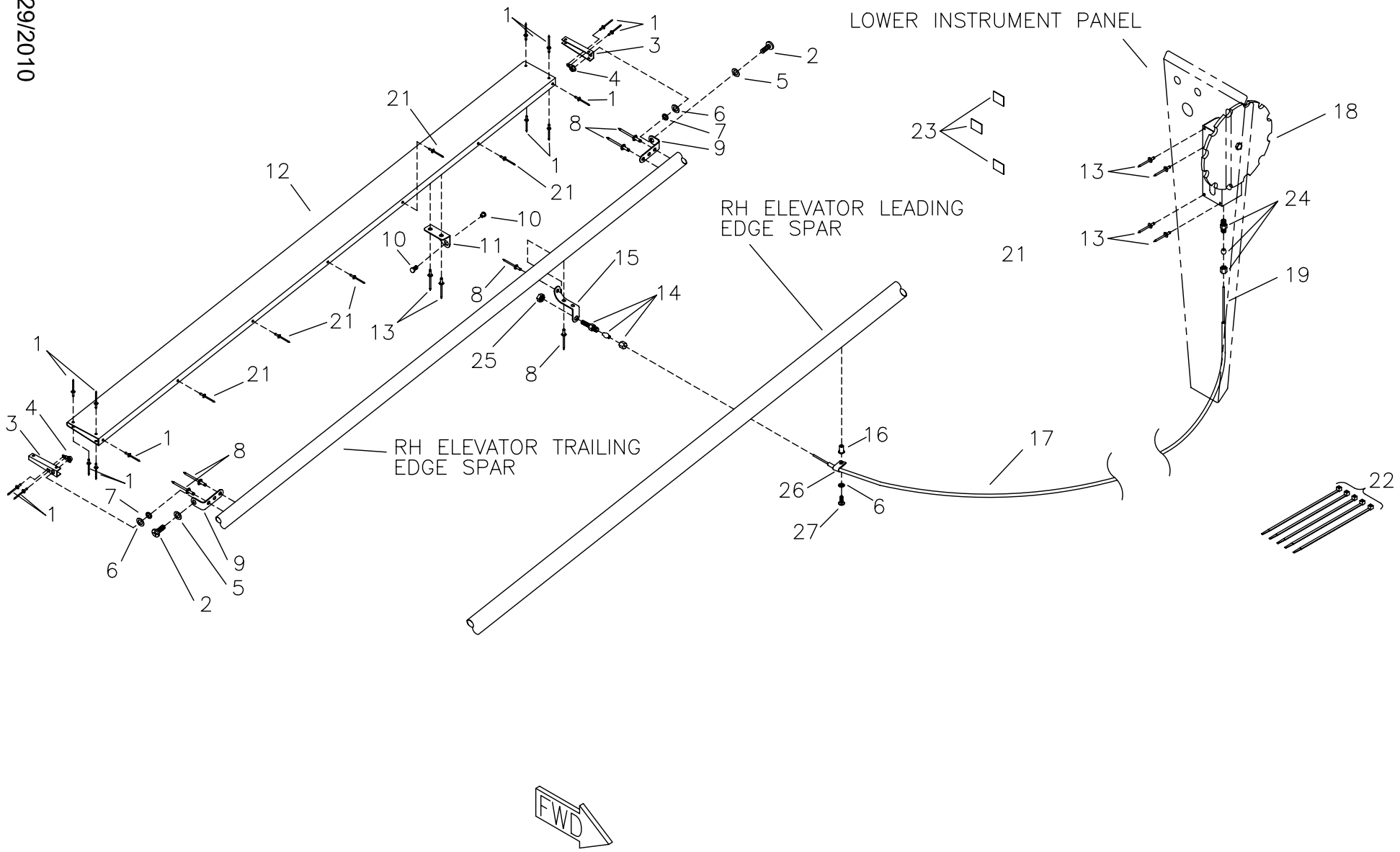

MD3640
REV. B

RANS S-6ES COYOTE II
OPTIONAL PANEL MOUNT TRIM SYSTEM ASSEMBLY

S-6ES COYOTE II - OPTIONAL PANEL MOUNT MECHANICAL TRIM

#	DESCRIPTION	PART NUMBER	QUANTITY
1 .	3/32" Aluminum Pop Rivet	40APR1/8	14
2 .	3/16" Truss Head Bolt	AN526-C1032R12	2
3 .	Trim Tab End Rib	KPTR0007	2
4 .	3/16" Single Ear Nut Plate	MS21051-L3	2
5 .	3/16" Thin Washer	AN960-10L	2
6 .	3/16" Thick Washer	AN960-10	2
7 .	Spacer Bushing, 1/4" x .028" x 1/16" *	SB-1/16X1/4	2
8 .	3/16" Aluminum Pop Rivet - Cherry Q	AAPQ-62	6
9 .	Trim Tab Hinge	ST-16-BENT	2
10 .	Wire Swivel/Screw Stop	2361	1
11 .	Trim Tab Horn	KPTR0008	1
12 .	Trim Tab	KPTR0009	1
13 .	1/8" Stainless Steel Pop Rivet - Cherry Q	CCPQ-42	6
14 .	Conduit Adjuster Assembly	KSFS0014	1
15 .	Cable Housing Stop Bracket	KPTR0005	1
16 .	3/16" Rivet Nut	MS27130-A25K	1
17 .	Trim Cable Housing	KSAC0008	22 ft
18 .	Trim Wheel Assembly	TR-WA	1
19 .	Trim Push Wire	TR-PW	22 ft
20 .	Lower Inst. Panel (S-6ES Panel-Mounted Trim)	KPIP0074	1
21 .	1/8" Aluminum Pop Rivet - Cherry Q	AAPQ-41	5
22 .	Short Black Nylon Ties	N-TIES	5
23 .	Indicator Labels **	INDI-LABEL	0
24 .	Fitting	IMP68-3/16X1/8	1
25 .	1/4" Shear Nut	AN364-428A	1
26 .	Cushioned Tube Clamp	MS21919WDG3	1
27 .	3/16" Bolt	AN3-3A	1

*Builder must fabricate from raw stock.
** Included on Decal Sheet

07/18/2007

0025Y-03

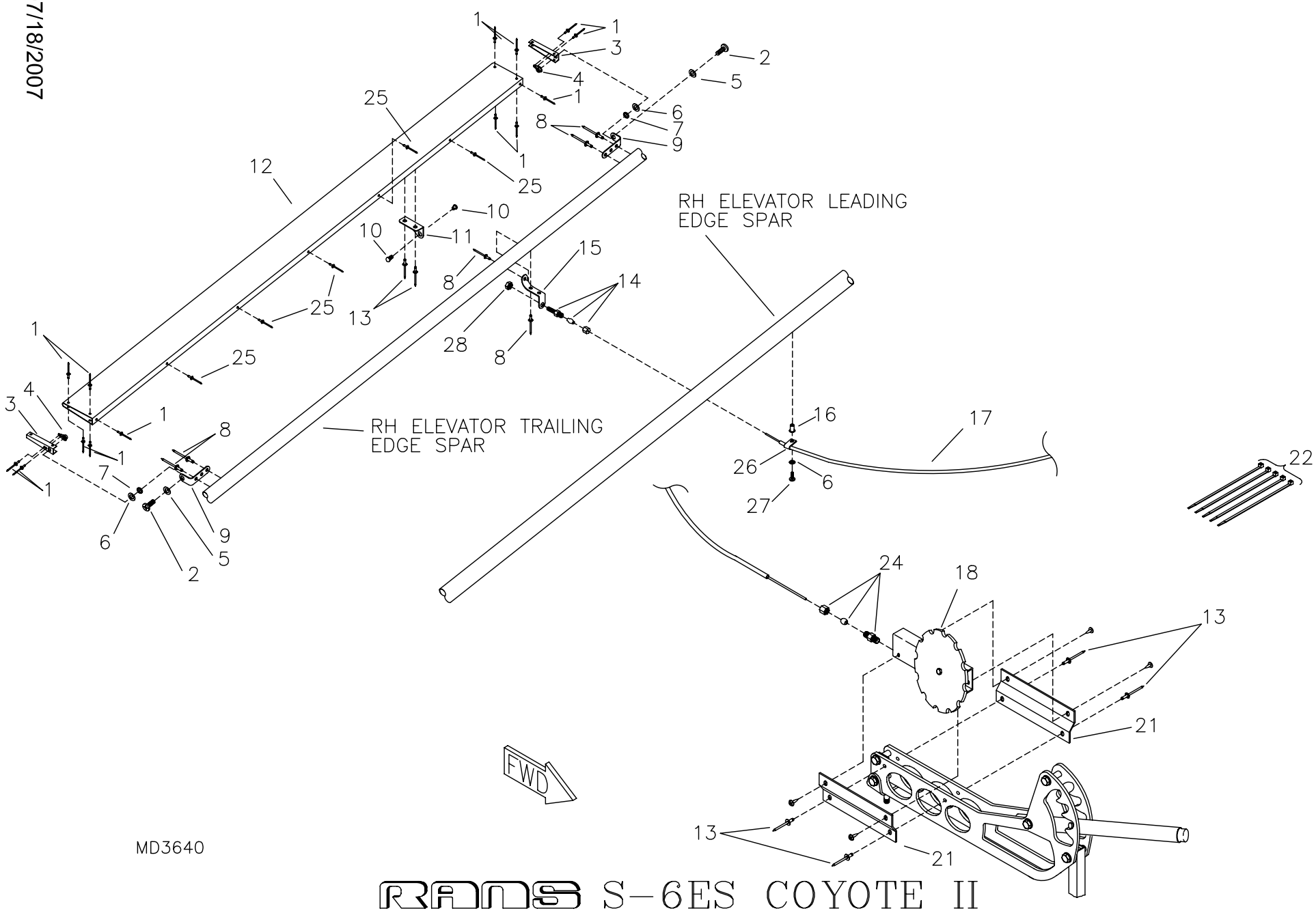

RANS S-6ES COYOTE II
OPTIONAL FLAP LEVER MOUNT TRIM SYSTEM ASSEMBLY

S-6ES COYOTE II - OPTIONAL FLAP LEVER MOUNT MECHANICAL TRIM

#	DESCRIPTION	PART NUMBER	QUANTITY
1 .	3/32" Aluminum Pop Rivet	40APR1/8	14
2 .	3/16" Truss Head Bolt	AN526-C1032R12	2
3 .	Trim Tab End Rib	KPTR0007	2
4 .	3/16" Single Ear Nut Plate	MS21051-L3	2
5 .	3/16" Thin Washer	AN960-10L	2
6 .	3/16" Thick Washer	AN960-10	2
7 .	Spacer Bushing, 1/16" x 1/4" x .028 *	SB-1/16X1/4	2
8 .	3/16" Aluminum Pop Rivet - Cherry Q	AAPQ-62	8
9 .	Trim Tab Hinge	ST-16-BENT	2
10 .	Wire Swivel/Screw Stop	2361	1
11 .	Trim Tab Horn	KPTR0008	1
12 .	Trim Tab	KPTR0009	1
13 .	1/8" Stainless Steel Pop Rivet - Cherry Q	CCPQ-42	6
14 .	Conduit Adjuster Assembly	KSFS0014	1
15 .	Cable Housing Stop Bracket	KPTR0005	1
16 .	3/16" Rivet Nut	MS27130-A25K	1
17 .	Trim Cable Housing	KSAC0008	22 ft
18 .	Trim Wheel Assembly	TR-WA	1
19 .	Trim Push Wire	TR-PW	22 ft
20 .	Lower Inst. Panel (Flap-Mounted Trim Wheel)	KPIP0073	1
21 .	Trim Assembly Mount Bracket (Flap Mech Mt Only)	KPTR0004	2
22 .	Short Black Nylon Ties	N-TIES	5
23 .	Indicator Labels **	INDI-LABEL	0
24 .	Fitting	IMP68-3/16X1/8	1
25 .	1/8" Aluminum Pop Rivet - Cherry Q	AAPQ-41	5
26 .	Cushioned Tube Clamp	MS21919WDG3	1
27 .	3/16" Bolt	AN3-3A	1
28 .	1/4" Shear Nut	AN364-428A	1

*Builder must fabricate from raw stock.
** Included on Decal Sheet

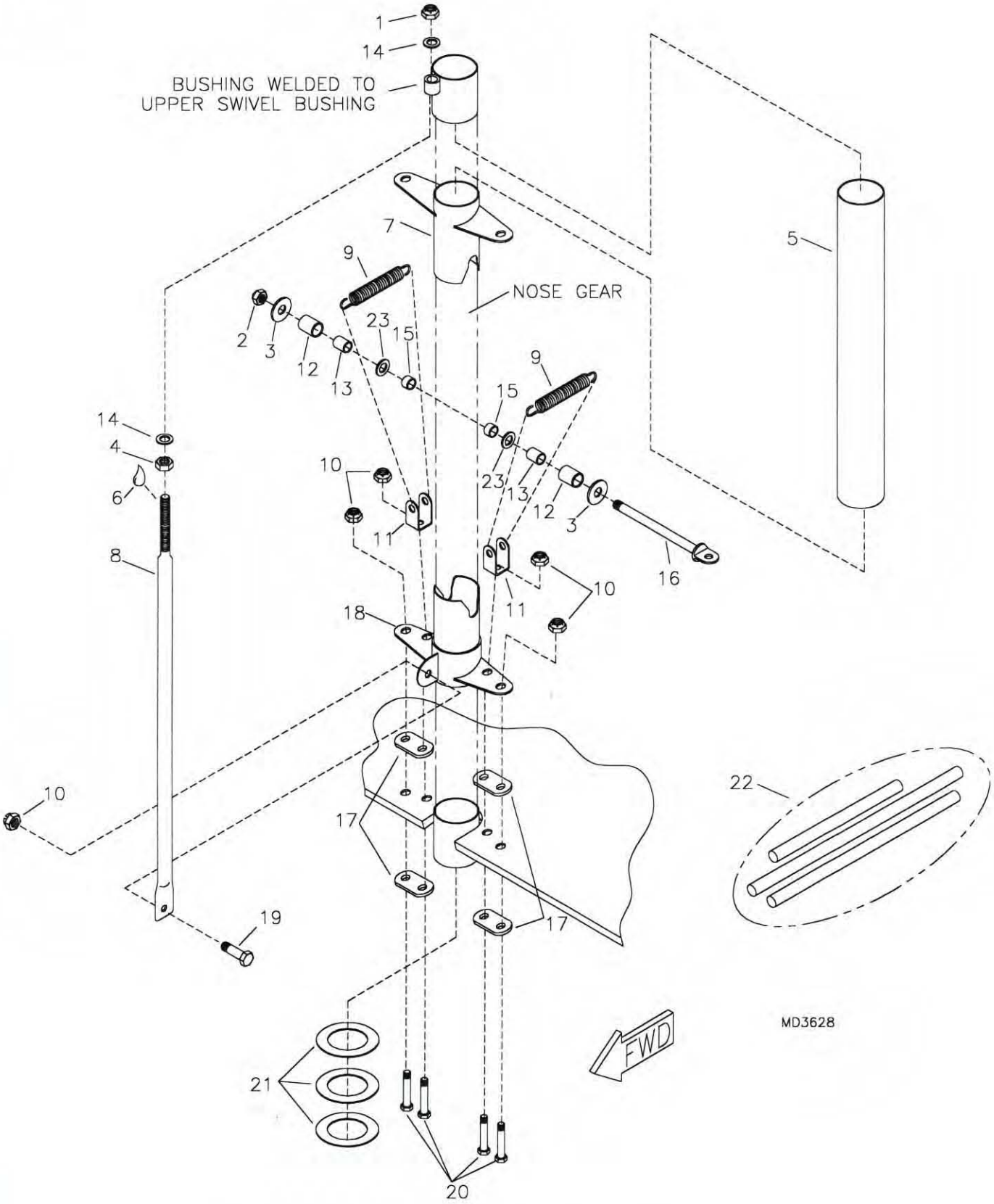

RANS S-6ES COYOTE II
OPTIONAL NOSE GEAR DISCONNECT

S-6ES COYOTE II - OPTIONAL NOSE GEAR DISCONNECT

#	DESCRIPTION	PART NUMBER	QUANTITY
1.	1/4" Shear Nut	AN364-428A	1
2.	5/16" Shear Nut	AN364-524A	1
3.	1/4" Large Washer	AN970-4	2
4.	1/4" Plain Nut	AN345-416	1
5.	Sleeve - Nose Gear	KPNG0068	1
6.	Loctite Blue	LOC-TITE	0
7.	Steer Cam	KPNG0065	1
8.	Keep Rod	KPNG0066	1
9.	Springs	C-5125	2
10.	3/16" Shear Nut	AN364-1032A	5
11.	Shackle	RL-205-T	2
12.	Aluminum Bushing, 1/2" x .058 x 3/8" *	KAAC0024-1	0
13.	Steel Bushing, 3/8" x .028 x 7/16" *	KAAC0024-2	0
14.	1/4" Thick Washer	AN960-416	2
15.	Steel Bushing, 3/8" x .028 x 1/4" *	KAAC0024-2	0
16.	5/16" Eyebolt	AN44-34A	1
17.	Aluminum Shim	KPBS0003	4
18.	Locking Cam	KPNG0064	1
19.	3/16" Bolt	AN3-4A	1
20.	3/16" Bolt	AN3-14A	4
21.	Bearing Washer**	TRA2435	3
22.	Raw Stock Kit - Nose Gear Disconnect	KAAC0024	1
23.	5/16" Thick Washer	AN960-516	2

*Builder must fabricate from raw stock.
**As required.

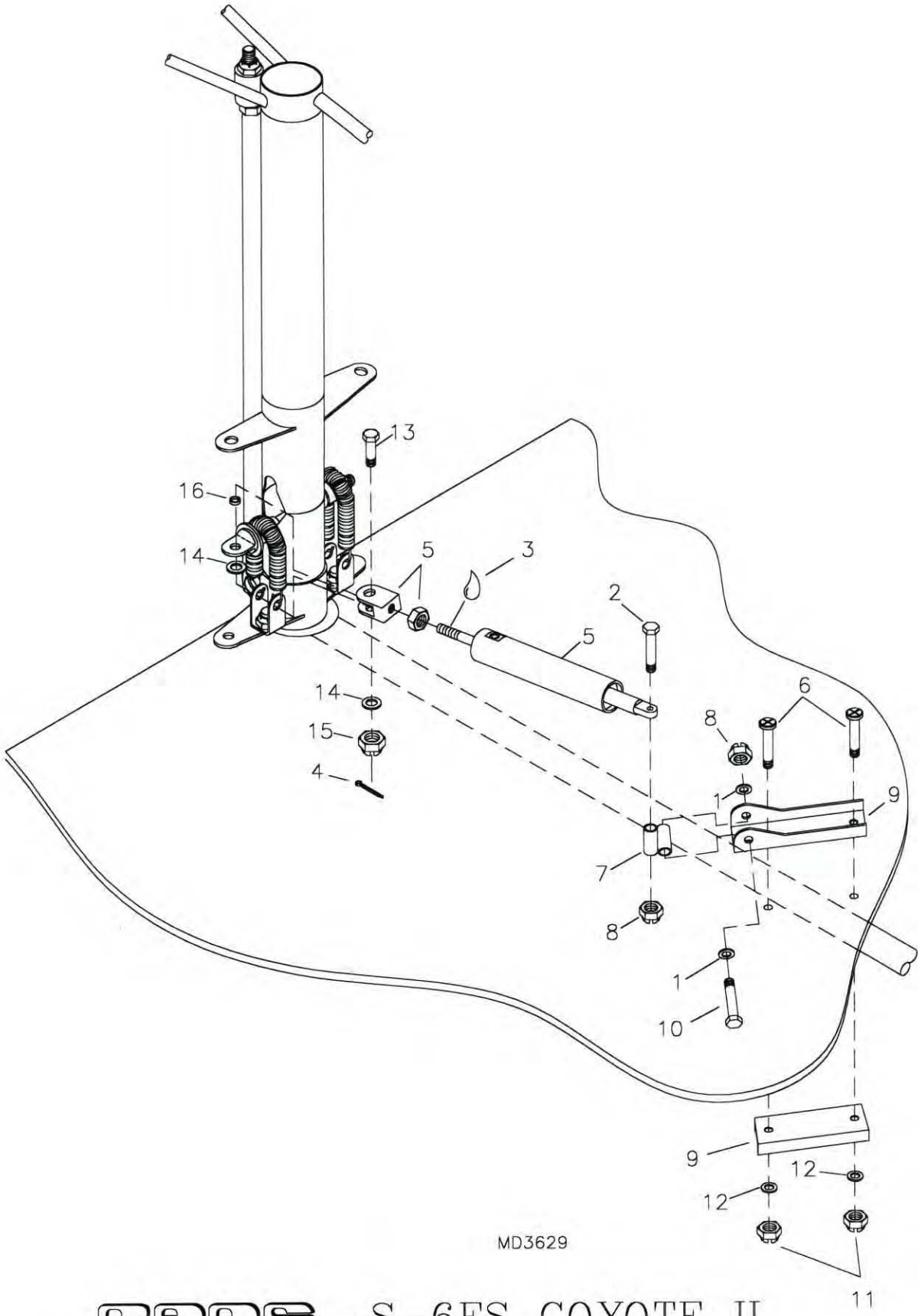

RANS S-6ES COYOTE II
OPTIONAL NOSE GEAR DISCONNECT SHIMMY DAMPENER

S-6ES COYOTE II - OPTIONAL NOSE GEAR DISCONNECT SHIMMY DAMPENER

#	DESCRIPTION	PART NUMBER	QUANTITY
1.	1/4" Thin Washer	AN960-416L	2
2.	1/4" Bolt	AN4-13A	1
3.	Loctite Blue	LOC-TITE	0
4.	Clevis Kit	MS24665-134	1
5.	Shimmy Damper	KSAC0024	1
6.	3/16" Bolt	AN3-13A	2
7.	Universal Bushing Joint	KPNG0067	1
8.	1/4" Shear Nut	AN364-428A	2
9.	Long Wing Channel *	W-WCL	2
10.	1/4" Bolt	AN4-15A	1
11.	3/16" Shear Nut	AN364-1032A	2
12.	3/16" Thin Washer	AN960-10L	2
13.	3/16" Bolt	AN3-7	1
14.	3/16" Thick Washer	AN960-10	2
15.	3/16" Castle Nut	AN310-3	1
16.	Bushing, 1/4" x .028 *	KPAC0033	1

*Builder must modify, refer to text for instructions.

12/17/99

0025AA-1

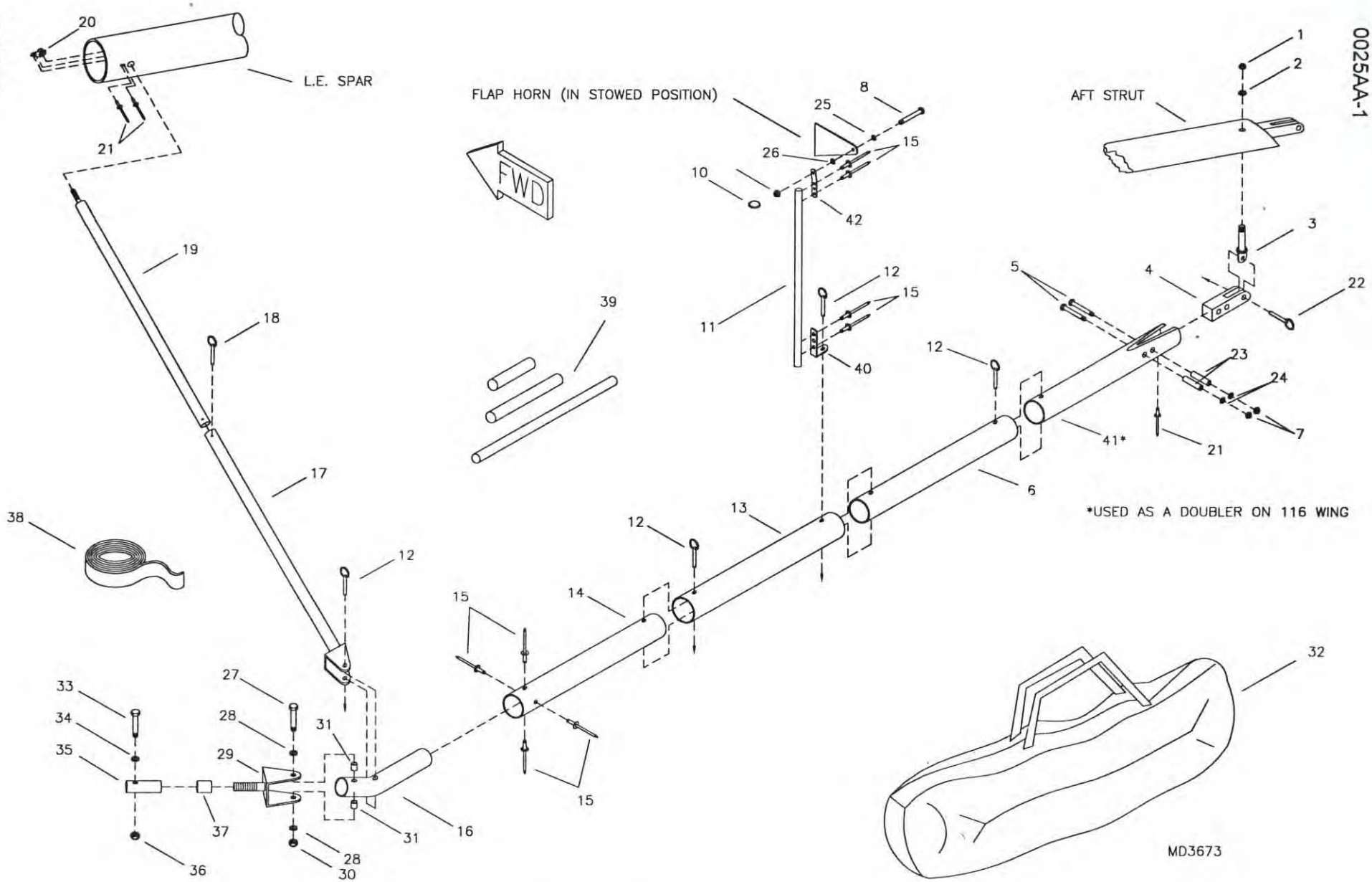

RANS S-6ES STANDARD AND 116 WING OPTIONAL SWING WING SYSTEM, WING SUPPORT

S-6ES COYOTE II - OPTIONAL SWING WING SYSTEM

WING SUPPORT - STD & 116 WING

#	DESCRIPTION	PART NUMBER	QUANTITY
1.	5/16" Shear Nut	AN364-524A	2
2.	5/16" Thin Washer	AN960-516L	2
3.	5/16" Eyebolt	AN44-13A	2
4.	Lift Strut Connector	KPLS0002	2
5.	3/16" Bolt	AN3-14A	4
6.	Trailing Edge Support Tube, Upper	KPWI0316	2
7.	3/16" Shear Acorn Nut	22NKM02	4
8.	3/16" Bolt **	AN3-7	2
9.	3/16" Castle Nut **	AN310-3	2
10.	Loc Ring	RL 27 1/4	2
11.	Flap Support, 1/2" x .035 x 20" Aluminum Tube ****	KAAC0029-4	2
12.	1/4" Quick Pin	PIN 1/4X1.5	8
13.	Trailing Edge Support Tube, Middle	KPWI0317	2
14.	Trailing Edge Support Tube, Lower	KPWI0318	2
15.	3/16" Stainless Steel Pop Rivet - Cherry Q	CCPQ-62	16
16.	Pivot Tube	KPWI0319	2
17.	Leading Edge Support Tube, Lower	KPWI0315	2
18.	3/16" Quick Pin	PIN-3/16X.9	2
19.	Leading Edge Support Tube, Upper	KPWI0314	2
20.	1/4" Single Ear Nut Plate	MS21071-L4	2
21.	3/32" Aluminum Pop Rivet	40APR1/4	4
22.	1/4" Quick Pin	PIN 1/4X1.2	2
23.	Aluminum Bushing, 1/4" x .028 x 1 1/4" **	KAAC0029-2	0
24.	3/16" Thin Washer	AN960-10L	4
25.	3/16" Plastic Washer *	PW-3	0
26.	3/16" Thin Washer *	AN960-10L	0
27.	1/4" Bolt	AN4-22A	2
28.	1/4" Thick Washer	AN960-416	4
29.	Swing Wing U Bracket - Lower	KPWI0275	2
30.	1/4" Shear Acorn Nut	52NKTE-048	2
31.	Aluminum Bushing, 3/8" x .058 x 3/16" **	KAAC0029-3	0
32.	Swing Wing Carry-All	KPAC0153	1
33.	3/16" Bolt	AN3-7A	2
34.	3/16" Thick Washer	AN960-10	2
35.	I-Nut	KPAC0151	2
36.	3/16" Shear Nut	AN364-1032A	2
37.	Drilled Bushing Aluminum Insert	JS-BUC-B	2
38.	1/2" Black Foam Tape ***	KSAC0021	12 in
39.	Swing Wing - Raw Stock Kit	KAAC0029	1
40.	Adjustable Tang - Bent	ST-16-BENT	2
41.	Trailing Edge Doubler/Extension	KPWI0331	2
42.	Adjustable Tang	ST-16	2

*Supplied with Base Kit.
**Replaces part in Base kit.
***Only necessary with Bubble Doors.
****Builder must modify.

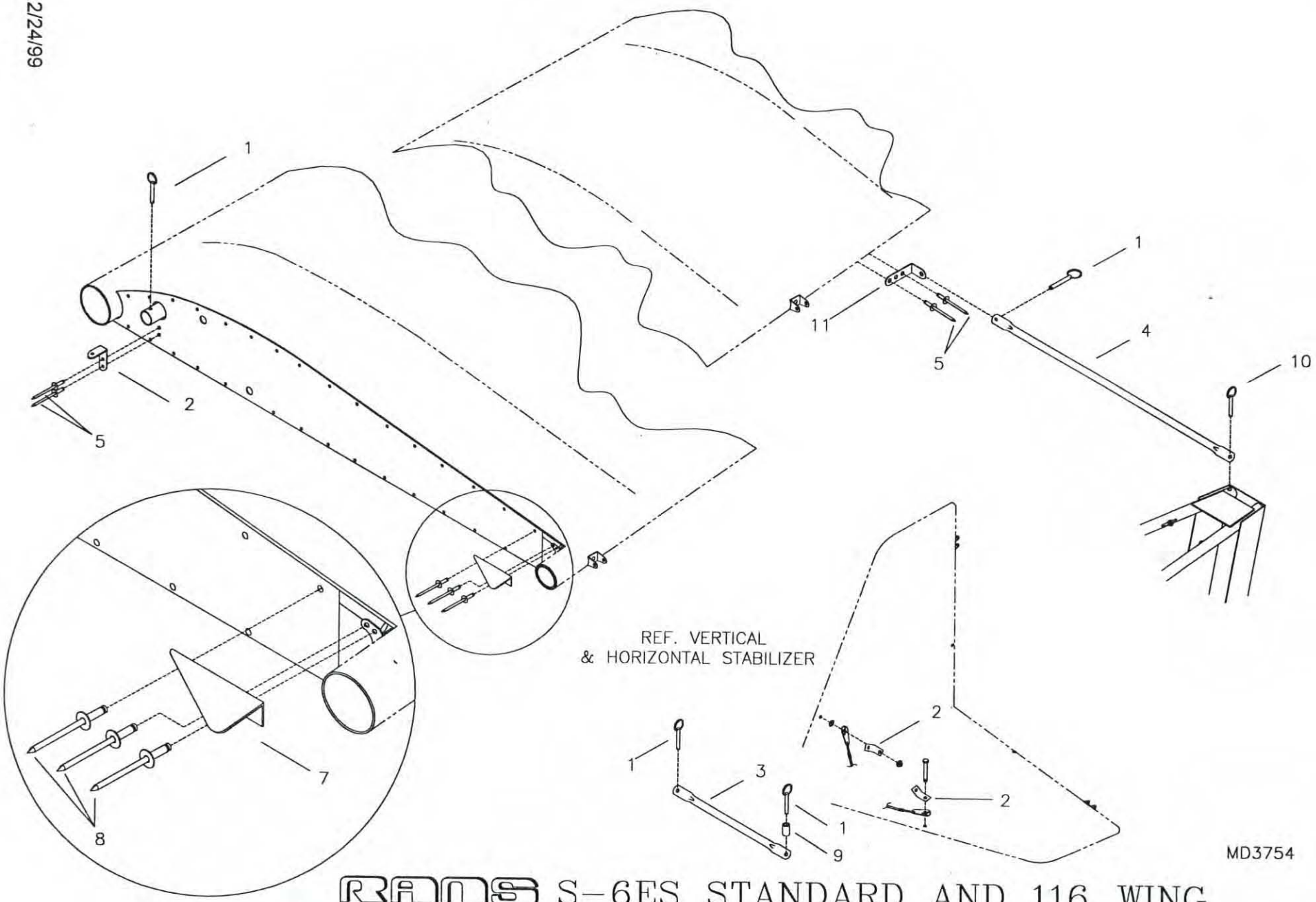

RANS S-6ES STANDARD AND 116 WING
OPTIONAL SWING WING SYSTEM, TAIL BRACE AND HARDWARE

S-6ES COYOTE II - OPTIONAL SWING WING SYSTEM

TAIL BRACE & HARDWARE - STD & 116 WING

#	DESCRIPTION	PART NUMBER	QUANTITY
1.	3/16" Quick Pin	PIN-3/16X.9	4
2.	Adjustable Tang *	ST-16	4
3.	1/2" x .035 x 7 1/2" Aluminum Tubing **	KAAC0029-4	2
4.	1/2" x .035 x 17" Aluminum Tubing **	KAAC0029-4	2
5.	3/16" Stainless Steel Pop Rivet - Cherry Q	CCPQ-62	8
6.	Skylight Support, Left	KPWI0321-L	1
7.	Skylight Support, Right	KPWI0321-R	1
8.	1/8" Aluminum Pop Rivet - Avex	1691-0410	6
9.	1/8" Primer Line, 2"	PRIMER LINE	1
10.	3/16" Quick Pin	PIN-3/16X1.2	2
11.	Adjustable Tang - Bent	ST-16-BENT	2

*Builder must modify, refer to text for instructions.

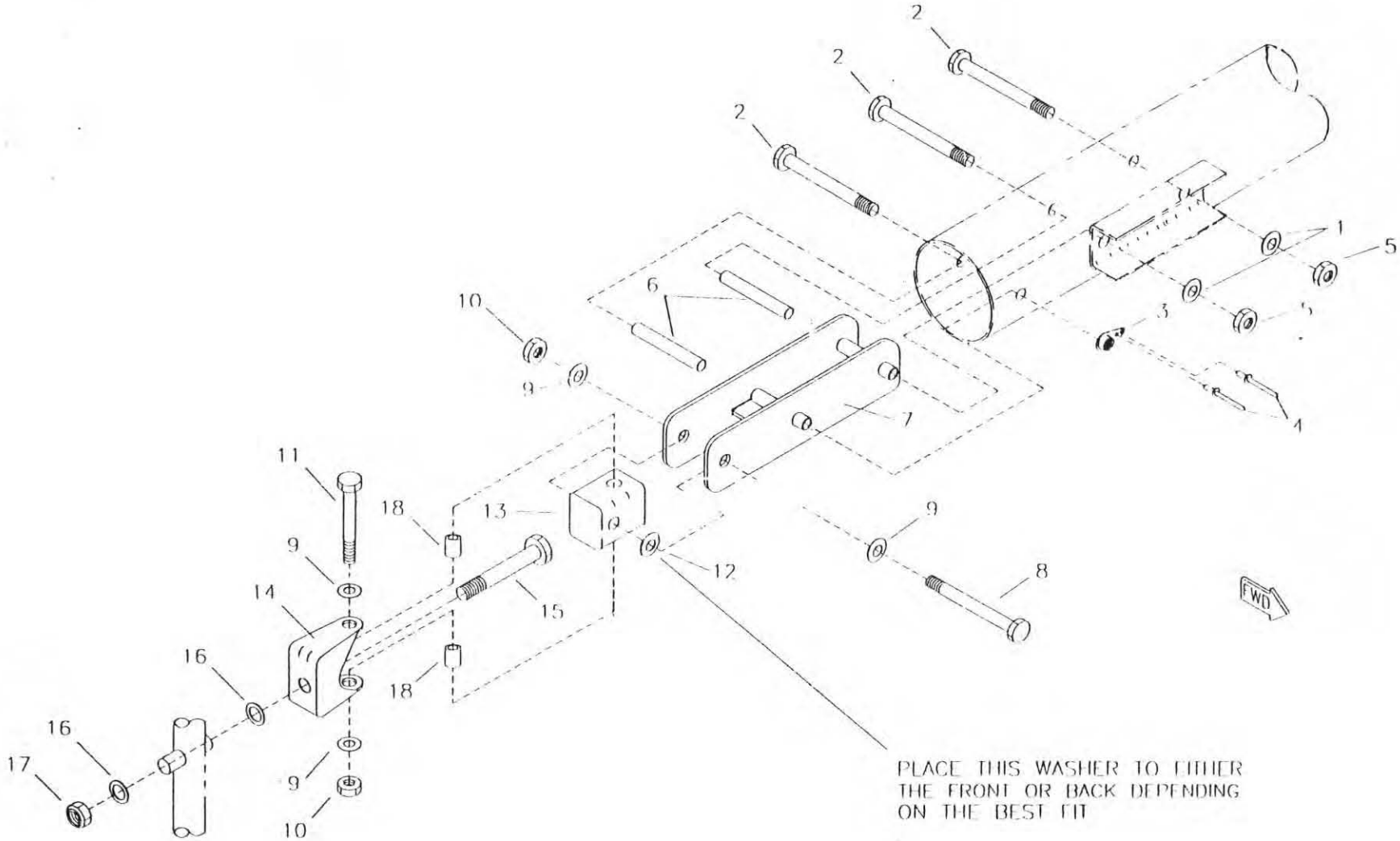

RAMS S-6ES STANDARD AND 116 WING
OPTIONAL SWING WING SYSTEM, UNIVERSAL HINGE

MD3669

S-6ES COYOTE II - OPTIONAL SWING WING SYSTEM

UNIVERSAL HINGE - STD & 116 WING

#	DESCRIPTION	PART NUMBER	QUANTITY
1.	3/16" Thin Washer *	AN960-10L	0
2.	3/16" Bolt *	AN3-23A	0
3.	3/16" Single Ear Nut Plate *	MS21051-L3	0
4.	3/32" Aluminum Pop Rivet *	40APR1/8	0
5.	3/16" Tensile Nut *	AN365-1032A	0
6.	Aluminum Bushing, 1/4" x .028 x 1 7/8" * , **	KAAC0004-4	0
7.	Trailing Edge Spar Root Fitting *	W-TES-RF	0
8.	1/4" Bolt *	AN4-16A	0
9.	1/4" Thick Washer *	AN960-416	0
10.	1/4" Shear Nut	AN364-428A	4
11.	1/4" Bolt	AN4-22A	2
12.	1/4" Thin Washer	AN960-416L	4
13.	Swing Wing Swivel Block	KPWI0271	2
14.	Stainless Steel U Bracket	KPWI0323	2
15.	5/16" Bolt *	AN5-20A	0
16.	5/16" Thick Washer *	AN960-516	0
17.	5/16" Tensile Nut *	AN365-524A	0
18.	Aluminum Bushing, 3/8" x .065 x 1/4" **	KAAC0029-1	0

*Reference Wing, supplied with Base Kit.
**Builder must fabricate from raw stock.

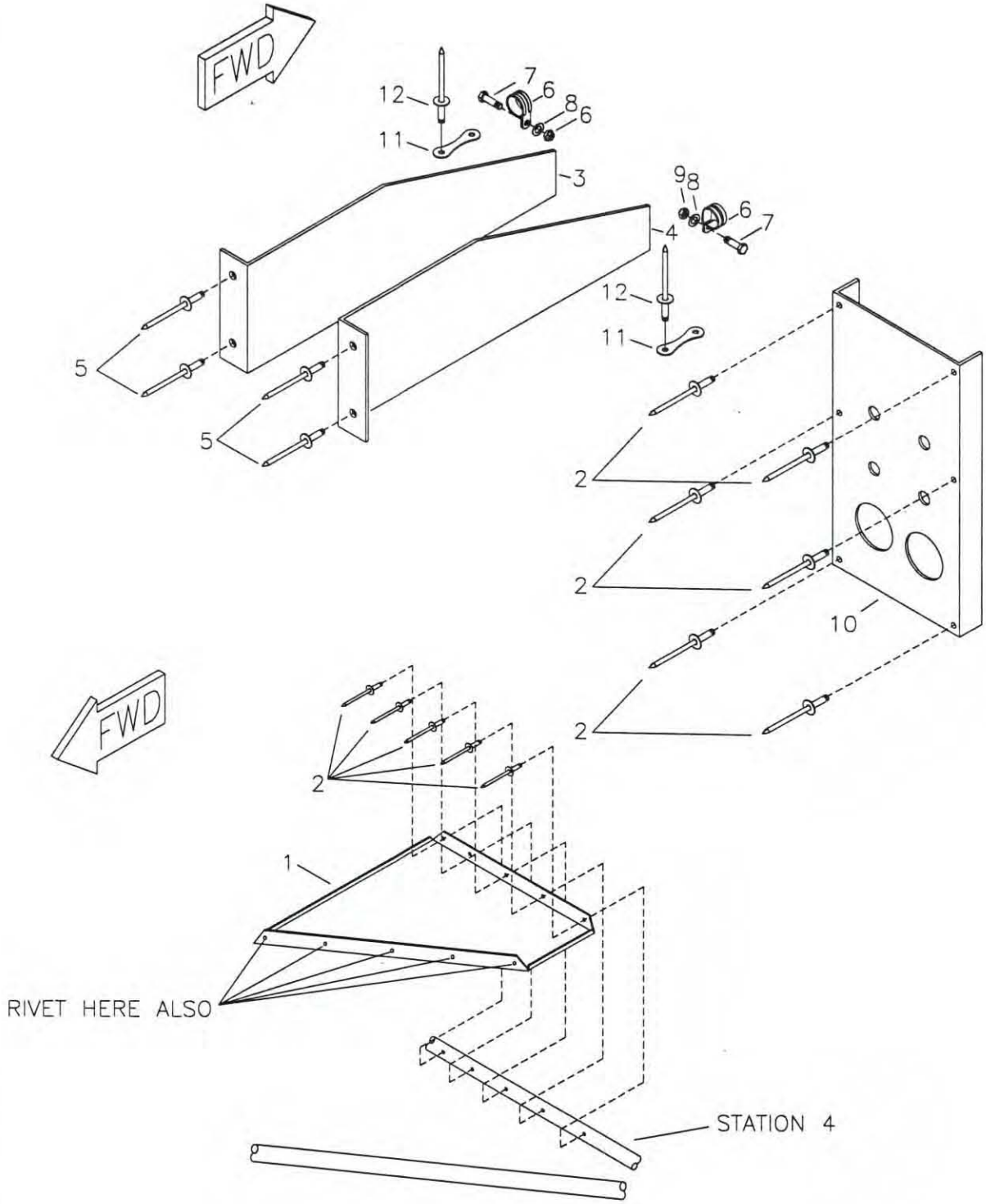

MD4267

RANS S-6ES COYOTE
OPTIONAL AVIONICS MOUNTS

S-6ES COYOTE II - OPTIONAL AVIONICS MOUNTS

#	DESCRIPTION	PART NUMBER	QUANTITY
1.	VHF Antenna Backing Plate	KPAV0001	1
2.	1/8" Aluminum Rivet	AAPQ-42	16
3.	Triple Radio Mount Plate-LH	KPAV0004-L	1
3.	Single Radio Mount Plate-LH	KPAV0002-L	1
3.	Double Radio Mount Plate-LH	KPAV0003-L	1
4.	Single Radio Mount Plate-RH	KPAV0002-R	1
4.	Double Radio Mount Plate-RH	KPAV0003-R	1
4.	Triple Radio Mount Plate-LH	KPAV0004-R	1
5.	1/8" Stainless Steel Rivet	CCPQ-42	4
6.	1/2" Cushion Clamp	MS21919-WDG8	2
7.	3/16" Bolt	AN3-3A	2
8.	3/16" Thin washer	AN960-10L	2
9.	3/16" Shear Nut	AN364-1032A	2
10.	Headset Jack Mount Plate	KPAV0017	1
11.	Hummer Tang	T12-HT6	2
12.	3/16" Stainless Steel Nut	CCPQ-62	2

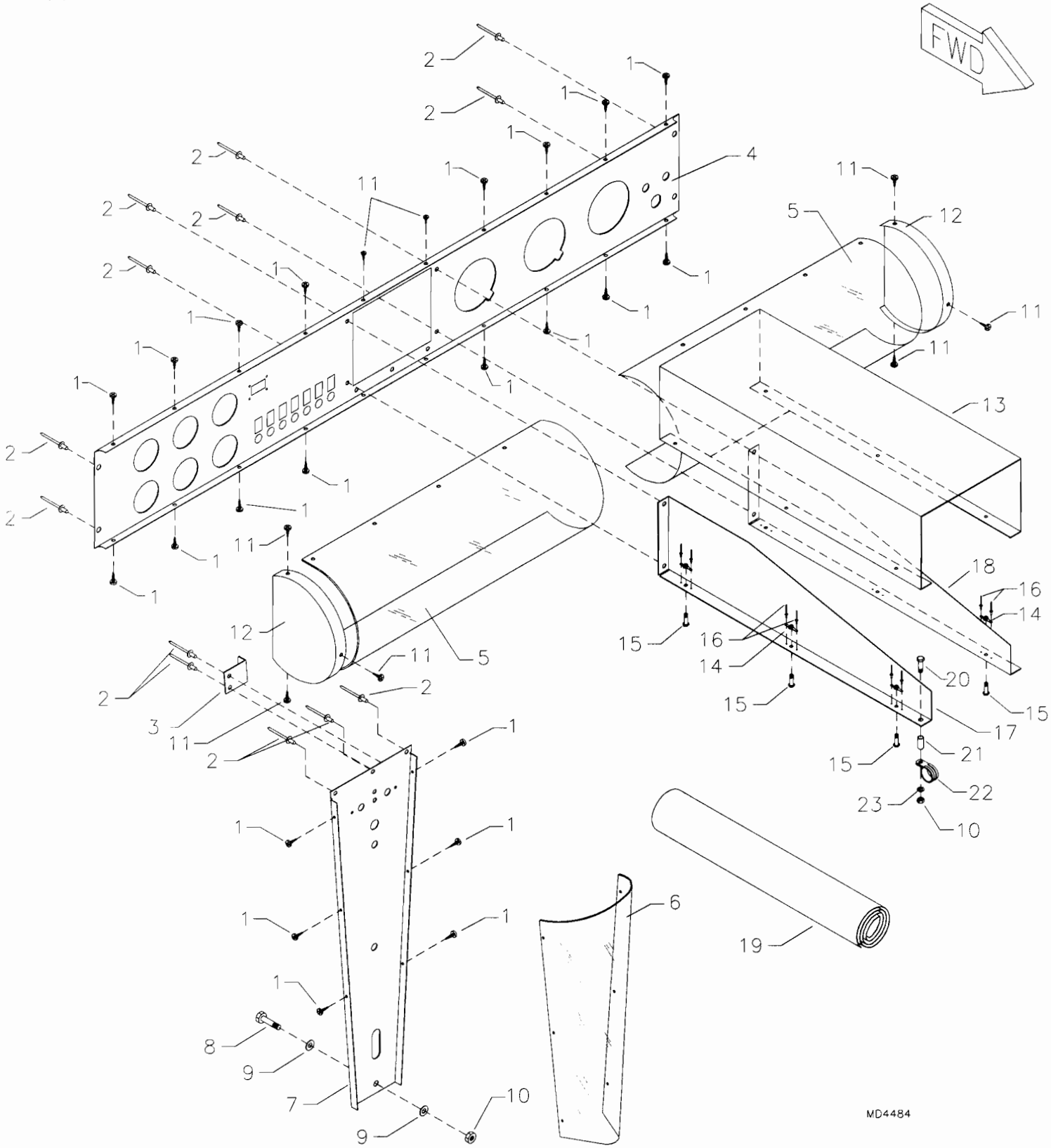

RANS S-6ES COYOTE II
OPTIONAL AVIONICS "T" INSTRUMENT PANEL ASSEMBLY

S-6ES COYOTE II - OPTIONAL AVIONICS "T" INSTRUMENT PANEL

#	DESCRIPTION	PART NUMBER	QUANTITY
1 .	#8 Pan Head Screw	8X1/2 PHS	22
2 .	1/8" Stainless Steel Pop Rivet - Cherry Q	CCPQ-42	13
3 .	Starter Handle Hook (503/582) Non-Electric Start	S2-SHH	1
4 .	Instrument Panel (Avionics)	KPIP0075	1
5 .	Instrument Panel Cover (Avionics)	KPIP0081	2
6 .	Dust Cover Lower (Avionics)	KPIP0078	1
7 .	Lower Panel (Avionics Panel Mount Trim)	KPIP0109	1
7 .	Lower Panel (Avionics - Bungee or Flap Mount Trim)	KPIP0076	1
8 .	3/16" Bolt	AN3-4A	1
9 .	3/16" Thick Washer	AN960-10	2
10 .	3/16" Shear Nut	AN364-1032A	3
11 .	#4 Thread Rolling Screw	PPP4-38Z	8
12 .	Dust Cover - End Cap	KPIP0082	2
13 .	Radio Cover	KPAV0018	1
14 .	8-32 Nut Plate	MS21047-08	6
15 .	Trusshead Machine Screw	AN526-832R8	6
16 .	3/32" Aluminum Pop Rivet	40APR1/8	12
17 .	Triple Radio Mount Plate - RH	KPAV0004-R	1
18 .	Triple Radio Mount Plate - LH	KPAV0004-L	1
19 .	Instrument Panel Cover Fabric	KPIP0083	1
20 .	3/16" Bolt	AN3-10A	2
21 .	Aluminum Bushing *	KPAC0060	1
22 .	1/2" Cushion Clamp	MS21919-WDG8	2
23 .	3/16" Thin Washer	AN960-10L	2

*Builder modifies.