The RANS CD manual is designed to be printable on 3-hole punched paper on your home printer. If you have the pre-printed manual, follow the directions for rotation below.

If you desire to NOT print the pages, you may use the features available with ADOBE Reader to rotate the pages on your computer screen.

After the manual pages are printed, rotate the Parts Drawing page 180° to face the Parts List page. See the diagram below.

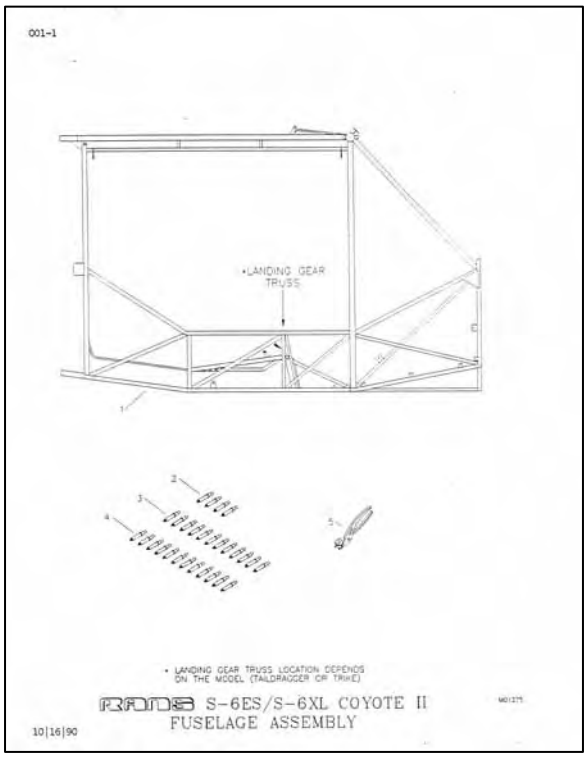

Parts Drawing page

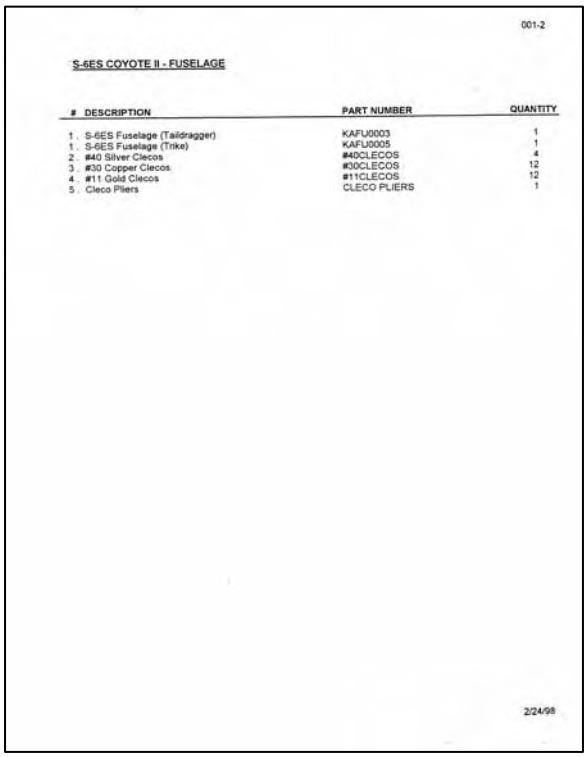

001-2

S-6ES COYOTE II - FUSELAGE

#	DESCRIPTION	PART NUMBER	QUANTITY
1	S-6ES Fuselage (Taildragger)	KAFU0003	1
1	S-6ES Fuselage (Trike)	KAFU0005	1
2	#40 Silver Clecos	#40CLECOS	4
3	#30 Copper Clecos	#30CLECOS	12
4	#11 Gold Clecos	#11CLECOS	12
5	Cleco Pliers	CLECO PLIERS	1

2/24/98

Parts List page

STEP 1:

PARTS MANUAL AS SHIPPED or PRINTED.
PLACE IN 3-RING BINDER TO SECURE.

PARTS DRAWING PAGE

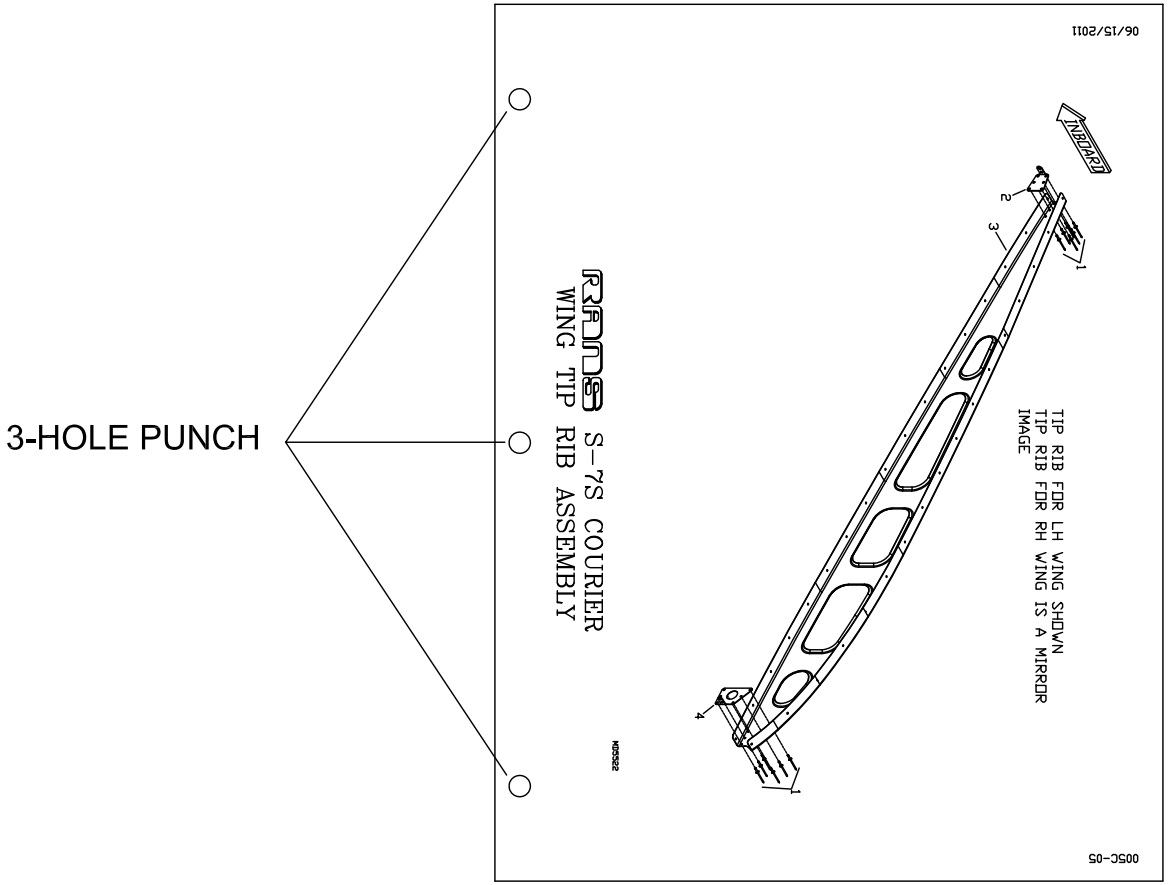

3-HOLE PUNCH

EXAMPLE ONLY.
MAY NOT REPRESENT ACTUAL PAGES
FROM YOUR MANUAL.

SEE NEXT PAGE

STEP 2:

OPEN 3-RING BINDER.
REMOVE PARTS DRAWING PAGE AND
ROTATE 180° TO FACE
CORRESPONDING
PARTS DESCRIPTION PAGE.
REPEAT FOR REMAINING PAGES

PARTS DRAWING PAGE

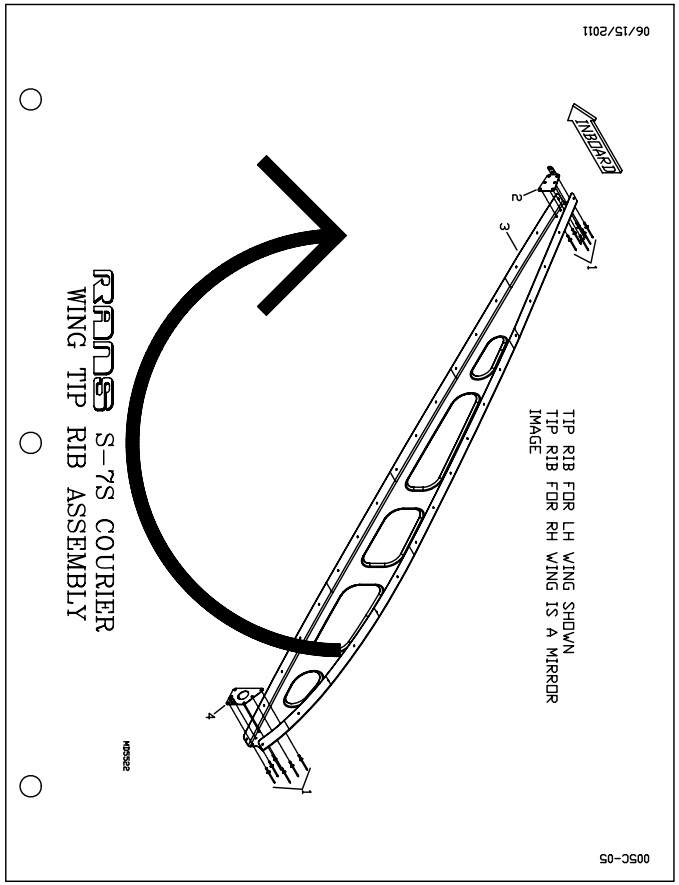

PARTS DESCRIPTION PAGE

PAGE 005C-06

S-7S COURIER - WING - TIP RIB ASSEMBLY

# DESCRIPTION	PART NUMBER	QUANTITY
1. 1/8" ALUMINUM RIVET	AAPQ-41	24
2. RIB CLIP TRAILING EDGE - LH	KPWI0372-L	4
2. RIB CLIP TRAILING EDGE - RH	KPWI0372-R	1
3. WING TIP RIB - LH	KPWI0544-L	1
3. WING TIP RIB - RH	KPWI0544-R	1
4. RIB CLIP LEADING EDGE - LH	KPWI0373-L	1
4. RIB CLIP LEADING EDGE - RH	KPWI0373-R	1

6/15/2011

EXAMPLE ONLY.
MAY NOT REPRESENT ACTUAL PAGES
FROM YOUR MANUAL.

SEE NEXT PAGE

STEP 3:

PARTS DRAWING PAGE
FACES CORRESPONDING
PARTS DESCRIPTION PAGE
WHEN FINAL SECURED IN
BINDER

PARTS DRAWING PAGE

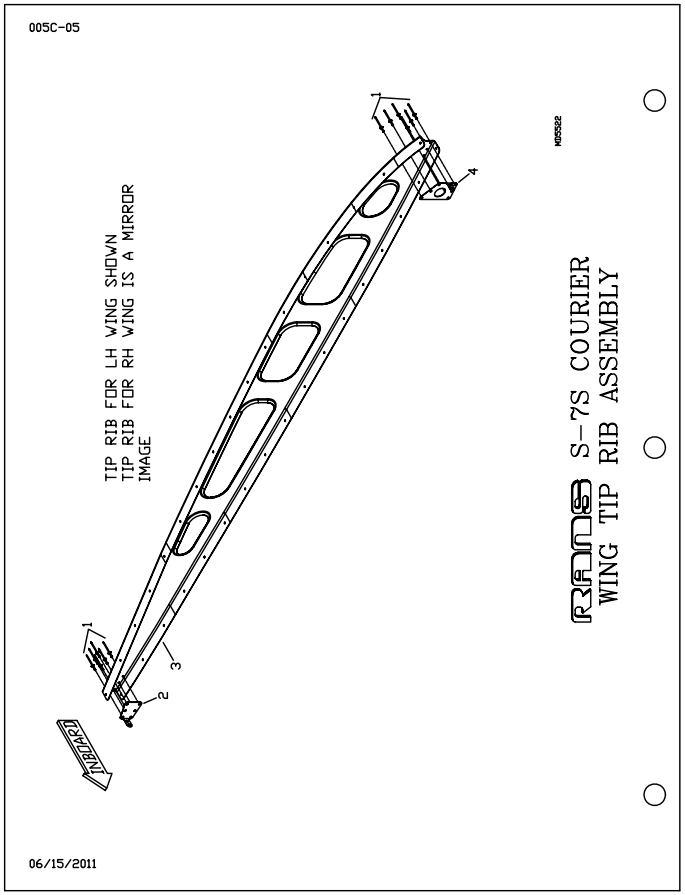

PARTS DESCRIPTION PAGE

PAGE 005C-06

S-7S COURIER - WING - TIP RIB ASSEMBLY

#	DESCRIPTION	PART NUMBER	QUANTITY
1.	1/8" ALUMINUM RIVET	AAPQ-41	24
2.	RIB CLIP TRAILING EDGE - LH	KPWI0372-L	4
2.	RIB CLIP TRAILING EDGE - RH	KPWI0372-R	1
3.	WING TIP RIB - LH	KPWI0544-L	1
3.	WING TIP RIB - RH	KPWI0544-R	1
4.	RIB CLIP LEADING EDGE - LH	KPWI0373-L	1
4.	RIB CLIP LEADING EDGE - RH	KPWI0373-R	1

6/15/2011

EXAMPLE ONLY.
MAY NOT REPRESENT ACTUAL PAGES
FROM YOUR MANUAL.

S-6S COYOTE II

PARTS MANUAL - TABLE OF CONTENTS

System	Section
General Information	00
Fuselage	01
Main Gear	02
Nose Gear	03
Tailwheel	03A
Floorboard/Brakes/Rudder Pedals	04
Firewall	05
Engine Mount	06
Tailcone	07
Control Stick	08
Interior	09
Door	010
Windshield	011
Battery Box	012
Seat/Seat Belt	013
Tail	014
Sport Wing Assembly	015
Jury Strut & Trial Assembly	016
Covering	017
Painting	018
Final Assembly	019
Options	020

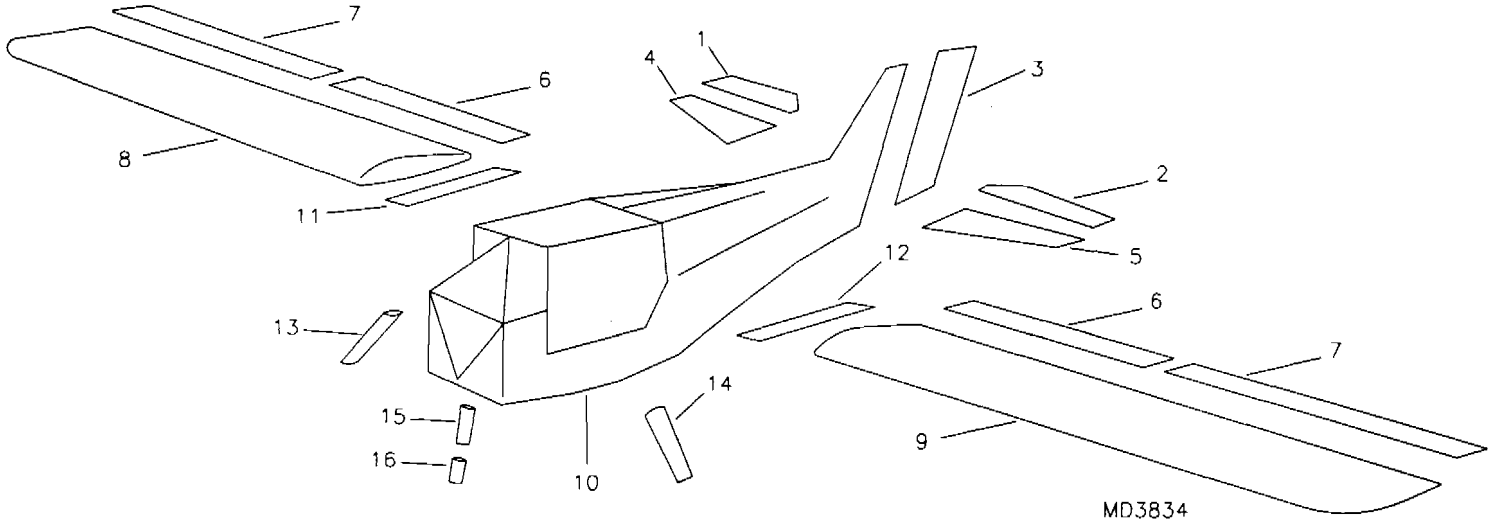

RANS S-6S COYOTE II
QUICK BUILD OPTIONS

S-6S COYOTE II - QUICK BUILD OPTIONS

#	DESCRIPTION	PART NUMBER	QUANTITY
1.	Elevator Assembly RH - Quick Build	KAEL0011	1
2.	Elevator Assembly LH - Quick Build	KAEL0012	1
3.	Rudder Assembly - Quick Build	KARD0012	1
4.	Horiz. Stab. RH - Quick Build	KAHS0024	1
5.	Horiz. Stab. LH - Quick Build	KAHS0025	1
6.	Flap Assembly (STD Wing) - Quick Build	KAFL0007	2
6.	Flap Assembly (116 Wing) - Quick Build	KAFL0009	2
7.	Aileron Assembly (STD Wing) - Quick Build	KAAL0003	2
7.	Aileron Assembly (116 Wing) - Quick Build	KAAL0005	2
8.	Wing Assembly RH (116 Wing) - Quick Build	KAWI0019	1
9.	Wing Assembly LH (116 Wing) - Quick Build	KAWI0020	1
9.	Wing Assembly LH (STD Wing) - Quick Build	KAWI0016	1
10.	Fuselage Assembly TR - Quick Build	KAFU0034	1
10.	Fuselage Assembly TD - Quick Build	KAFU0033	1
11.	Bottom Wing Root Seal, RH	KPWI0012-R	1
12.	Bottom Wing Root Seal, LH	KPWI0012-L	1
13.	Gear Leg Fairing, Unpainted - RH (Trike) * , **	KPMG0070-R	1
13.	Fairing - RH (Taildragger) * , **	KPMG0069-R	1
14.	Gear Leg Fairing, Unpainted - LH (Trike) * , **	KPMG0070-L	1
14.	Fairing - LH (Taildragger) * , **	KPMG0069-L	1
15.	Nose Gear Fairing Top - Quick Build **	KANG0015	1
16.	Nose Gear Fairing Bottom - Quick Build **	KANG0016	1

*Referenced.
**Optional.

S-6S COYOTE II - GENERAL INFORMATION

#	DESCRIPTION	PART NUMBER	QUANTITY
1.	Flight Log	FLIGHT LOG	1
2.	Maintenance Log Book	MAINTENANCE LOG	1
3.	Assembly Manual	ASSEMBLY MANUAL	1
4.	Experimental Decal Sheets	EXPER-DECAL	1
5.	Range Decals	RANGE DECAL	1
6.	1/2" x .058 x 4" Anodized Aluminum Tubing *	KAAC0004-9	1
6.	Raw Stock Kit	KAAC0004	1
6.	1/2" x .020 x 28" Aluminum Sheet *	KAAC0004-1	2
6.	7/8" x .058 x 144" Anodized Aluminum Tubing *	KAAC0004-2	1
6.	3/4" x .058 x 12" Anodized Aluminum Tubing *	KAAC0004-3	1
6.	1/4" x .028 x 36" Anodized Aluminum Tubing *	KAAC0004-4	1
6.	1/8" x 3' Stainless Steel Rod *	KAAC0004-5	1
6.	1/2" x 12" Nylon Tubing (KSAC0039) *	KAAC0004-8	1
6.	1/2" x .035 x 12' Anodized Aluminum Tubing *	KAAC0004-10	4
6.	1/2" x .028 x 15' Anodized Aluminum Tubing *	KAAC0004-11	1
6.	3/8" x .095 x 8" Anodized Aluminum Tubing *	KAAC0004-13	1
6.	3/8" x .058 x 12" Anodized Aluminum Tubing *	KAAC0004-6	1
7.	Safety Wire	SAFETY WIRE	1
8.	Warning Label	KPPL0001	1
9.	RANS Decal - Black **	RANS DECAL-B	0
9.	RANS Decal - White **	RANS DECAL-W	0
10.	S-6 Cowling Decal - Black **	S-6 COWL DECAL-B	0
10.	S-6 Cowling Decal - White **	S-6 COWL DECAL-W	0
11.	S-6 Rudder Decal - White **	S-6 RUDDER DECAL-W	0
11.	S-6 Rudder Decal - Black **	S-6 RUDDER DECAL-B	0

*Supplied in Raw Stock Kit.
**May be purchased separately, call the Parts Dept for pricing.

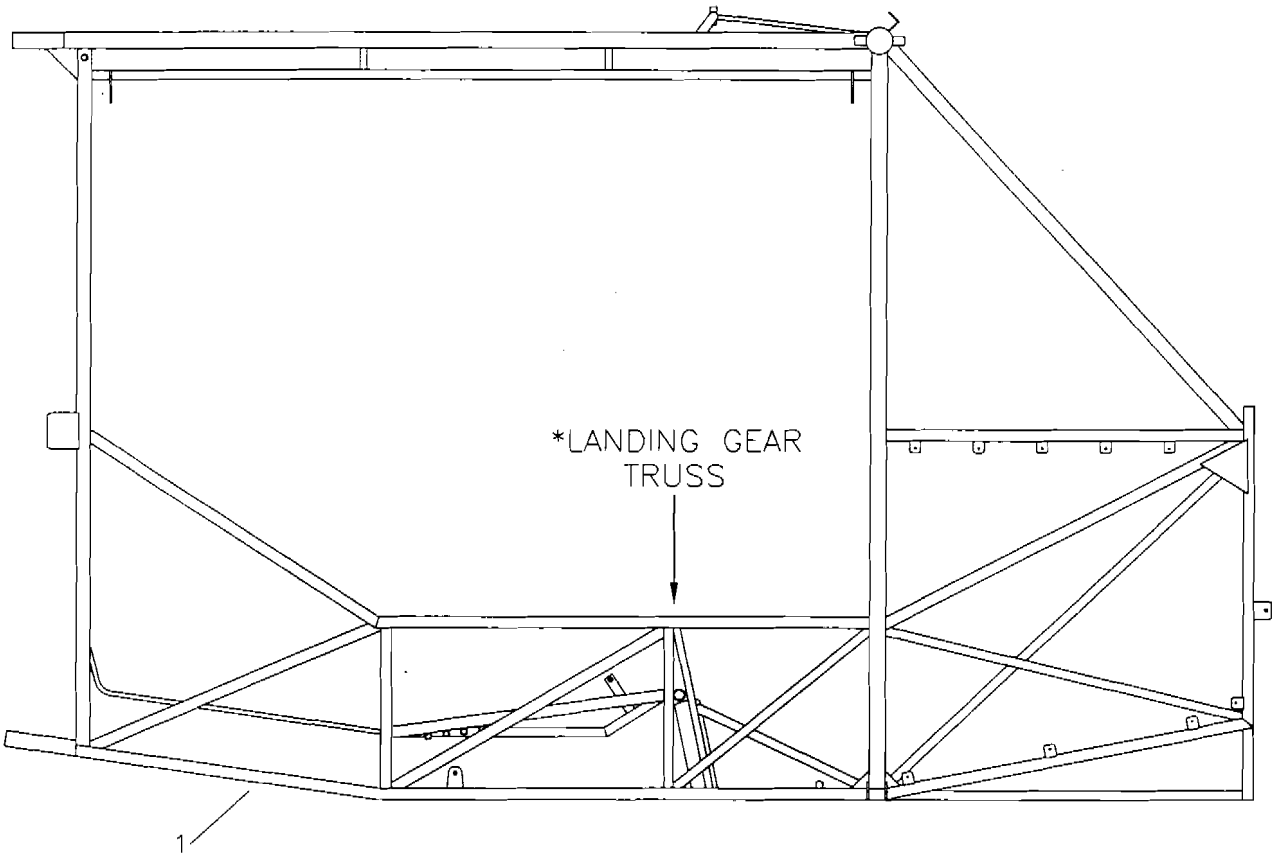

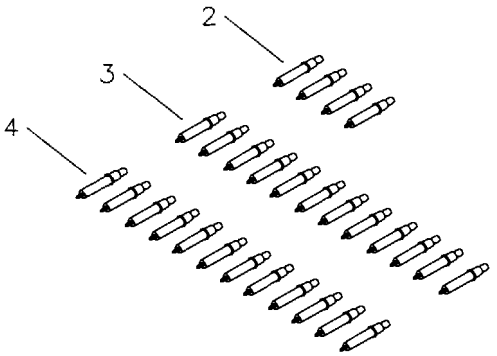

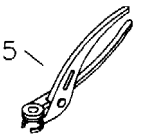

* LANDING GEAR TRUSS LOCATION DEPENDS ON THE MODEL (TAILDRAGGER OR TRIKE)

RANS S-6S COYOTE II FUSELAGE ASSEMBLY

MD1331

S-6S COYOTE II - FUSELAGE

#	DESCRIPTION	PART NUMBER	QUANTITY
1.	Fuselage (Taildragger)	KAFU0004	1
1.	Fuselage (Trike)	KAFU0006	1
2.	#40 Silver Clecos	#40CLECOS	4
3.	#30 Copper Clecos	#30CLECOS	12
4.	#11 Gold Clecos	#11CLECOS	12
5.	Cleco Pliers	CLECO PLIERS	1

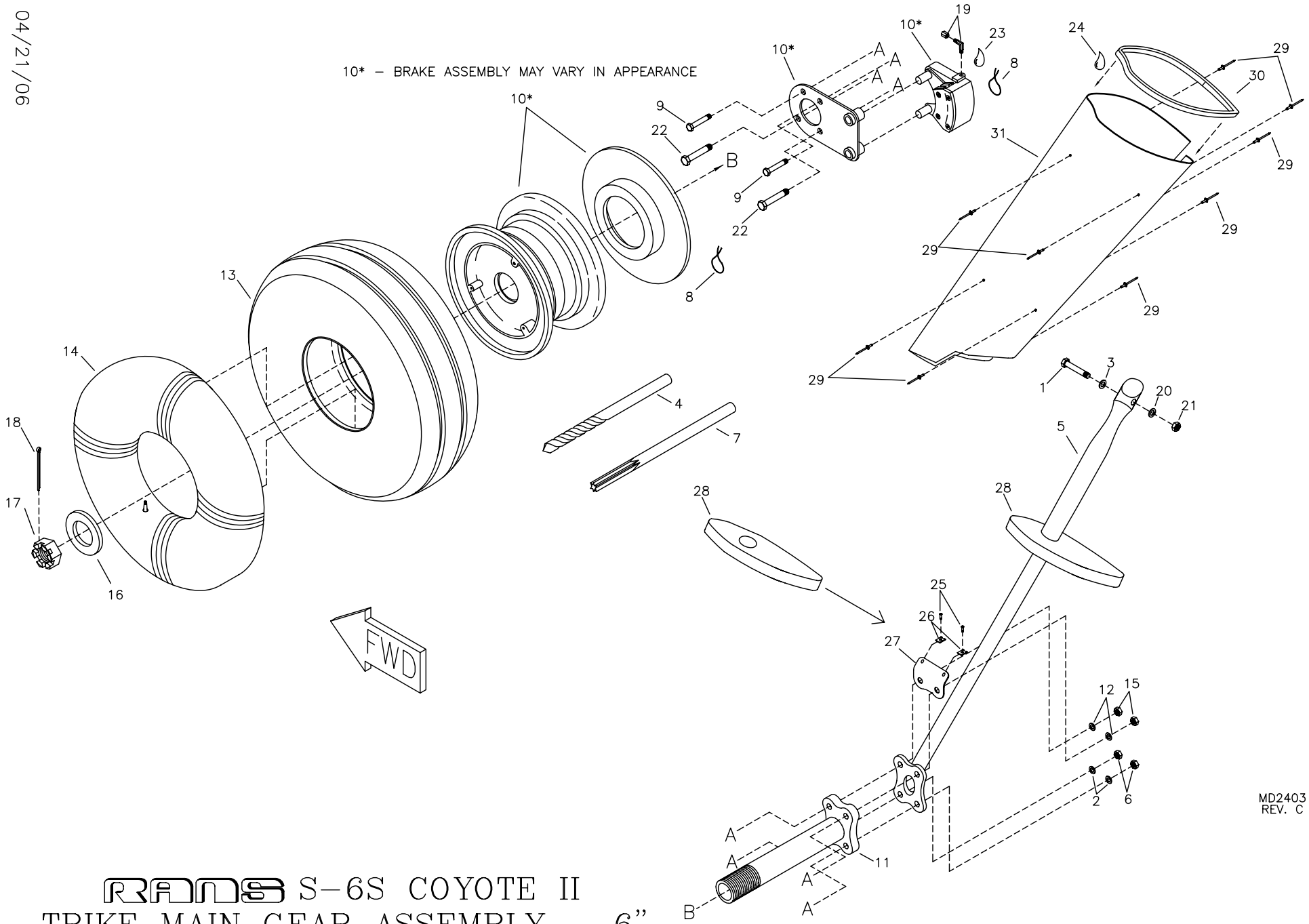

RANS S-6S COYOTE II
TRIKE MAIN GEAR ASSEMBLY – 6”

S-6S COYOTE II - TRIKE MAIN GEAR ASSEMBLY - 6"

#	DESCRIPTION	PART NUMBER	QUANTITY
1.	1/4" Bolt - Close Tolerance	NAS6604-23	2
2.	3/8" Thick Washer	AN960-616	4
3.	1/4" Thin Washer	AN960-416L	2
4.	6.2mm Drill Bit	KPAC0205	1
5.	Gear Leg	KPMG0197	2
6.	3/8" Tensile Nut	AN365-624A	4
7.	Reamer - 0.249	KPAC0204	1
8.	Safety Wire **	-----	0
9.	5/16" Bolt	AN5-16A	4
10.	Hydraulic Brake Assembly, 6"	KSBS0030	2
11.	Axle *	-----	0
12.	5/16" Thin Washer	AN960-516L	4
13.	Tire, 6"	KSMG0013	2
14.	Tire Tube, 6"	KSMG0016	2
15.	5/16" Tensile Nut	AN365-524A	4
16.	Washer *	-----	0
17.	Castle Nut *	-----	0
18.	Cotter Pin *	-----	0
19.	90 Fitting	KSBS0001	2
20.	1/4" Thick Washer	AN960-416	2
21.	1/4" Shear Nut	AN364-428A	2
22.	3/8" Bolt	AN6-17A	4
23.	Thread Sealant **	-----	0
24.	Adhesive Super Glue **	-----	
25.	#8 Pan Head Screw	8X1/2 PHS	4
26.	Tinnerman	A1789-8Z-1	4
27.	Main Gear Fairing Lower Bracket - RH	KPMG0127-R	1
27.	Main Gear Fairing Lower Bracket - LH	KPMG0127-L	1
28.	Fairing Rib - Main Gear (Trike)	KPMG0091	4
29.	3/32" Aluminum Pop Rivet	40APR1/8	30
30.	Edge Trim	X1011	3 ft
31.	Gear Leg Fairing - RH (Trike)	KPMG0152-R	1
31.	Gear Leg Fairing - LH (Trike)	KPMG0152-L	1

*Supplied pre-assembled to KSBS0030.
**Builder Supplied

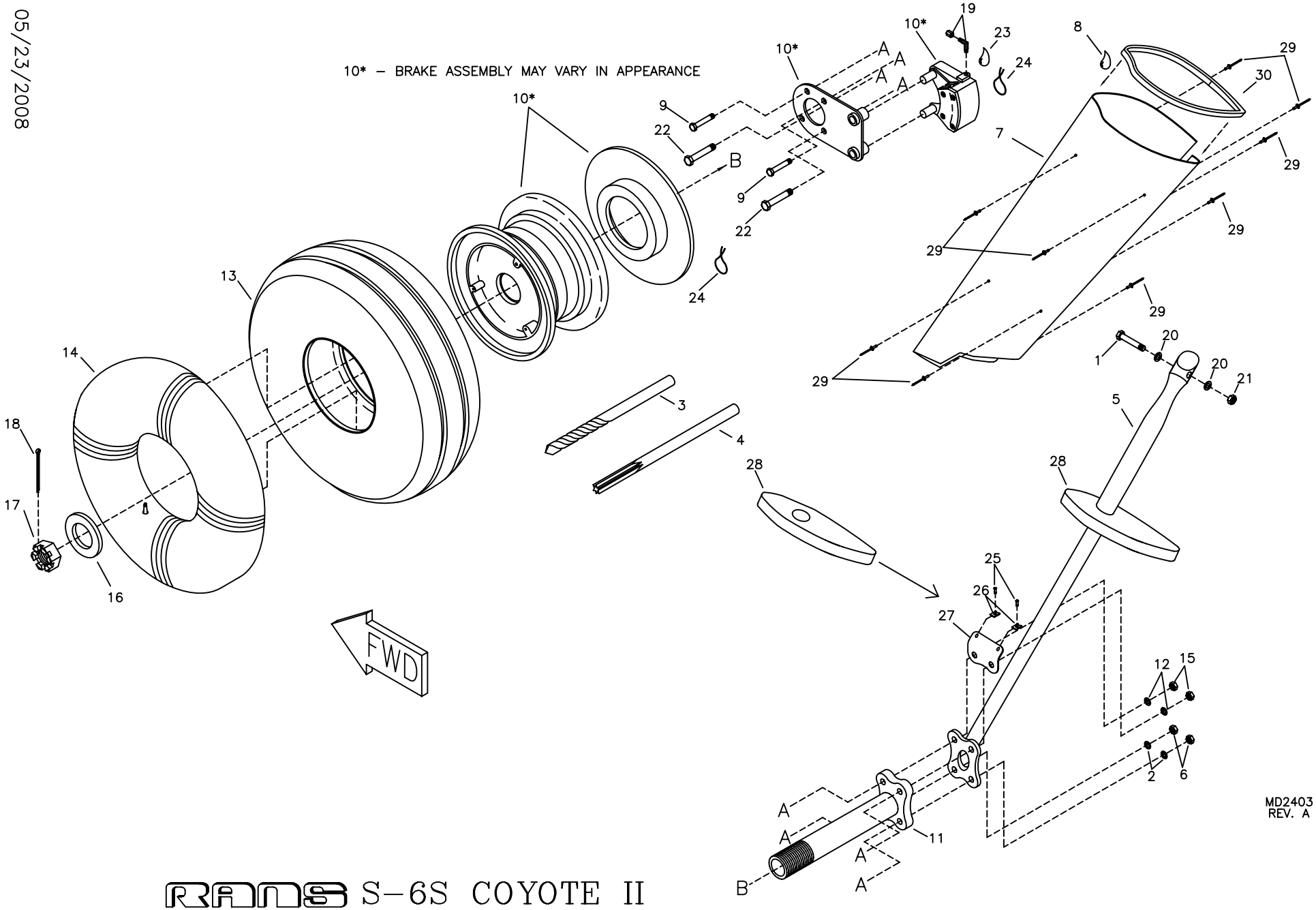

RANS S-6S COYOTE II
TAILDRAGGER MAIN GEAR ASSEMBLY – 6”

S-6S COYOTE II - TAILDRAGGER MAIN GEAR ASSEMBLY - 6"

#	DESCRIPTION	PART NUMBER	QUANTITY
1 .	1/4" Bolt - Close Tolerance	NAS6604-23	2
2 .	3/8" Thick Washer	AN960-616	4
3 .	6.2mm Drill Bit	KPAC0205	1
4 .	Reamer - 0.249"	KPAC0204	1
5 .	Gear Leg	KAMG0013	2
6 .	3/8" Tensile Nut	AN365-624A	4
7 .	Gear Leg Fairing - LH (Taildragger)	KPMG0147-L	1
7 .	Gear Leg Fairing - RH (Taildragger)	KPMG0147-R	1
8 .	Adhesive Super Glue **	-----	0
9 .	5/16" Bolt	AN5-16A	4
10 .	Hydraulic Brake Assembly, 6"	KSBS0030	2
11 .	Axle *	-----	0
12 .	5/16" Thin Washer	AN960-516L	4
13 .	Tire, 6"	KSMG0013	2
14 .	Tire Tube, 6"	KSMG0016	2
15 .	5/16" Tensile Nut	AN365-524A	4
16 .	Washer *	-----	0
17 .	Castle Nut *	-----	0
18 .	Cotter Pin *	-----	0
19 .	90 Fitting	KSBS0001	2
20 .	1/4" Thick Washer	AN960-416	4
21 .	1/4" Shear Nut	AN364-428A	2
22 .	3/8" Bolt	AN6-17A	4
23 .	Thread Sealant **	-----	0
24 .	Safety Wire **	-----	0
25 .	#8 Pan Head Screw	8X1/2 PHS	4
26 .	Tinnerman	A1789-8Z-1	4
27 .	Main Gear Fairing Lower Bracket - RH	KPMG0127-R	1
27 .	Main Gear Fairing Lower Bracket - LH	KPMG0127-L	1
28 .	Fairing Rib - Main Gear (Taildragger)	KPMG0126	2
29 .	3/32" Aluminum Pop Rivet	40APR1/8	22
30 .	Edge Trim	X1011	3 ft
31 .	5/16" Thick Washer	AN960-516	8

NOTE: Tundra tire options inflate to 9lbs maximum.
*Supplied pre-assembled to KSBS0030.
**Builder supplied.

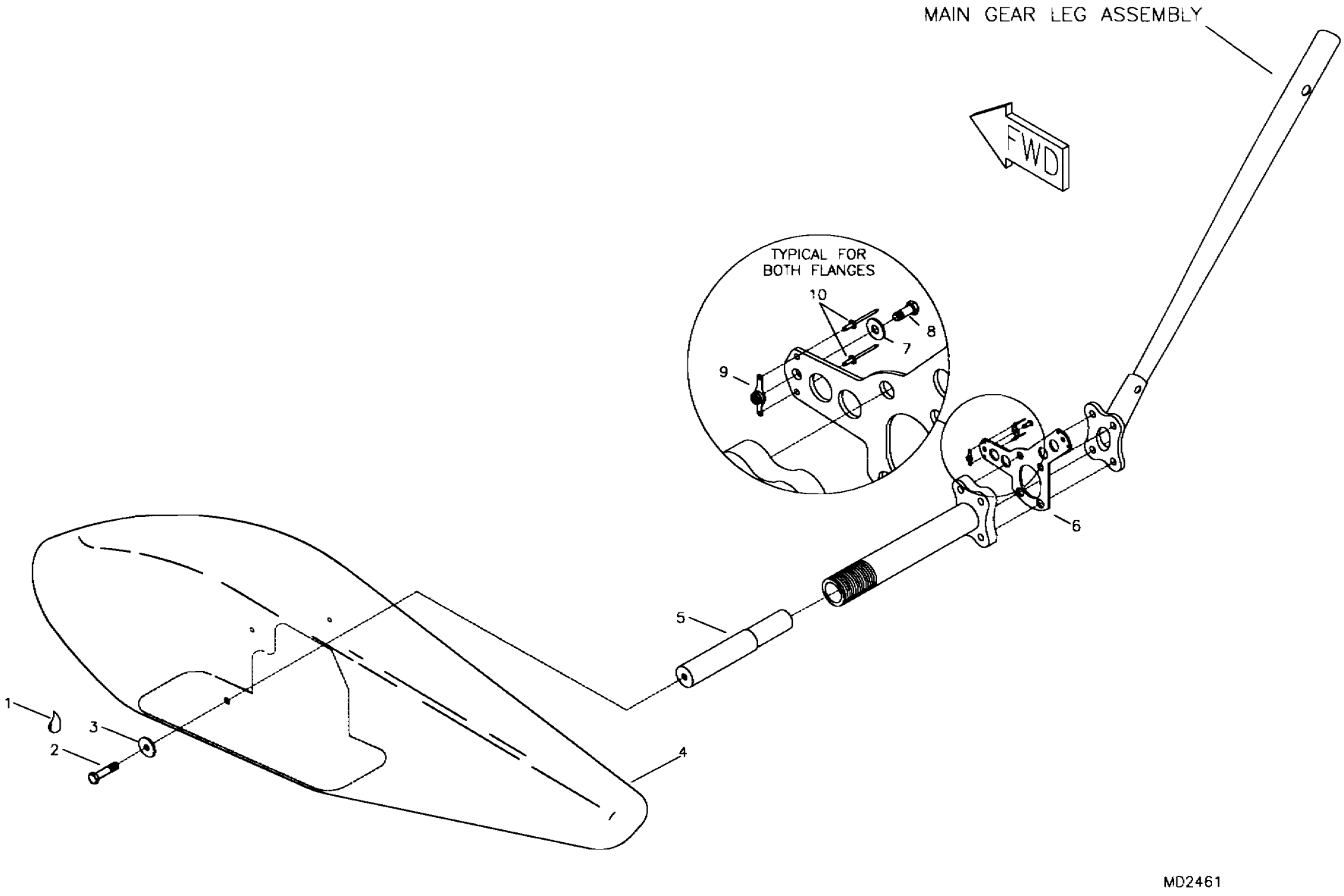

RANS S-6S COYOTE II
OPTIONAL MAIN WHEEL PANT ASSEMBLY

S-6S COYOTE II - OPTIONAL MAIN WHEEL PANTS FOR STD 6" HYDRAULIC BRAKES

#	DESCRIPTION	PART NUMBER	QUANTITY
1.	Loctite Blue	LOC-TITE	0
2.	1/4" Bolt	AN4-4A	2
3.	1/4" Large Washer	AN970-4	2
4.	Main Wheel Pant - 6"	KPMG0105	2
5.	Wheel Axle Extender - 6"	KPMG0171	2
6.	Wheel Pant Mount Plate	KPMG0162	2
7.	3/16" Thick Washer	AN960-10	4
8.	3/16" Bolt	AN3-3A	4
9.	3/16" Nut Plate	K-1000-3	4
10.	3/32" Aluminum Pop Rivet	40APR1/4	8

*Builder must fabricate from raw stock.

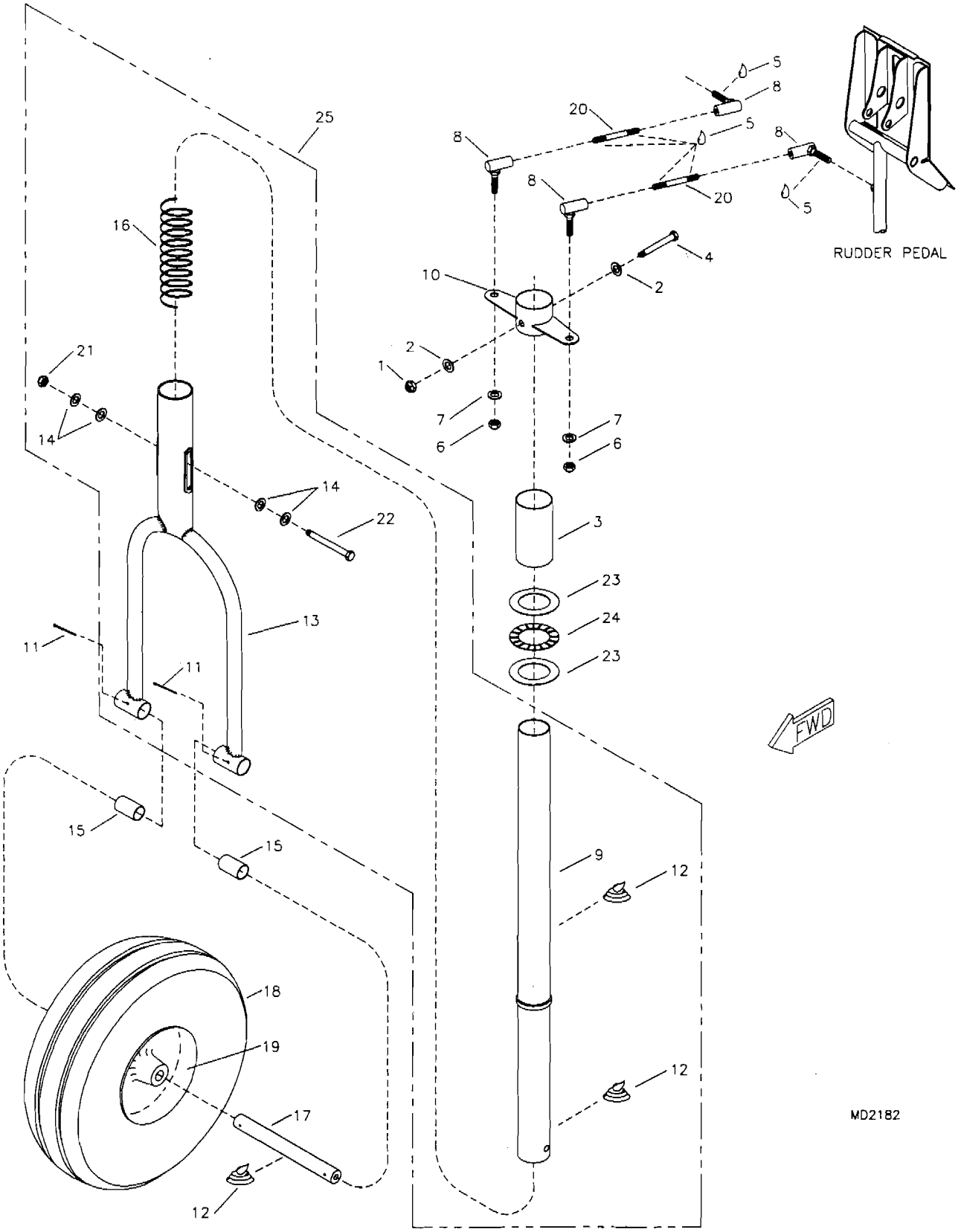

RANS S-6S COYOTE II
NOSE GEAR ASSEMBLY

S-6S COYOTE II - NOSE GEAR

#	DESCRIPTION	PART NUMBER	QUANTITY
1.	3/16" Shear Nut	AN364-1032A	1
2.	3/16" Thin Washer	AN960-10L	2
3.	Stop Ring	KPNG0027	1
4.	3/16" Bolt	AN3-20A	1
5.	Loctite Blue	LOC-TITE	1
6.	1/4" Shear Nut	AN364-428A	2
7.	1/4" Thin Washer	AN960-416L	2
8.	Steering Rod Linkage	NG-SL	4
9.	Nose Gear Strut *	KPNG0076	0
10.	Steer Horn	KPNG0020	1
11.	Large Cotter Pin	MS24665-285	2
12.	Grease	-----	0
13.	Fork *	KPNG0073	0
14.	1/4" Plastic Washer *	PW-4	0
15.	Aluminum Bushing, 3/4" x .058 x X **	KAAC0004-3	0
16.	Spring *	4259	0
17.	Nose Gear Axle	KPNG0074	1
18.	Aero-Trainer Tire, 5"	KSMG0005	1
18.	Aero-Trainer Tire Tube, 5"	KSMG0007	1
19.	Hegar Nosewheel Hub Kit	LG-NW-HUB	1
19.	5" Hegar Nosewheel Rim Kit	LG-NW-RIM-5	1
20.	Steer Rod, 2 7/8"	KPNG0017	2
21.	1/4" Shear Nut *	AN364-428A	0
22.	1/4" Bolt *	AN4-24A	0
23.	Bearing Washer	TRA2435	2
24.	Thrust Bearing	NTA2435	1
25.	Nose Gear Strut/Fork Assembly	KANG0014	1

*Supplied with Strut Assembly (KANG0014).
**Builder must fabricate from raw stock.

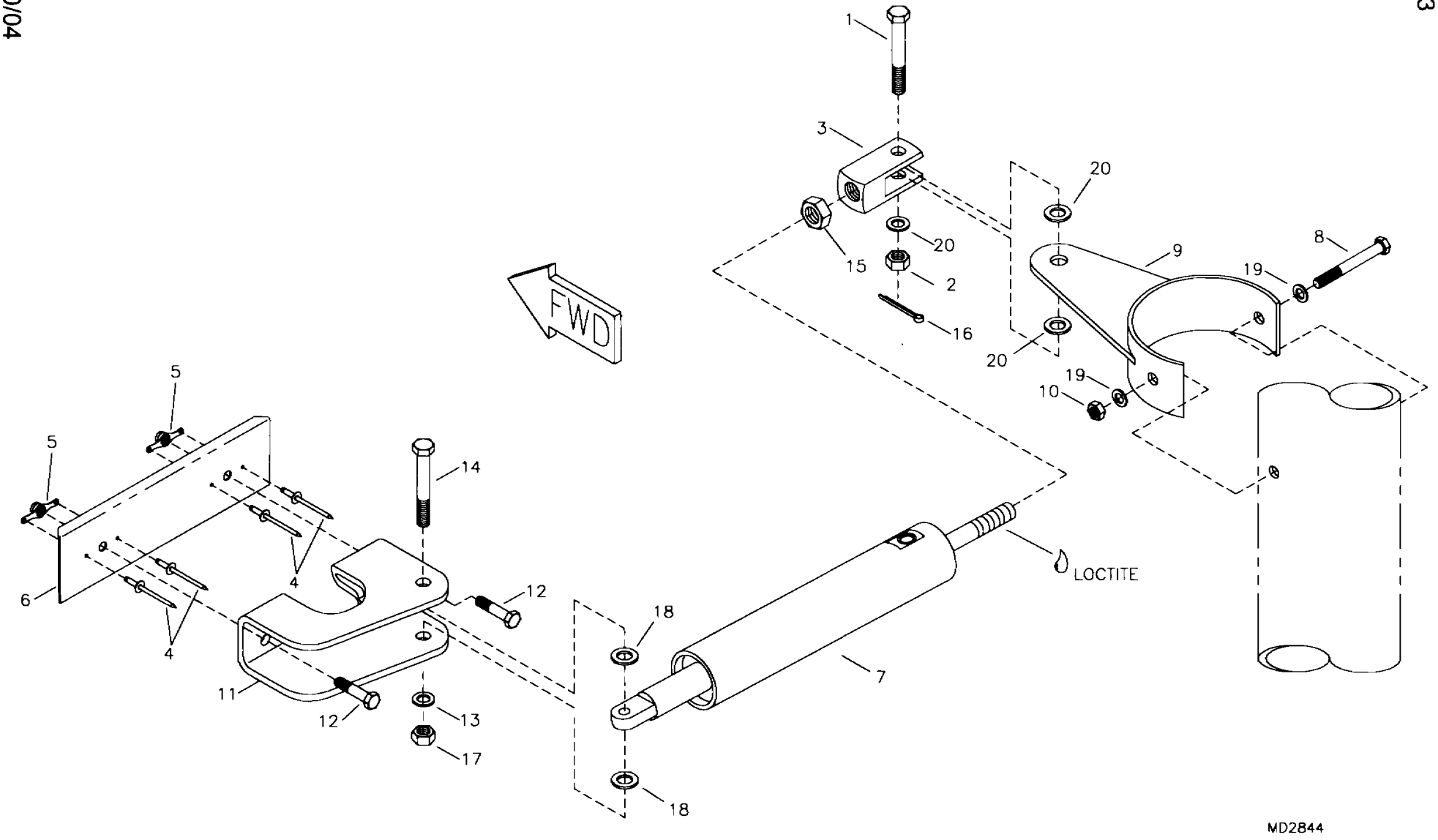

RANS S-6S COYOTE II TRIKE
OPTIONAL NOSE GEAR SHIMMY DAMPENER

S-6S COYOTE II - OPTIONAL TRIKE NOSE GEAR SHIMMY DAMPENER

#	DESCRIPTION	PART NUMBER	QUANTITY
1.	3/16" Bolt	AN3-7	1
2.	3/16" Castle Nut	AN310-3	1
3.	Clevis *	-----	0
4.	3/32" Aluminum Pop Rivet	40APR1/8	4
5.	3/16" Nut Plate	K-1000-3	2
6.	Shimmy Damper Backing Plate	KPNG0047	1
7.	Shimmy Damper	KSAC0024	1
8.	3/16" Bolt	AN3-20A	1
9.	Shimmy Damper Horn - Nose Gear	KPNG0046	1
10.	3/16" Shear Nut	AN364-1032A	1
11.	Shimmy Damper Mount - Nose Gear	KPNG0045	1
12.	3/16" Bolt	AN3-3A	2
13.	1/4" Thin Washer	AN960-416L	1
14.	1/4" Bolt	AN4-10A	1
15.	Jam Nut *	-----	0
16.	Small Cotter Pin	MS24665-134	1
17.	1/4" Shear Nut	AN364-428A	1
18.	1/4" Plastic Washer	PW-4	2
19.	3/16" Thin Washer	AN960-10L	2
20.	3/16" Thick Washer	AN960-10	3

*Supplied with shimmy dampner.

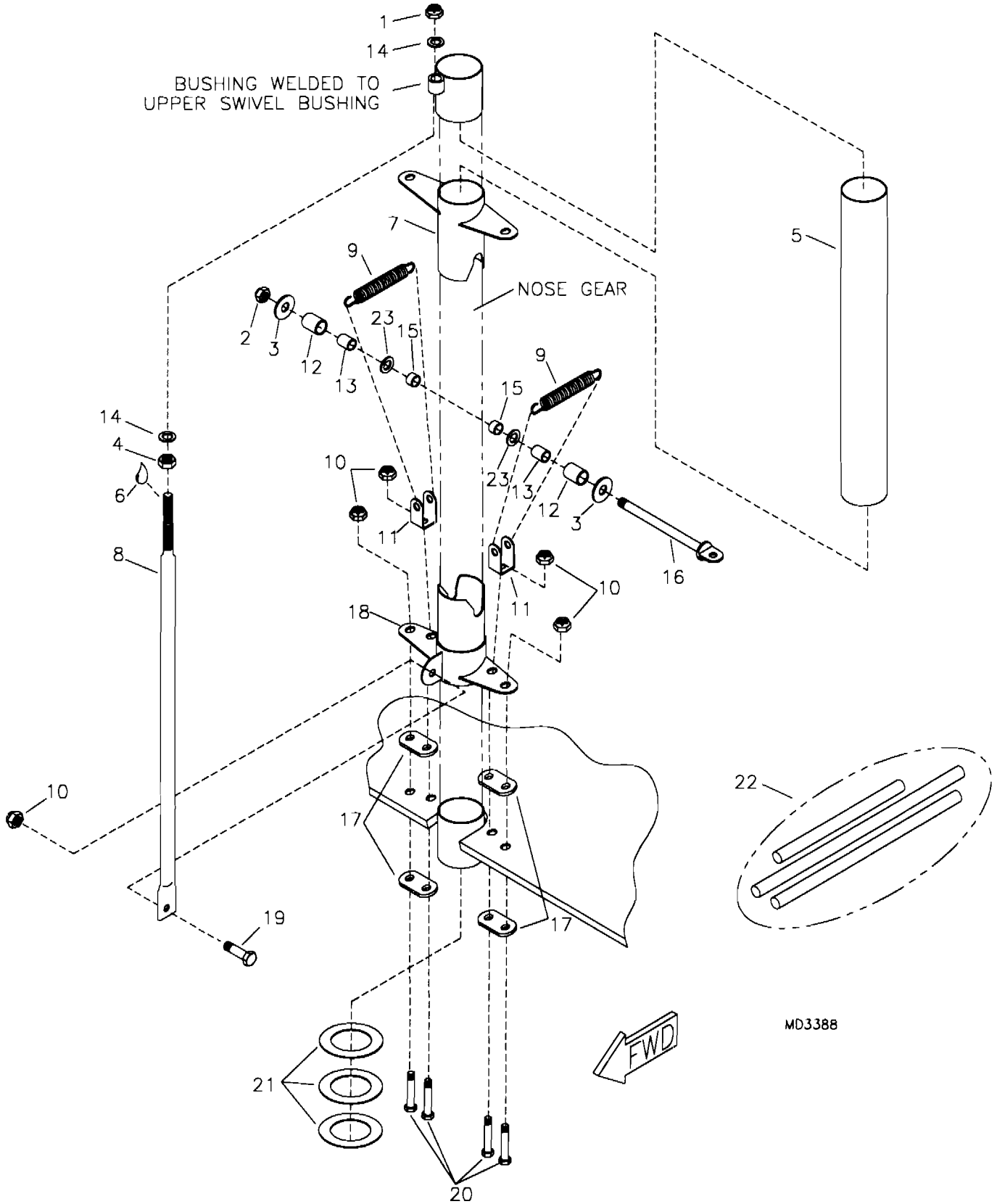

RANS S-6S COYOTE II
OPTIONAL NOSE GEAR DISCONNECT

S-6S COYOTE II - OPTIONAL NOSE GEAR DISCONNECT

#	DESCRIPTION	PART NUMBER	QUANTITY
1.	1/4" Shear Nut	AN364-428A	1
2.	5/16" Shear Nut	AN364-528A	1
3.	1/4" Large Washer	AN970-4	4
4.	1/4" Plain Nut	AN345-416	1
5.	Sleeve - Nose Gear	KPNG0068	1
6.	Loctite Blue	LOC-TITE	0
7.	Steer Cam	KPNG0065	1
8.	Keep Rod	KPNG0066	1
9.	Spring	C-5125	2
10.	3/16" Shear Nut	AN364-1032A	5
11.	Shackle	RL-205-T	2
12.	Aluminum Bushing, 1/2" x .058 x 3/8" *	KAAC0024-1	0
13.	Steel Bushing, 3/8" x .028 x 7/16" *	KAAC0024-2	0
14.	1/4" Thick Washer	AN960-416	2
15.	Steel Bushing, 3/8" x .028 x 1/4" *	KAAC0024-2	0
16.	5/16" Eyebolt	AN44B-34A	1
17.	Aluminum Shim	KPBS0003	4
18.	Locking Cam	KPNG0064	1
19.	3/16" Bolt	AN3-4A	1
20.	3/16" Bolt	AN3-14A	4
21.	Bearing Washer **	TRA2435	3
22.	Raw Stock Kit - Nose Gear Disconnect	KAAC0024	1
23.	5/16" Thick Washer	AN960-516	2

*Builder must fabricate from raw stock.
**As required.

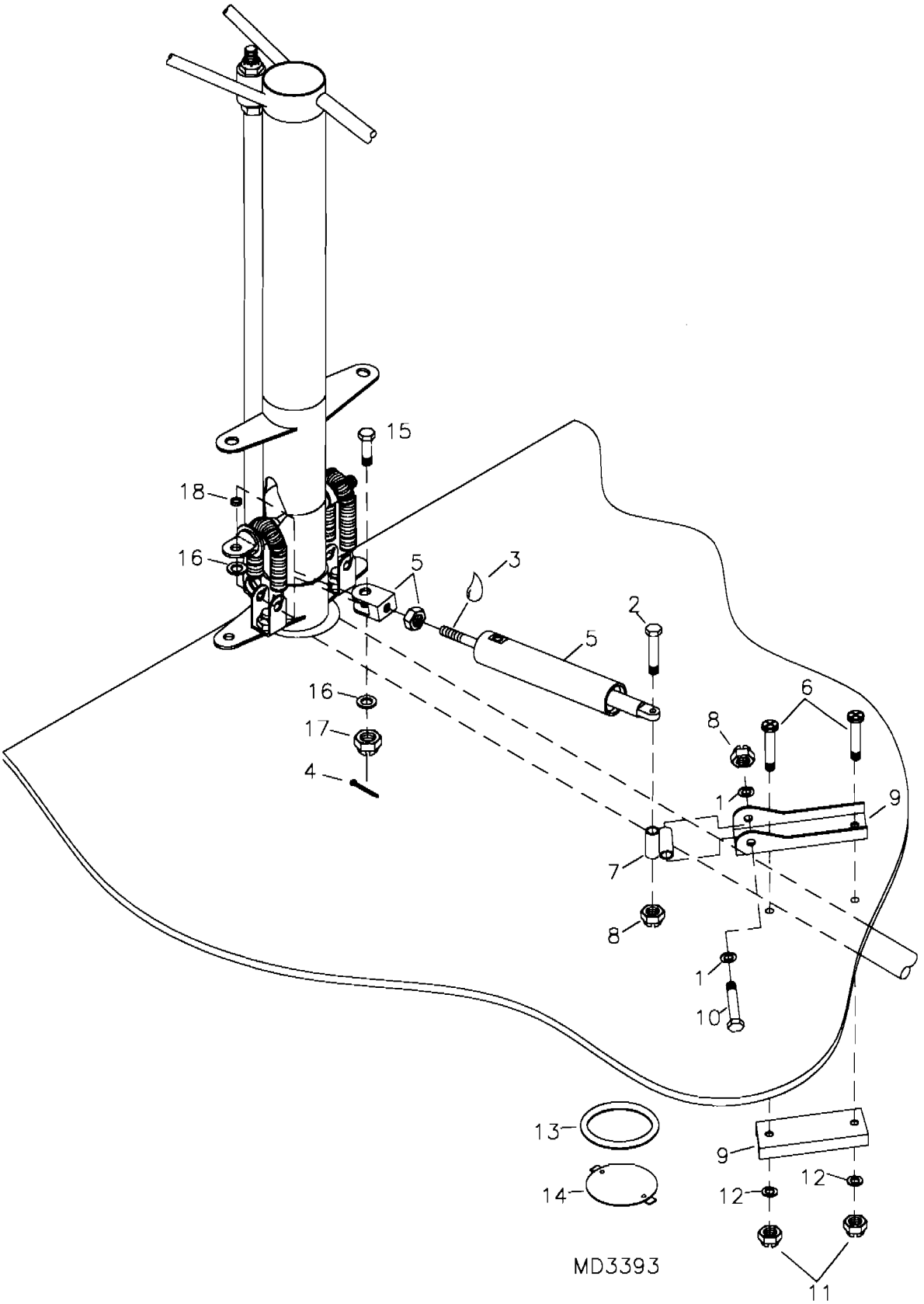

RANS S-6S COYOTE II
OPTIONAL NOSE GEAR DISCONNECT
SHIMMY DAMPENER

S-6S COYOTE II - OPTIONAL NOSE GEAR DISCONNECT SHIMMY DAMPENER

#	DESCRIPTION	PART NUMBER	QUANTITY
1.	1/4" Thin Washer	AN960-416L	2
2.	1/4" Bolt	AN4-13A	1
3.	Loctite Blue	LOC-TITE	0
4.	Small Cotter Pin	MS24665-134	1
5.	Shimmy Damper	KSAC0024	1
6.	3/16" Bolt	AN3-13A	2
7.	Universal Bushing Joint	KPNG0067	1
8.	1/4" Shear Nut	AN364-428A	2
9.	Long Wing Channel *	W-WCL	2
10.	1/4" Bolt	AN4-15A	1
11.	3/16" Shear Nut	AN364-1032A	2
12.	3/16" Thin Washer	AN960-10L	2
13.	Inspection Ring	CV-IR	1
14.	Inspection Plate	CV-IP	1
15.	3/16" Bolt	AN3-7	1
16.	3/16" Thick Washer	AN960-10	2
17.	3/16" Castle Nut	AN310-3	1
18.	Aluminum Bushing, 1/4" x .028 *	KPAC0033	1

*Builder must modify, refer to text for instructions.

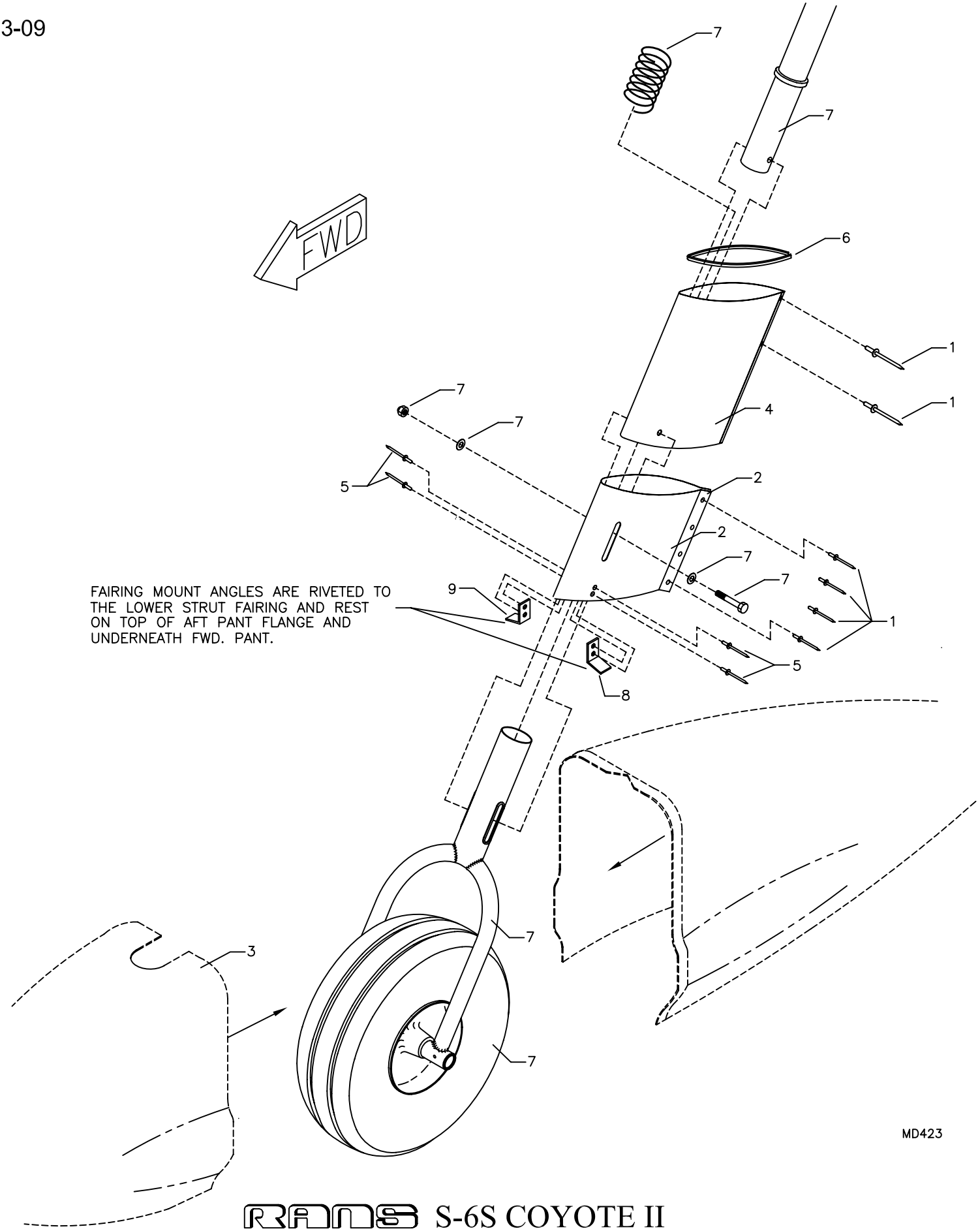

RANS S-6S COYOTE II
NOSE WHEEL STRUT FAIRING

S-6S COYOTE II - NOSE WHEEL STRUT FAIRING

#	DESCRIPTION	PART NUMBER	QUANTITY
1 .	3/32" Aluminum Pop Rivet	40APR1/8	6
2 .	S-6/S-12 Lower Fairing	LG-LN-FAIR	1
3 .	Nose Wheel Pant *	-----	0
4 .	Upper Fairing	6-LG-UN-FA	1
5 .	1/8" Aluminum Pop Rivet - Cherry Q	AAPQ-42	4
6 .	Small Rubber Edging	8510K11	12 in
7 .	Existing Gear Leg Parts *	-----	0
8 .	Upper Fairing Mount	LG-NFMNT-L	1
9 .	Upper Fairing Mount	LG-NFMNT-R	1

*Reference only.

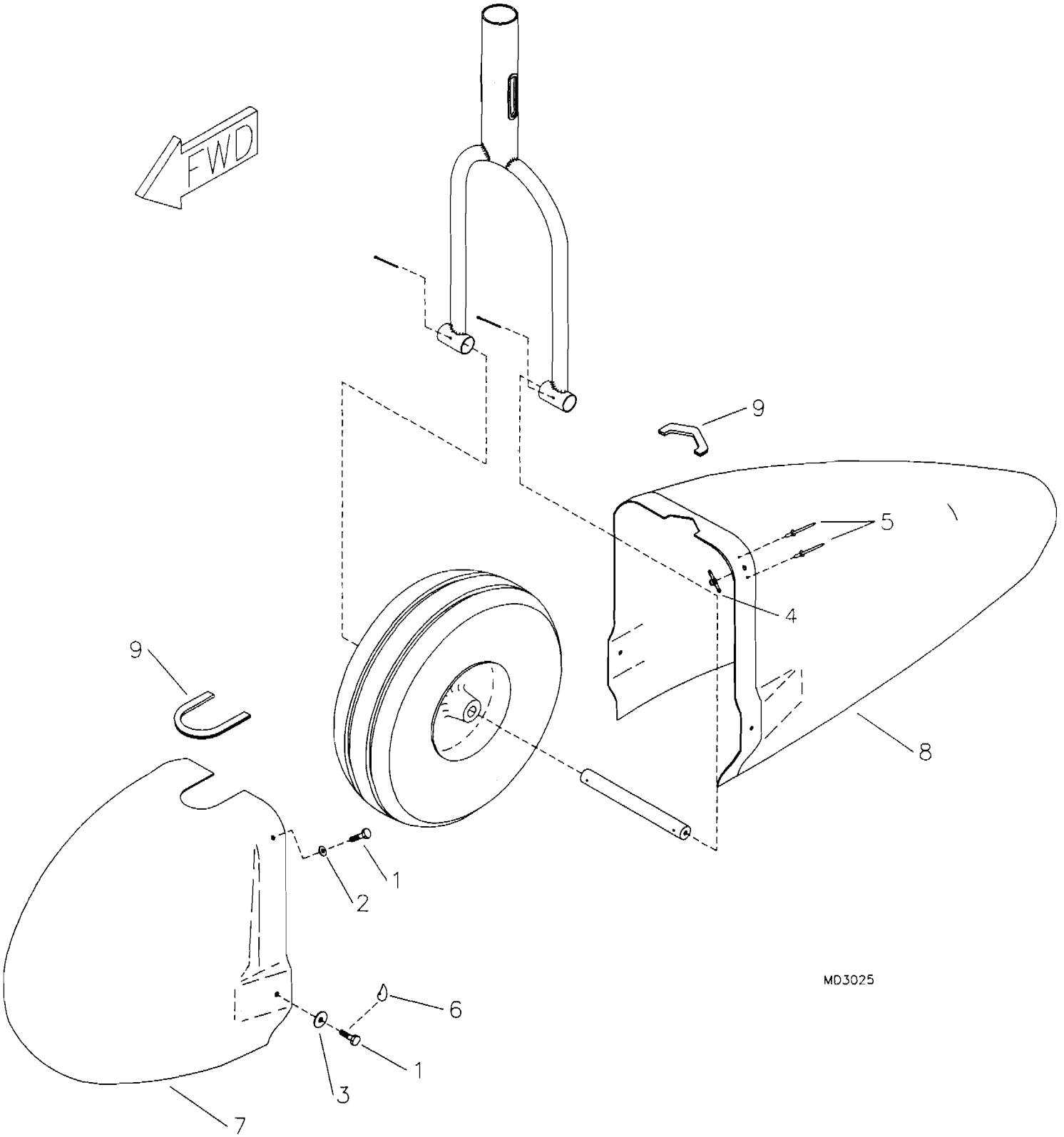

RANS S-6S COYOTE II
OPTIONAL NOSE WHEEL PANT ASSEMBLY

S-6S COYOTE II - OPTIONAL NOSE WHEEL PANT

#	DESCRIPTION	PART NUMBER	QUANTITY
1.	3/16" Bolt	AN3-5A	4
2.	3/16" Thick Washer	AN960-10	2
3.	3/16" Large Washer	AN970-3	2
4.	3/16" Nut Plate	K-1000-3	2
5.	3/32" Aluminum Pop Rivet	40APR1/8	4
6.	Loctite Blue	LOC-TITE	0
7.	Nose Wheel Pant, FWD	NWP-FWD	1
8.	Nose Wheel Pant, AFT	NWP-AFT	1
9.	Rubber Trim	X1011	8 in

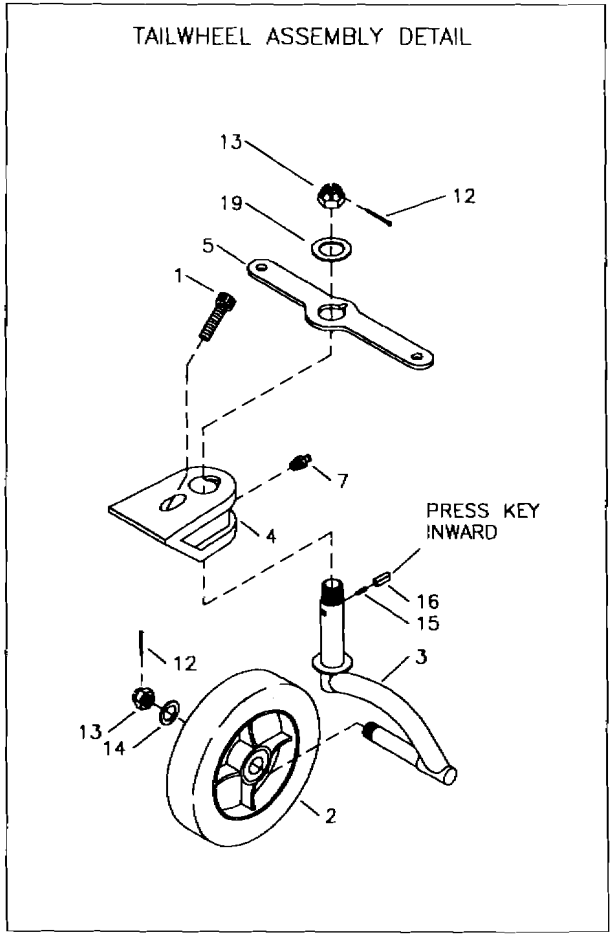

MD3693

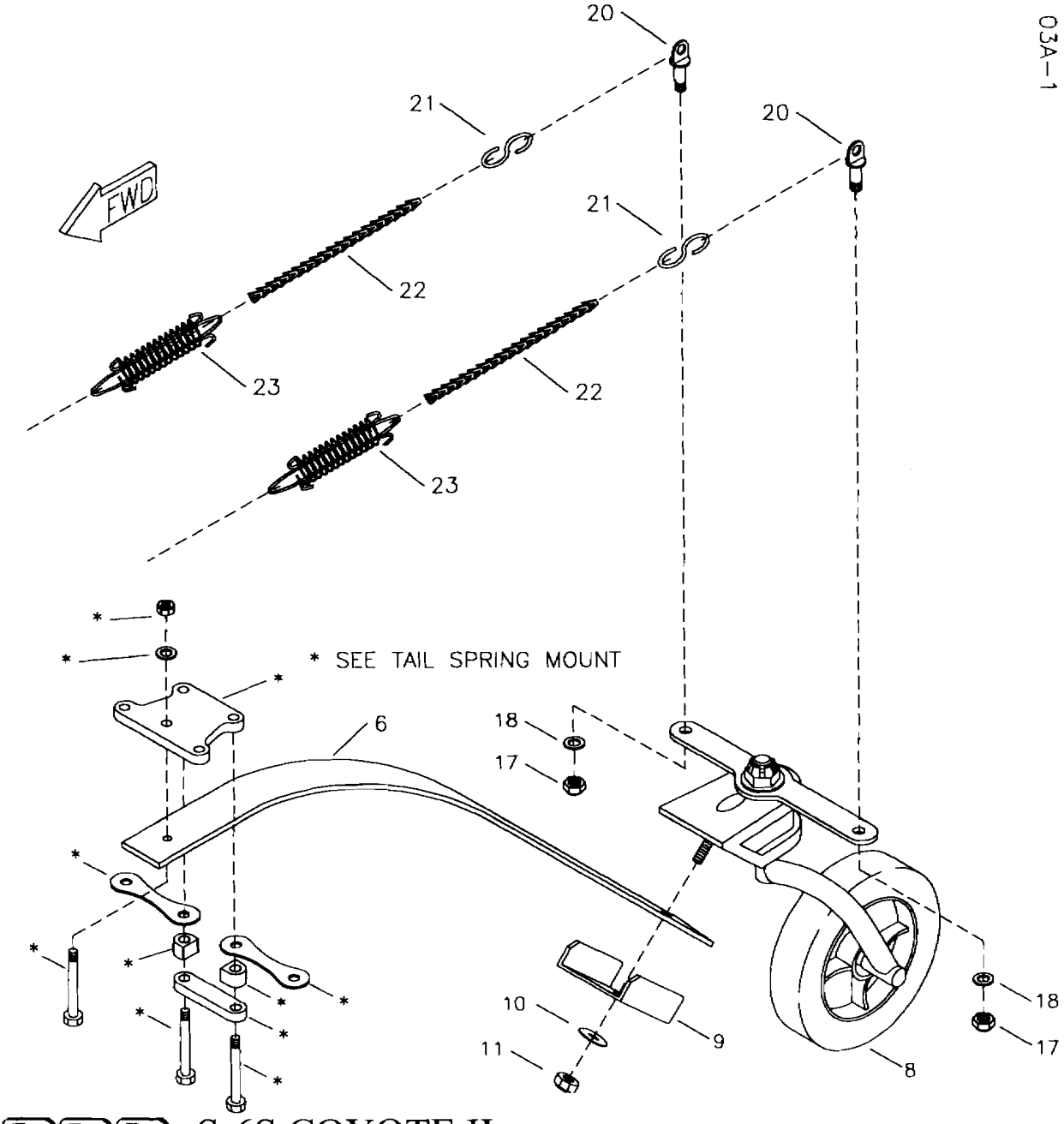

RANS S-6S COYOTE II
TAILWHEEL ASSEMBLY

S-6S COYOTE II - TAILWHEEL

#	DESCRIPTION	PART NUMBER	QUANTITY
1.	Socket Head Cap Screw *	KSHW0058	1
2.	Tailwheel *	KSTG0002	1
3.	Tailwheel - Fork *	KPTG0005	1
4.	Tailwheel - Swivel Block *	KPTG0003	1
5.	Tailwheel - Steer Horn *	KPTG0004	1
6.	Tail Spring	KPTG0033	1
7.	Grease Fitting *	MS5003-1	1
8.	Tailwheel Assembly	KATG0002	1
9.	Tailwheel - Spring Mount Channel *	KPTG0007	1
10.	3/8" Thick Washer *	AN960-616	1
11.	3/8" Tensile Loc Nut *	AN365-624A	1
12.	Cotter Pin *	MS24665-287	2
13.	1/2" Castle Nut *	AN320-8	2
14.	1/2" Thick Washer *	AN960-816	1
15.	Tailwheel - Tension Spring *	KSTG0003	1
16.	Tailwheel - Tension Key *	KPTG0006	1
17.	1/4" Shear Nut	AN364-428A	2
18.	1/4" Thick Washer	AN960-416	2
19.	Washer *	KSHW0059	1
20.	1/4" Eyebolt	AN43B-5A	2
21.	"S" Hook	TW-SHOOK	2
22.	Chain	TW-C	2
23.	Steer Spring	TW-S-SPR	2

*Included in tailwheel assembly.

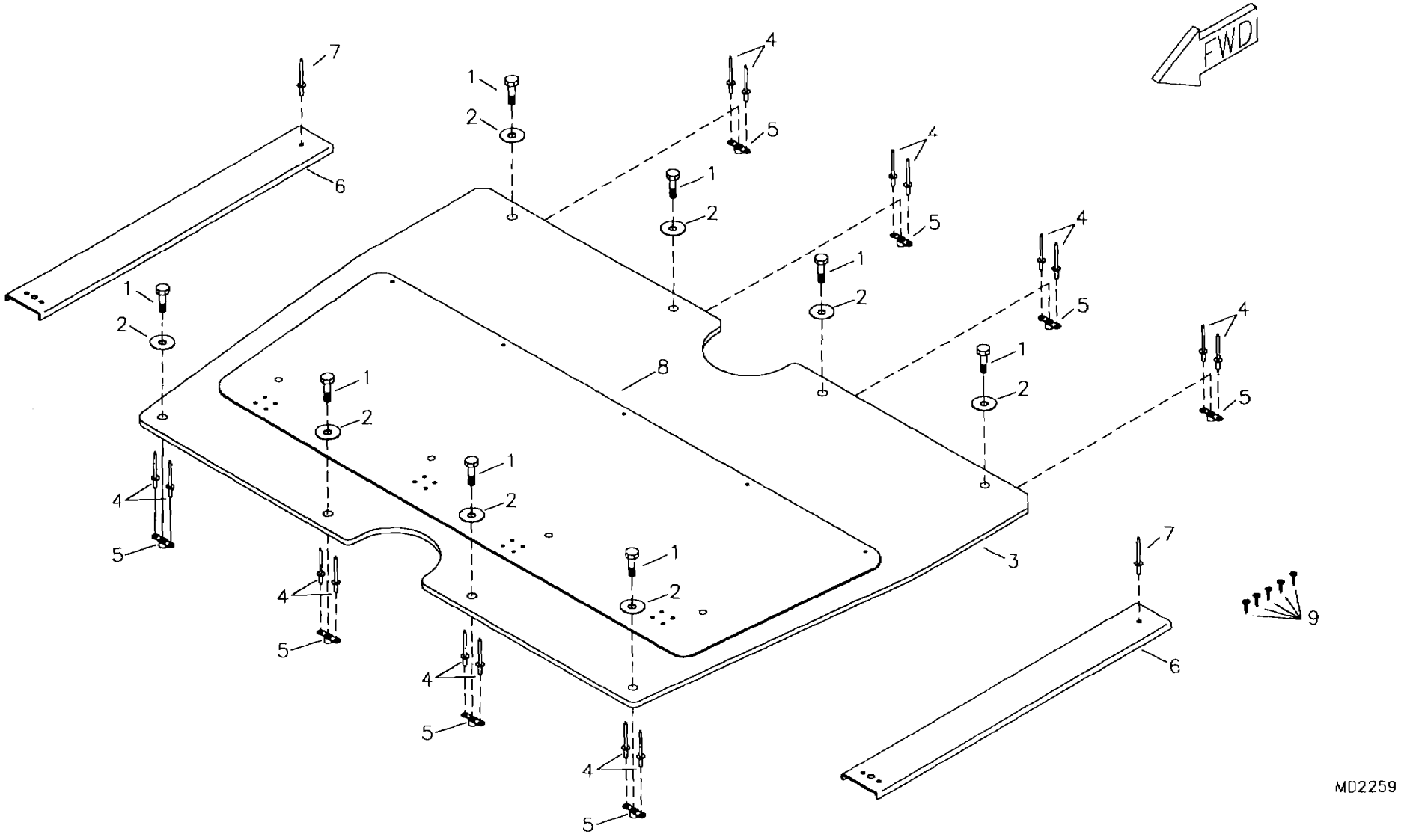

RAMS S-6S COYOTE II FLOORBOARD ASSEMBLY

S-6S COYOTE II - FLOORBOARD ASSEMBLY

#	DESCRIPTION	PART NUMBER	QUANTITY
1.	3/16" Bolt	AN3-5A	8
2.	3/16" Large Washer	AN970-3	8
3.	Floorboard	FB-FB(6)	1
4.	3/32" Aluminum Pop Rivet	40APR1/8	16
5.	3/16" Nut Plate	K-1000-3	8
6.	Floorboard Support Channel	KPFU0010	2
7.	3/16" Stainless Steel Pop Rivet - Cherry Q	CCPQ-62	2
8.	Floorboard Wear Plate	KPFU0381	1
9.	#4 Small Pan Head Screw	4X1/4 PHS	5

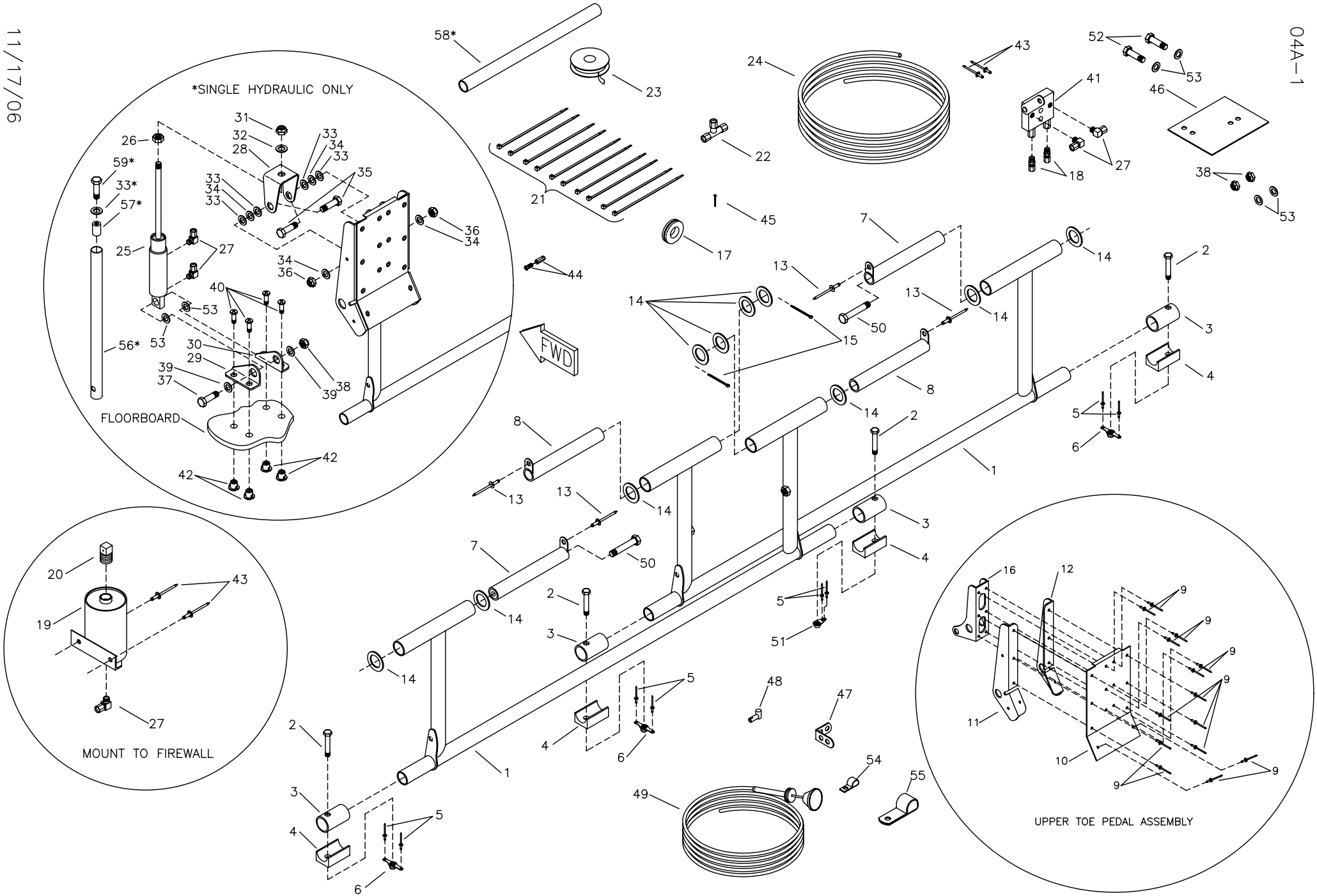

MD2600
REV. D

RANS S-6S COYOTE II
HYDRAULIC BRAKE SYSTEM

S-6S COYOTE II - STANDARD SINGLE HYDRAULIC BRAKE SYSTEM

#	DESCRIPTION	PART NUMBER	QUANTITY
1.	Rudder Pedal	KPCS0066	2
2.	3/16" Bolt	AN3-13A	4
3.	Rudder Pedal Bushing	KPCS0017	4
4.	Brake Saddle	KPCS0024	4
5.	3/32" Aluminum Pop Rivet	40APR1/8	8
6.	3/16" Nut Plate	K-1000-3	3
7.	Swivel Bushing	KPCS0075	2
8.	Swivel Bushing	KPCS0056	2
9.	1/8" Aluminum Pop Rivet - Cherry Q	AAPQ-42	56
10.	Rudder Pedal-Web	KPCS0063	4
11.	Rudder Pedal-Hinge Plate, LH	KPCS0064-L	4
12.	Rudder Pedal-Hinge Plate, RH	KPCS0064-R	4
13.	3/16" Stainless Steel Pop Rivet - Cherry Q	CCPQ-62	4
14.	1/2" Plastic Washer	KSAC0005	12
15.	Large Cotter Pin	MS24665-285	2
16.	Rudder Pedal-Cylinder Attach Bracket	KPCS0065	4
17.	Grommet	MS35489-6	1
18.	Straight Fitting	KSBS0002	2
19.	Hydraulic Brake Reservoir	KSBS0034	1
20.	Vented 1/8" Cap Plug ****	-----	0
21.	Zip Ties	ZIP TIES	10
22.	Tee Fitting	KSBS0003	1
23.	Teflon Tape **	TEFLON TAPE	0
24.	Hydraulic Brake Line (+4 Dual Hyd Brakes)	KSBS0004	24 ft
25.	Master Cylinder - Brake (+2 Dual Hyd Brakes)	KSBS0031	2
26.	5/16" Plain Nut *	-----	0
27.	90 Fitting	KSBS0001	11
28.	Stainless Steel U Bracket	SU-118	4
29.	Brake Mount Bracket, LH	B-MBRKT-L	4
30.	Brack Mount Bracket, RH	B-MBRKT-R	4
31.	5/16" Shear Nut (+2 Dual Hyd Brakes)	AN364-524A	2
32.	5/16" Thin Washer (+2 Dual Hyd Brakes)	AN960-516L	2
33.	1/4" Thin Washer (-2 Dual Hyd Brakes)	AN960-416L	18
34.	1/4" Thick Washer	AN960-416	16
35.	1/4" Bolt	AN4-5A	8
36.	1/4" Shear Nut	AN364-428A	8
37.	3/16" Bolt	AN3-12A	4
38.	3/16" Shear Nut	AN364-1032A	6
39.	3/16" Thick Washer	AN960-10	8
40.	8-32 Pan Head Machine Screw	KSHW0008	16
41.	Parking Brake	KSBS0007	1
42.	8-32 Tee Nut	KSHW0007	16

*Supplied with Master Cylinder.
**Builder provides. ***Builder must fabricate from raw stock.
****Supplied with Brake Reservoir

S-6S COYOTE II - STANDARD SINGLE HYDRAULIC BRAKE SYSTEM - CONTINUED

#	DESCRIPTION	PART NUMBER	QUANTITY
43.	3/16" Aluminum Pop Rivet - Cherry Q	AAPQ-62	4
44.	Wire Swivel/Screw Stop	2361	1
45.	Small Cotter Pin	MS24665-134	1
46.	Park Brake Backing Plate	KPBS0008	1
47.	Cable Housing Swivel Stop Bracket	KPBS0010	1
48.	Cable Housing Swivel Stop	KPBS0009	1
49.	Parking Brake Control Cable	4-336	1
50.	3/16" Bolt	AN3-15	2
51.	3/16" Single Ear Nut Plate	MS21051-L3	1
52.	3/16" Bolt	AN3-12A	2
53.	3/16" Thin Washer (+4 Dual Hyd Brakes)	AN960-10L	8
54.	Conduit Clamp	S1-CC	1
55.	5/8" Non-Cushioned Clamp	AN742-D10	1
56.	Aluminum Tube, 1/2" x .035 x 7" ***	KAAC0027-1	0
57.	3/16" Insert Nut (Less Dual Hyd Brakes)	I-NUT	2
58.	Hydraulic Brake Raw Stock Kit (Less Dual Hyd Brakes)	KAAC0027	1
59.	1/4" Bolt (Less Dual Hyd Brakes)	AN4-4A	2

*Supplied with Cleveland Master Cylinder.
**Builder provides.
***Builder must fabricate from raw stock.

S-6S COYOTE II - OPTIONAL DUAL HYDRAULIC BRAKE SYSTEM

#	DESCRIPTION	PART NUMBER	QUANTITY
1.	Rudder Pedal	KPCS0066	2
2.	3/16" Bolt	AN3-13A	4
3.	Rudder Pedal Bushing	KPCS0017	4
4.	Brake Saddle	KPCS0024	4
5.	3/32" Aluminum Pop Rivet	40APR1/8	8
6.	3/16" Nut Plate	K-1000-3	3
7.	Swivel Bushing	KPCS0075	2
8.	Swivel Bushing	KPCS0056	2
9.	1/8" Aluminum Pop Rivet - Cherry Q	AAPQ-42	56
10.	Rudder Pedal - Web	KPCS0063	4
11.	Rudder Pedal - Hinge Plate, LH	KPCS0064-L	4
12.	Rudder Pedal - Hinge Plate, RH	KPCS0064-R	4
13.	3/16" Stainless Steel Pop Rivet - Cherry Q	CCPQ-62	4
14.	1/2" Plastic Washer	KSAC0005	12
15.	Large Cotter Pin	MS24665-285	2
16.	Rudder Pedal - Cylinder Attach Bracket	KPCS0065	4
17.	Grommet	MS35489-6	1
18.	Straight Fitting	KSBS0002	2
19.	Hydraulic Brake Reservoir	KSBS0034	1
20.	Vented 1/8" Cap Plug ****	-----	1
21.	Zip Ties	ZIP TIES	10
22.	Tee Fitting	KSBS0003	1
23.	Teflon Tape **	TEFLON TAPE	0
24.	Hydraulic Brake Line	KSBS0004	28 ft
25.	Master Cylinder - Brake	KSBS0031	4
26.	5/16" Plain Nut *	-----	0
27.	90 Fitting	KSBS0001	11
28.	Stainless Steel U Bracket	SU-118	4
29.	Brake Mount Bracket, LH	B-MBRKT-L	4
30.	Brake Mount Bracket, RH	B-MBRKT-R	4
31.	5/16" Shear Nut	AN364-524A	4
32.	5/16" Thin Washer	AN960-516L	4
33.	1/4" Thin Washer	AN960-416L	16
34.	1/4" Thick Washer	AN960-416	16
35.	1/4" Bolt	AN4-5A	8
36.	1/4" Shear Nut	AN364-428A	8
37.	3/16" Bolt	AN3-12A	4
38.	3/16" Shear Nut	AN364-1032A	6
39.	3/16" Thick Washer	AN960-10	8
40.	8-32 Pan Head Machine Screw	KSHW0008	16
41.	Parking Brake	KSBS0007	1
42.	8-32 Tee Nut	KSHW0007	16

*Supplied with Master Cylinder.
**Builder provides. ***Builder must fabricate from raw stock.
****Supplied with Brake Reservoir

S-6S COYOTE II - OPTIONAL DUAL HYDRAULIC BRAKE SYSTEM (CONTINUED)

#	DESCRIPTION	PART NUMBER	QUANTITY
43.	3/16" Aluminum Pop Rivet - Cherry Q	AAPQ-62	4
44.	Wire Swivel/Screw Stop	2361	1
45.	Small Cotter Pin	MS24665-134	1
46.	Park Brake Backing Plate	KPBS0008	1
47.	Cable Housing Swivel Stop Bracket	KPBS0010	1
48.	Cable Housing Swivel Stop	KPBS0009	1
49.	Parking Brake Control Cable	4-336	1
50.	3/16" Bolt	AN3-15	2
51.	3/16" Single Ear Nut Plate	MS21051-L3	1
52.	3/16" Bolt	AN3-12A	2
53.	3/16" Thin Washer	AN960-10L	12
54.	Conduit Clamp	S1-CC	1
55.	5/8" Non-Cushioned Clamp	AN742-D10	1

*Supplied with Master Cylinder.
**Builder provides.
***Builder must fabricate from raw stock.

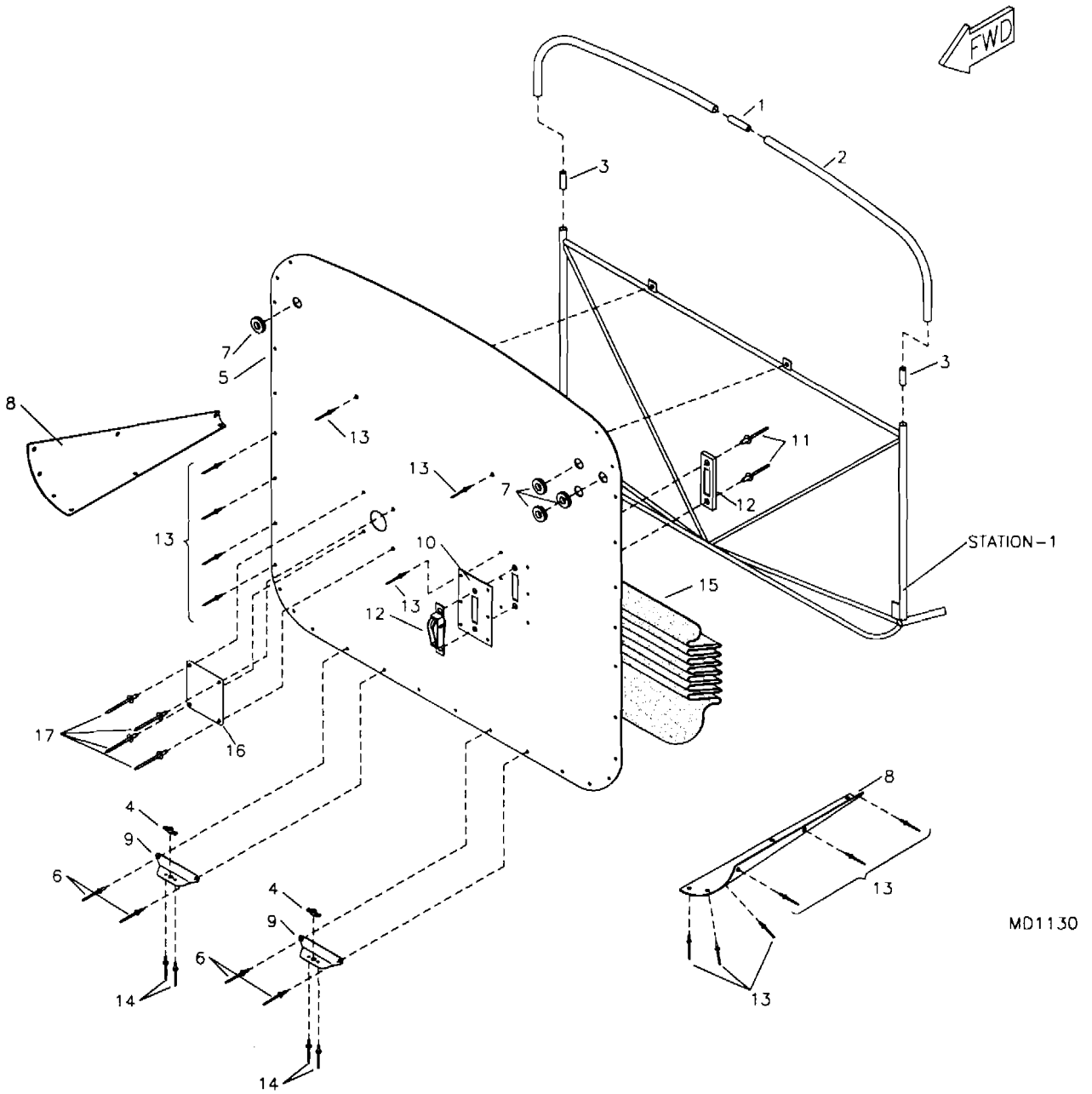

RANS S-6S COYOTE II
FIREWALL ASSEMBLY

S-6S COYOTE II - S-1 FIREWALL

#	DESCRIPTION	PART NUMBER	QUANTITY
1.	Splice Tube, 3/4" x .058 x 4" *	KAAC0004-3	0
2.	S-1 Top Former	S1-TF-ES	2
3.	Reducer, 3/4" x .058 x 1 *	KAAC0004-3	0
4.	3/16" Nut Plate	K-1000-3	2
5.	Firewall	KPFW0014	1
6.	1/8" Stainless Steel Pop Rivet - Cherry Q	CCPQ-42	4
7.	Rubber Grommet	MS35489-17	4
8.	Forward Contour Former	EC-FCF	2
9.	Mounting Bracket	KPAC0003	2
10.	Reinforcing Plate 4x4x.032 (-1 Elect Start) **	S1-FPP	1
11.	3/16" Aluminum Pop Rivet - Cherry Q (-2 Elct Strt) **	AAPQ-64	2
12.	Firewall Pulley (-1 Elect Start) **	106	1
13.	1/8" Aluminum Pop Rivet - Cherry Q	AAPQ-42	55
14.	3/32" Aluminum Pop Rivet	40APR1/8	4
15.	Firewall Soundproofing	S1-FWSP	1
16.	Heater Hole Patch	KPFW0015	1
17.	3/16" Stainless Steel Pop Rivet - Cherry Q	CCPQ-62	4

*Builder must fabricate from raw stock.
**Delete with electric starter option.

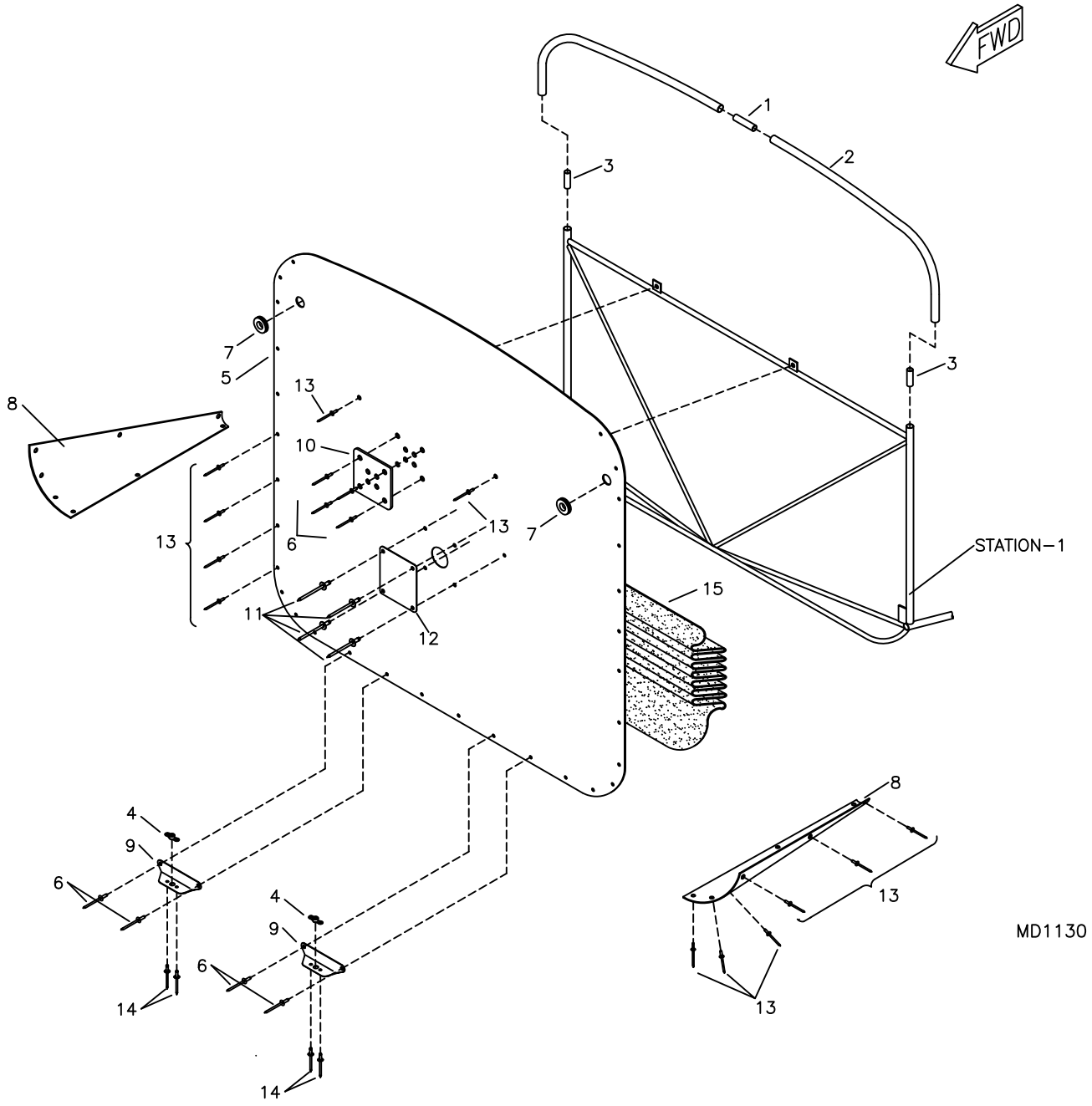

RANS S-6S COYOTE II
912UL/912ULS FIREWALL ASSEMBLY

S-6S COYOTE II - S-1 FIREWALL - 912

#	DESCRIPTION	PART NUMBER	QUANTITY
1 .	Splice Tube, 3/4" x .058 x 4" *	KAAC0004-3	0
2 .	S-1 Top Former	S1-TF-ES	2
3 .	Reducer, 3/4" x .058 x 1 *	KAAC0004-3	0
4 .	3/16" Nut Plate	K-1000-3	2
5 .	Firewall	KPFW0014	1
6 .	1/8" Stainless Steel Rivet - Cherry Q	CCPQ-42	8
7 .	Rubber Grommet	MS35489-17	2
8 .	Forward Contour Former	EC-FCF	2
9 .	Mounting Bracket	KPAC0003	2
10 .	Firewall Reinforcement	KPPW0289	1
11 .	3/16" Stainless Steel Rivet - Cherry Q	CCPQ-62	4
12 .	Heater Hole Patch	KPFW0015	1
13 .	1/8" Aluminum Rivet - Cherry Q	AAPQ-42	55
14 .	3/32" Aluminum Pop Rivet	40APR1/8	4
15 .	Firewall Soundproofing	S1-FWSP	1

*Builder fabricates from raw stock.

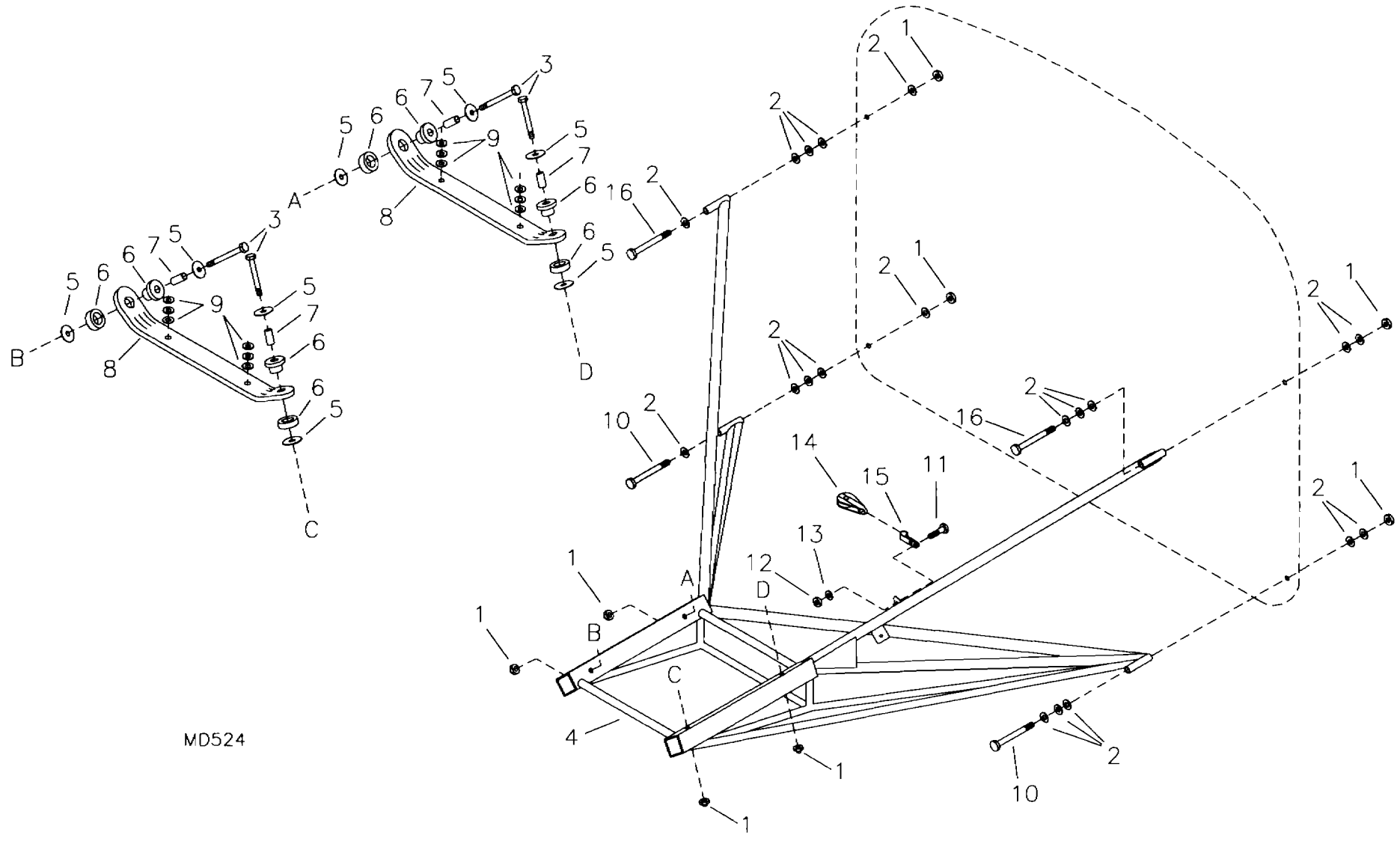

RANS S-6S COYOTE II
503/582 FOCALIZED ENGINE MOUNT

S-6S COYOTE II - 503/582 ENGINE MOUNT

#	DESCRIPTION	PART NUMBER	QUANTITY
1.	1/4" Tensile Nut	AN365-428A	8
2.	1/4" Thick Washer	AN960-416	20
3.	1/4" Bolt	AN4-27A	4
4.	Focalized Engine Mount	EG-FM-503/582(6)	1
5.	1/8" Aluminum Washer	EG-AW	8
6.	Barry Mount	22001	4
7.	Spacer Bushing, 1 1/8" x 3/8" x .058	EG-B-3/8X1 1/8	4
8.	Focalized Mount Plate	EG-FOMP	2
9.	7/16" Thick Washer	AN960-716	8
10.	1/4" Bolt	AN4-17A	2
11.	3/16" Bolt *	AN3-4A	1
12.	3/16" Shear Nut *	AN364-1032A	1
13.	3/16" Thin Washer *	AN960-10L	1
14.	Pulley *	KSHW0040	1
15.	Jib Strap *	RL-319	1
16.	1/4" Bolt	AN4-30A	2

*Delete with electric starter option.

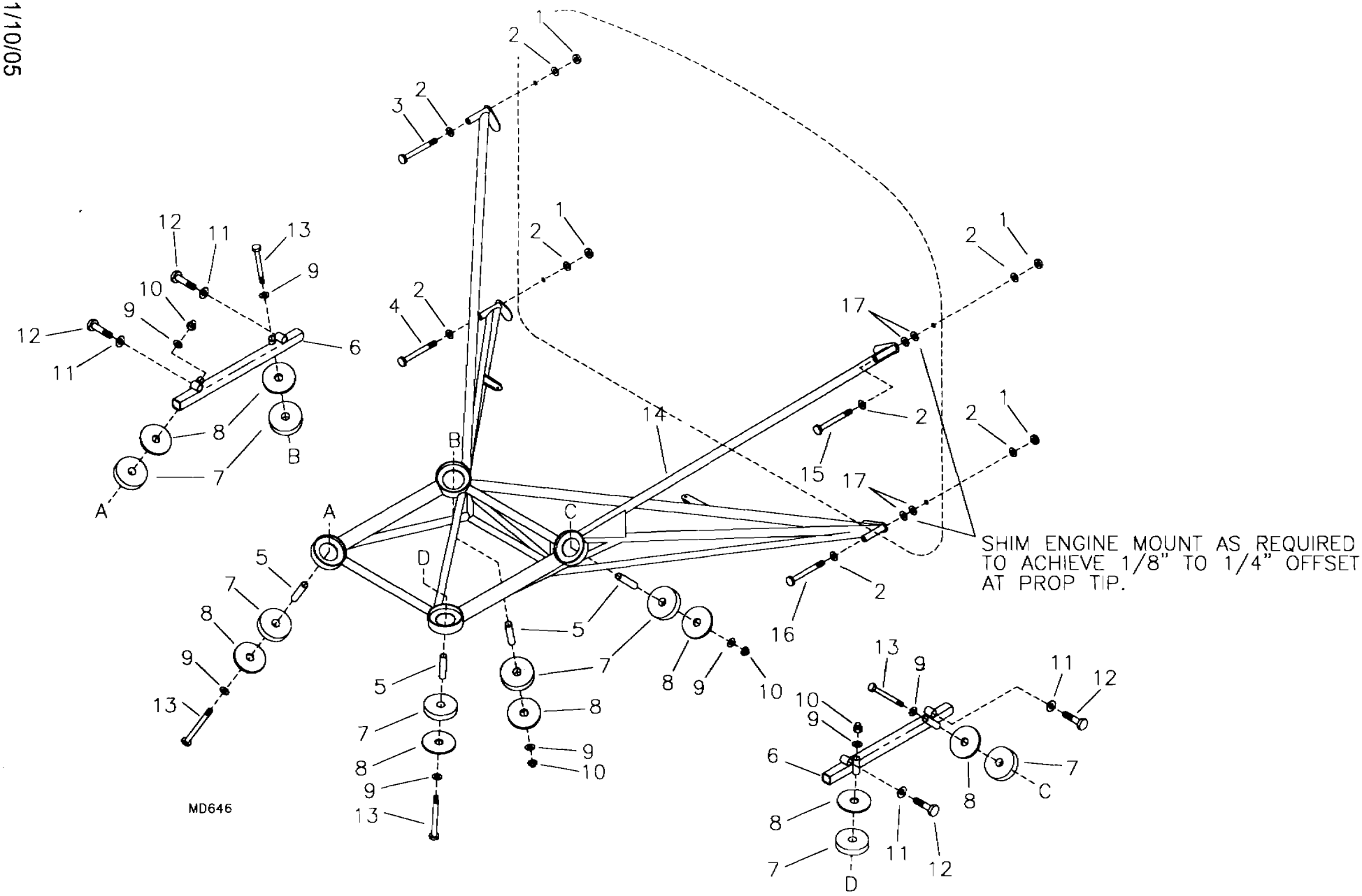

RANS S-6ES/S-6S COYOTE II
912/912S DYNAFOCAL ENGINE MOUNT

S-6S COYOTE II - 912/912S ENGINE MOUNT

#	DESCRIPTION	PART NUMBER	QUANTITY
1.	1/4" Tensile Nut	AN365-428A	4
2.	1/4" Thin Washer	AN960-416L	8
3.	1/4" Bolt	AN4-26A	1
4.	1/4" Bolt	AN4-16A	1
5.	Bushing	912DONUT-4	4
6.	912 Engine Attachment	EG-FEA-912	2
7.	Rubber Washer	912DONUT-3	8
8.	Washer	912DONUT-2	8
9.	3/8" Thick Washer	AN960-616	8
10.	3/8" Tensile Loc Nut	MS21045-6	4
11.	10MM Loc Washer	945-753	4
12.	10MM Bolt	875-550	4
13.	3/8" Bolt	AN6-33A	4
14.	912 Focalized Engine Mount	KAPW0014	1
15.	1/4" Bolt	AN4-27A	1
16.	1/4" Bolt	AN4-17A	1
17.	1/4" Thick Washer	AN960-416	4

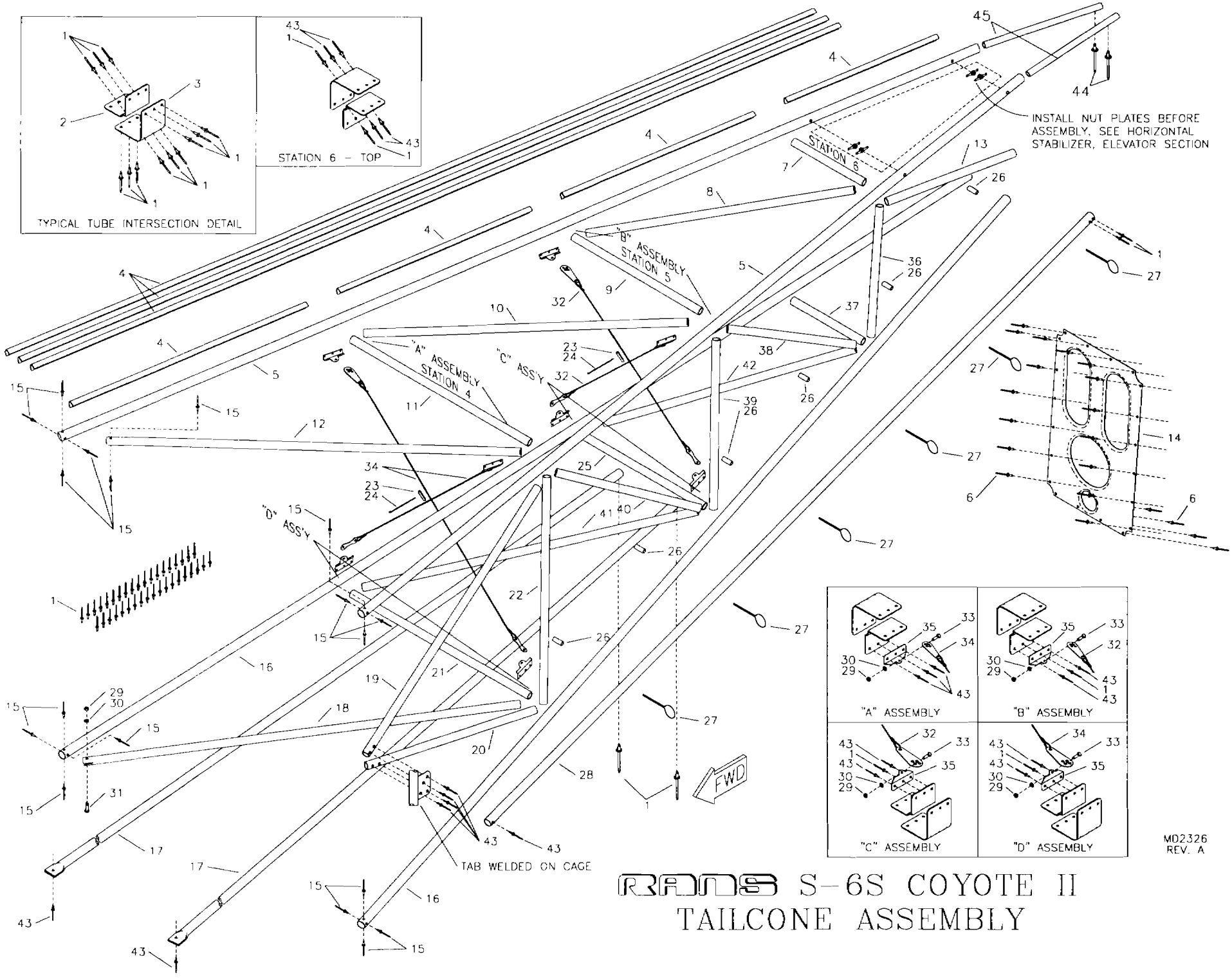

RANS S-6S COYOTE II
TAILCONE ASSEMBLY

S-6S COYOTE II - TAILCONE

#	DESCRIPTION	PART NUMBER	QUANTITY
1.	1/8" Stainless Steel Pop Rivet - Cherry Q	CCPQ-42	257
2.	3-Way Cluster Gusset Inner	3-CG-I	12
3.	3-Way Cluster Gusset Outer	3-CG-O	12
4.	Longeron Fairings	LONG-FAR	4
5.	Top Longeron, 9'	KPFU0243	2
6.	1/8" Stainless Steel Pop Rivet - Cherry Q	CCPQ-41	20
7.	Station 6 Top Cross Tube	TC-S-6-T	1
8.	Station 6 Top Diagonal	KPFU0252	1
9.	Station 5 Top Cross Tube	KPFU0251	1
10.	Station 5 Top Diagonal	KPFU0250	1
11.	Station 4 Top Cross Tube	KPFU0249	1
12.	Station 4 Top Diagonal	KPFU0248	1
13.	Station 7 Side Diagonal	KPFU0253	2
14.	Station 6 Bulkhead	KPFU0259	1
15.	3/16" Stainless Steel Pop Rivet - Cherry Q	CCPQ-62	18
16.	Bottom Longeron, 9'	TC-BOT-LONG	2
17.	Bottom Stringer, 1/2 x .035 x 119" *	KAAC0004-10	0
18.	Station 4 Bottom Diagonal	KPFU0246	1
19.	Station 4 Side Diagonal	KPFU0245	2
20.	Station 4 Lower Side Diagonal	KPFU0247	2
21.	Station 4 Bottom Cross Tube	TC-S-4-B	1
22.	Station 4 Side Tube	KPFU0244	2
23.	1/8" Primer Line, 1"	PRIMER LINE	2
24.	Zip Ties	ZIP TIES	2
25.	Station 5 Bottom Cross Tube	TC-S-5-B	1
26.	Stringer Stand Off, 1/2" Nylon Tubing x X *	KAAC0004-8	0
27.	Safety Wire	SAFETY WIRE	0
28.	Side Stringer	TC-S-STR	2
29.	3/16" Shear Nut	AN364-1032A	9
30.	3/16" Thin Washer	AN960-10L	8
31.	3/16" Bolt	AN3-11A	1
32.	Station 5 Diagonal Cable	KAFU0031	2
33.	3/16" Bolt **	AN3-4A	8
34.	Station 4 Diagonal Cable	KAFU0030	2
35.	Tailcone Cable Attachment	KPFU0026	8
36.	Station 6 Side Tube	KPFU0254	2
37.	Station 6 Bottom Cross Tube	TC-S-6-B	1
38.	Station 6 Side Diagonal	KPFU0255	2
39.	Station 5 Side Tube	KPFU0256	2
40.	Station 5 Side Diagonal	KPFU0257	2
41.	Station 5 Bottom Diagonal	TC-5-B-1	1
42.	Station 6 Bottom Diagonal	TC-6-B-1	1
43.	1/8" Stainless Steel Pop Rivet - Cherry Q	CCPQ-44	50
44.	3/32" Aluminum Pop Rivet	40APR1/8	2
45.	Top Longeron Doubler, 7/8" x .058 x 29 7/8" *	KAAC0004-2	0

*Builder must fabricate from raw stock.
**Use AN3-5Aon lower station 4, if installing Optional AFT Baggage Compartment.

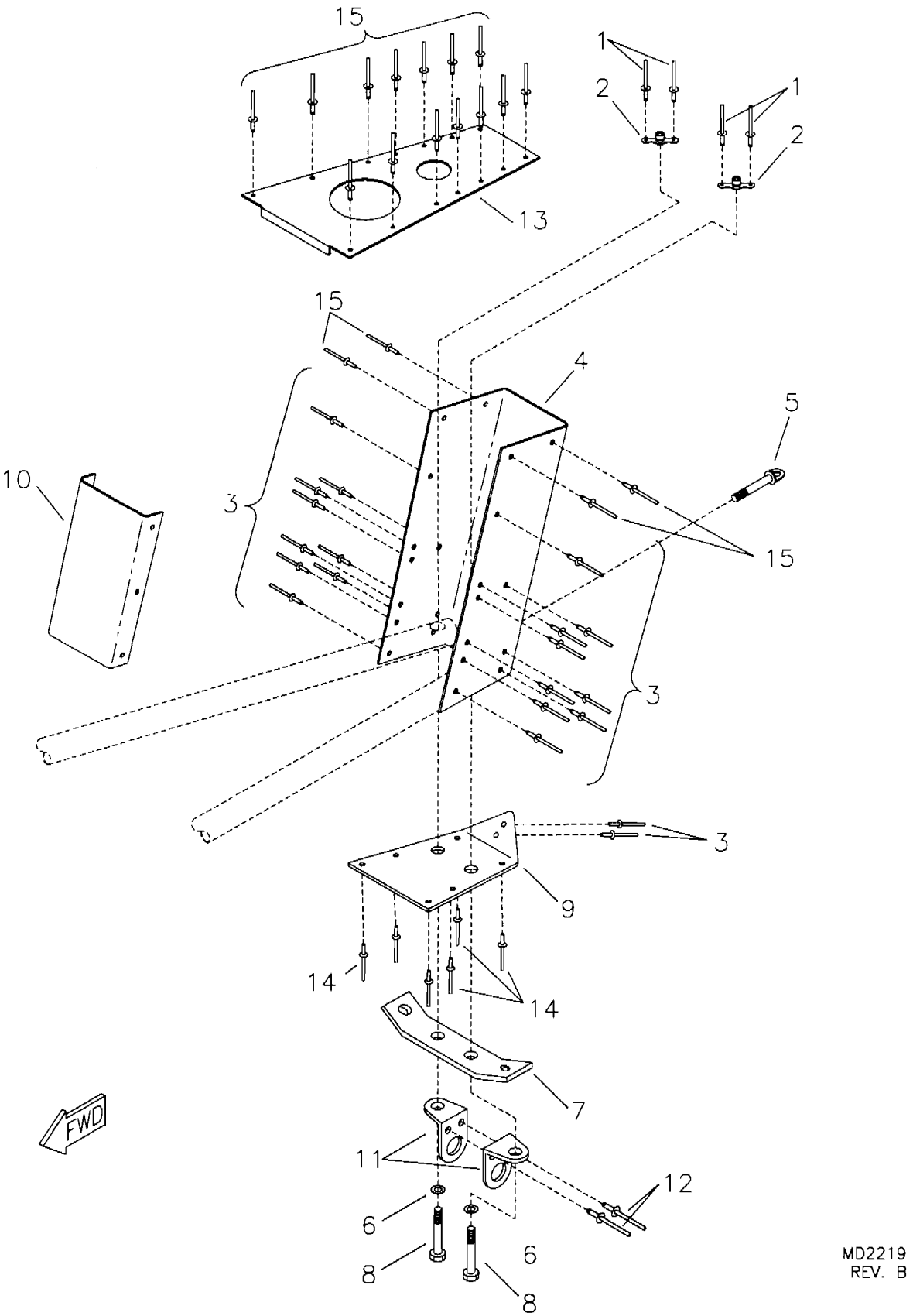

RANS S-6S COYOTE II
TAIL CHANNEL ASSEMBLY

S-6S COYOTE II - TAIL CHANNEL

#	DESCRIPTION	PART NUMBER	QUANTITY
1.	3/32" Aluminum Pop Rivet (Trike only)	40APR1/8	4
2.	1/4" Nut Plate (Trike only)	MS21047-04	2
3.	1/8" Stainless Steel Pop Rivet - Cherry Q	CCPQ-42	42
4.	Tail Channel	TC-TC	1
5.	1/4" Eyebolt *	AN43B-13A	0
6.	1/4" Thin Washer (Trike only)	AN960-416L	2
7.	Lower Cable Tang (Trike only)	TC-LCT	1
8.	1/4" Bolt (Trike only)	AN4-16A	2
9.	Bottom Gusset - Tail Channel	KPFU0279	1
10.	Tail Channel Cover	TC-COVER	1
11.	Tail Tie Down Hook (Trike only)	KPFU0012	2
12.	1/8" Stainless Steel Pop Rivet - Cherry Q	CCPQ-46	2
13.	Tailcone Upper Gusset	KPFU0074	1
14.	1/8" Stainless Steel Pop Rivet - Cherry Q (Trike only)	CCPQ-42	6
15.	1/8" Stainless Steel Pop Rivet - Cherry Q	CCPQ-44	18

*See Vertical Stabilizer.

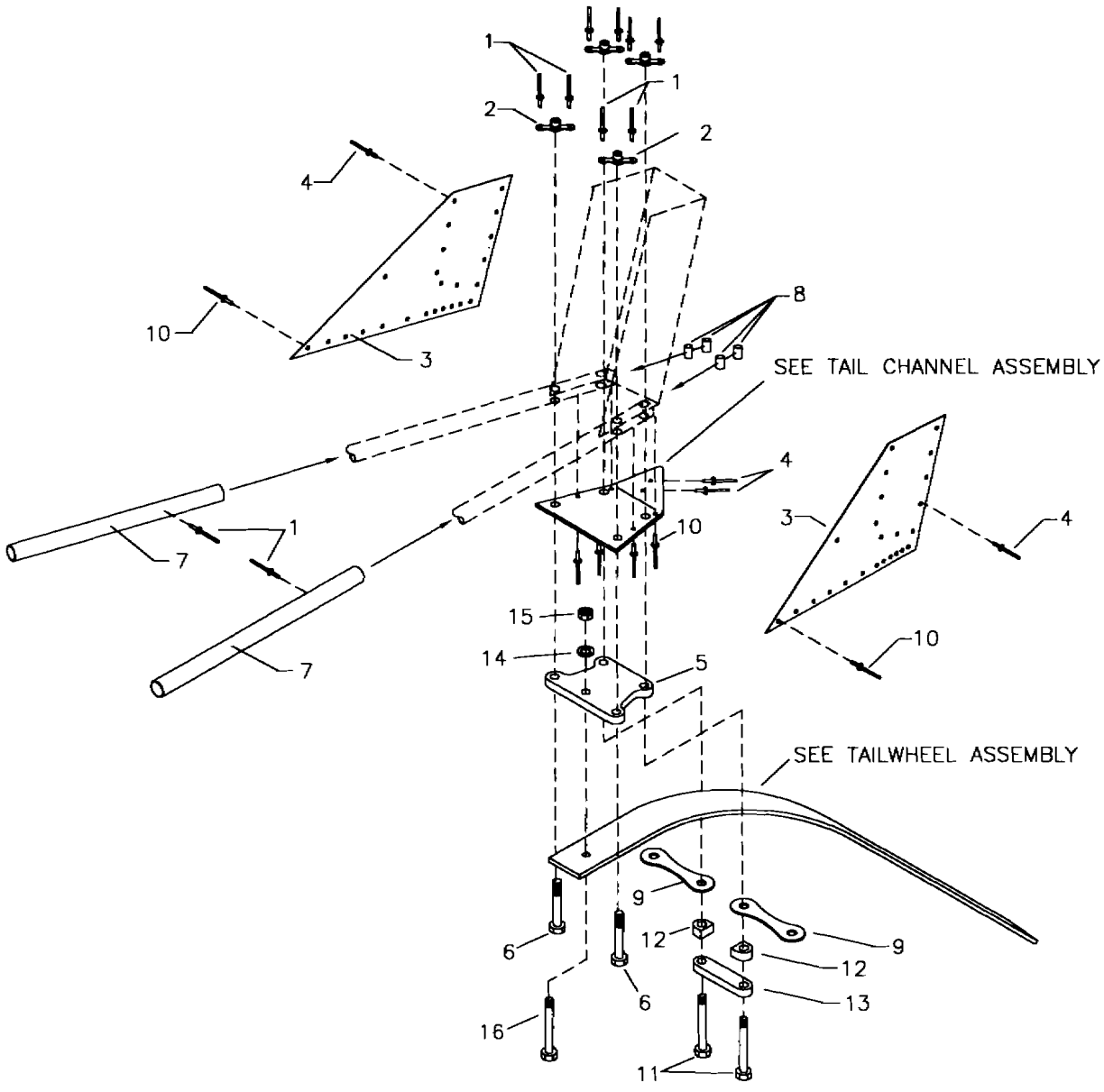

MD245
REV. C

RANS S-6S COYOTE II
CONVENTIONAL GEAR MODEL (TD)
TAIL SPRING MOUNT

S-6S COYOTE II - TAIL SPRING MOUNT

#	DESCRIPTION	PART NUMBER	QUANTITY
1.	3/32" Aluminum Pop Rivet	40APR1/4	10
2.	1/4" Nut Plate	MS21047-04	4
3.	Tail Spring Side Gusset	TSM-SG-T2	2
4.	1/8" Stainless Steel Pop Rivet - Cherry Q	CCPQ-42	22
5.	Tail Spring Mount Plate	KPTG0032	1
6.	1/4" Bolt	AN4-16A	2
7.	Longeron Doubler	TSM-DUB	2
8.	Aluminum Bushings 3/8" x .065 *	TD-ANTI-CB	1
9.	Hummertang **	T12-HT6	2
10.	1/8" Stainless Steel Pop Rivet - Cherry Q	CCPQ-44	30
11.	1/4" Bolt	AN4-23A	2
12.	Bushing - Tailwheel	KPTG0035	2
13.	Mounting Strap - Tailwheel	KPTG0030	1
14.	1/4" Thin Washer	AN960-416L	1
15.	1/4" Tensile Nut	AN365-428A	1
16.	1/4" Bolt	AN4-10A	1

*Builder manufactures from 3/8 X .065 raw stock.
**Builder drills one end to 1/4" diameter.

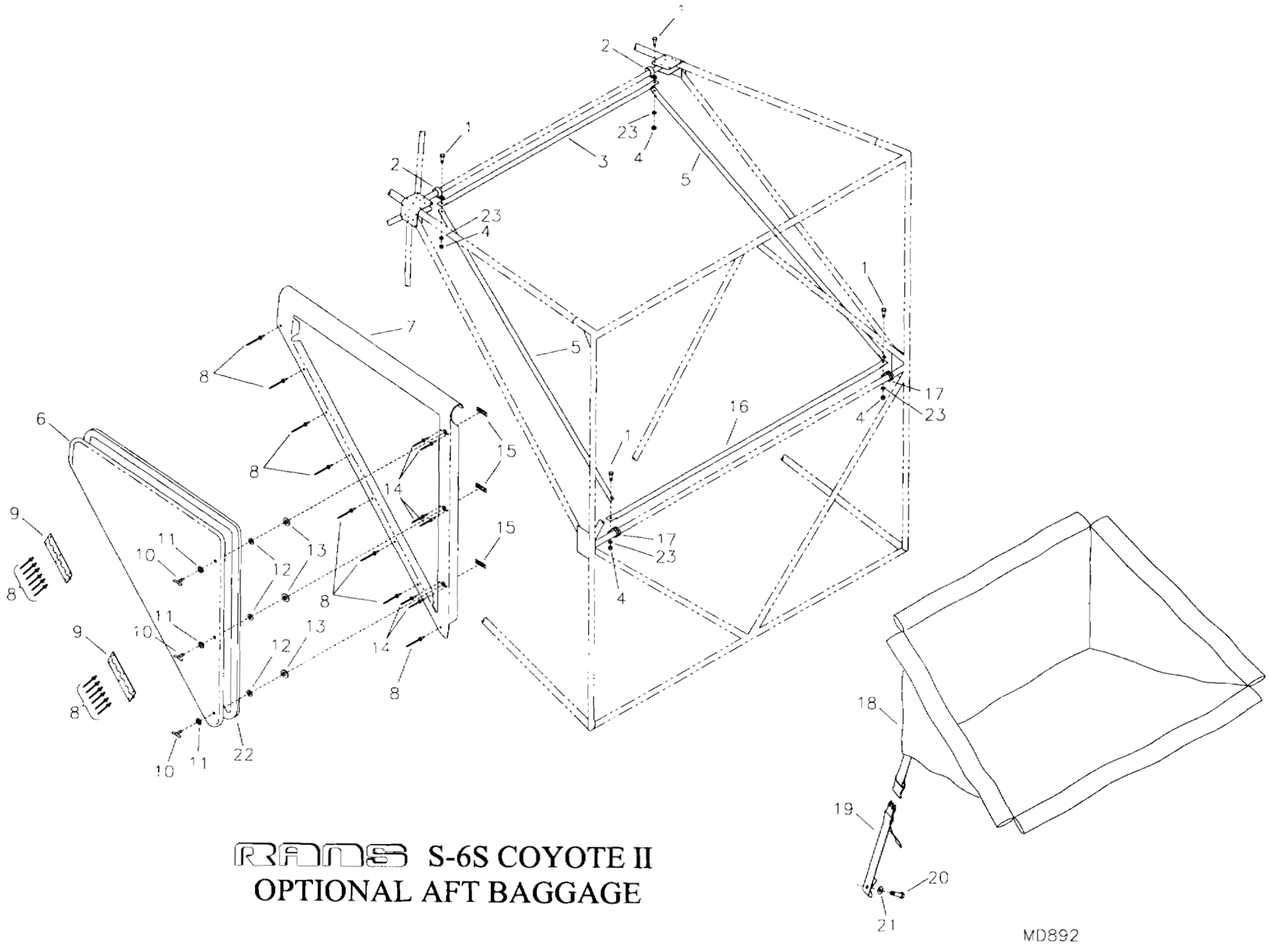

RANS S-6S COYOTE II
OPTIONAL AFT BAGGAGE

S-6S COYOTE II - OPTIONAL AFT BAGGAGE

#	DESCRIPTION	PART NUMBER	QUANTITY
1.	3/16" Bolt	AN3-6A	4
2.	3/4" Non-Cushioned Clamp	AN742-D12	2
3.	Baggage Frame Top Tube	KPFU0002	1
4.	3/16" Shear Nut	AN364-1032A	4
5.	Baggage Frame Side Tube	KPFU0266	2
6.	AFT Baggage Door	KPDR0004	1
7.	AFT Baggage Door Frame	KPDR0003	1
8.	1/8" Aluminum Pop Rivet - Cherry Q	AAPQ-42	20
9.	Piano Hinge *	BD-HINGE	6 in
10.	Wing Head 1/4 Turn Stud	82-12-160-16	3
11.	Rubber Washer	#201	3
12.	Wear Washer Nylon	#103	3
13.	Snap Ring	#101	3
14.	3/32" Aluminum Pop Rivet	40APR1/4	6
15.	1/4 Turn Receptacle	#302	3
16.	Baggage Frame Bottom Tube	KPFU0004	1
17.	5/8" Cushioned Tube Clamp	MS21919-DG10	2
18.	AFT Baggage Compartment	AFT-BAG	1
19.	Strap **	AFT-BAG-STRAP	0
20.	3/16" Bolt	AN3-5A	2
21.	3/16" Large Washer	AN970-3	2
22.	Foam Rubber Strip, 3/8" x 3/16"	WS-FS	1 rls
23.	3/16" Thin Washer	AN960-10L	4

*Builder cuts into 2 equal lengths.
**Supplied with Bag.

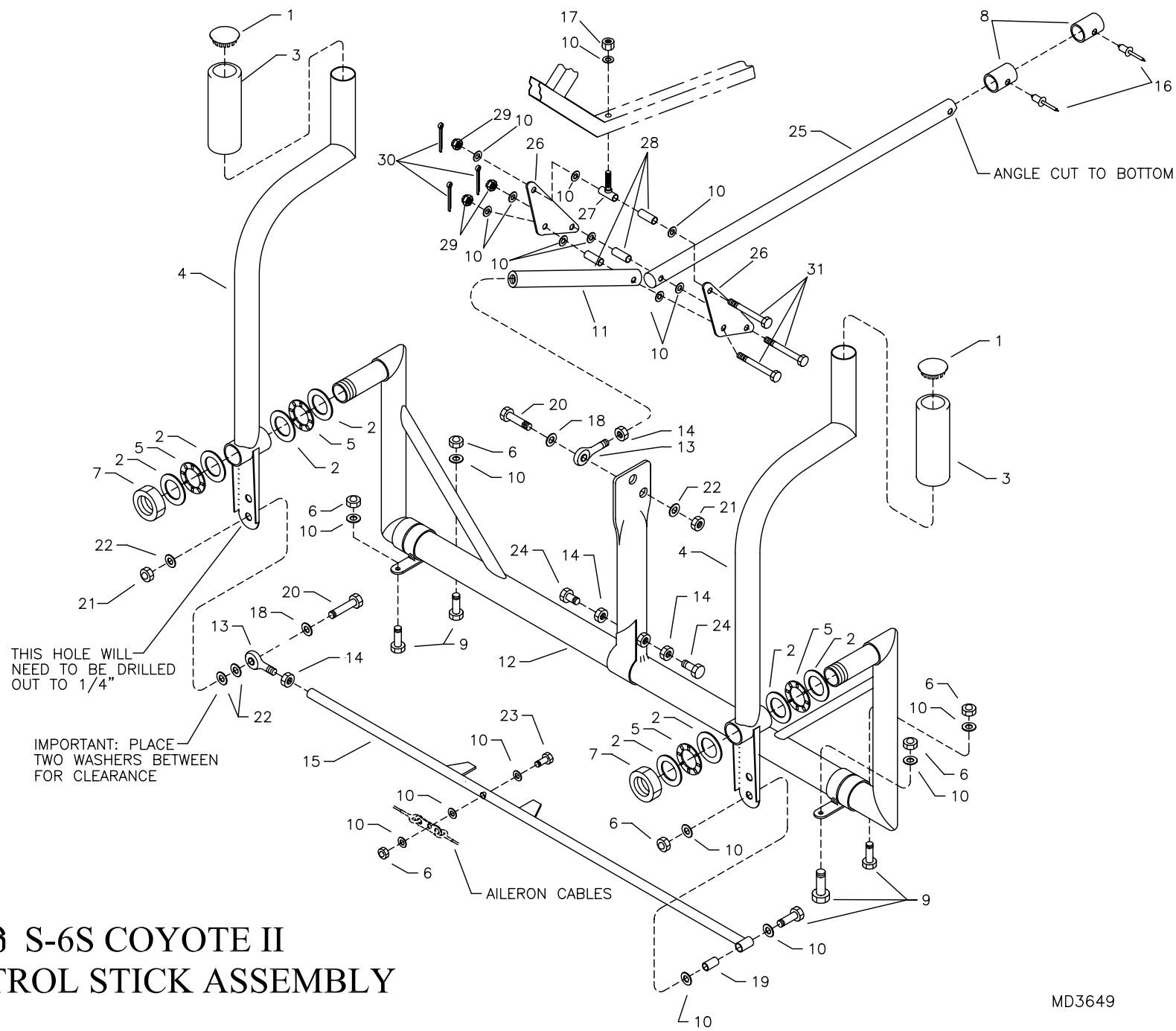

RANS S-6S COYOTE II
CONTROL STICK ASSEMBLY

S-6S COYOTE II - CONTROL STICK

#	DESCRIPTION	PART NUMBER	QUANTITY
1.	7/8" End Cap	CS-EC	2
2.	Bearing Washer	CS-BW	8
3.	Control Stick Grip	CS-G	2
4.	Control Stick	CS-CS-A	2
5.	Thrust Bearing	CS-TB	4
6.	3/16" Shear Nut	AN364-1032A	6
7.	3/4" Nyloc Nut	CS-3/4LOCNUT	2
8.	Aluminum Stop Sleeve, 3/4" x .058 x 3/4" *	KAAC0004-3	0
9.	3/16" Bolt	AN3-10A	5
10.	3/16" Thin Washer	AN960-10L	20
11.	5/8" Push Pull Tube, 12"	KPCS0136	1
12.	Control Stick Torque Tube	CS-TT-A	1
13.	Male Rod End, 1/4" x 1/4"	NM-4	2
14.	1/4" Plain Nut	AN345-416	4
15.	Control Stick Link Tube	CS-CSLT-3	1
16.	1/8" Stainless Steel Pop Rivet - Cherry Q	CCPQ-42	2
17.	3/16" Tensile Nut	AN365-1032A	1
18.	1/4" Plastic Washer	PW-4	2
19.	Aluminum Bushing, 1/4" x .028 x 17/32" *	KAAC0004-4	0
20.	1/4" Bolt	AN4-10A	2
21.	1/4" Shear Nut	AN364-428A	2
22.	1/4" Thick Washer	AN960-416	4
23.	3/16" Bolt	AN3-12A	1
24.	1/4" Plain Bolt	1/4X1 BOLT	2
25.	5/8" Push Pull Tube, 32"	KPCS0137	1
26.	Side Plate	KPAC0154	2
27.	Flap Pivot/Bushing, Bolt	KPCS0138	1
28.	Aluminum Bushing, 1/4" x .028 x 5/8" *	KAAC0004-4	0
29.	3/16" Castle Nut	AN310-3	3
30.	Small Cotter Pin	MS24665-134	3
31.	3/16" Bolt	AN3-12	3

*Builder must fabricate from raw stock.

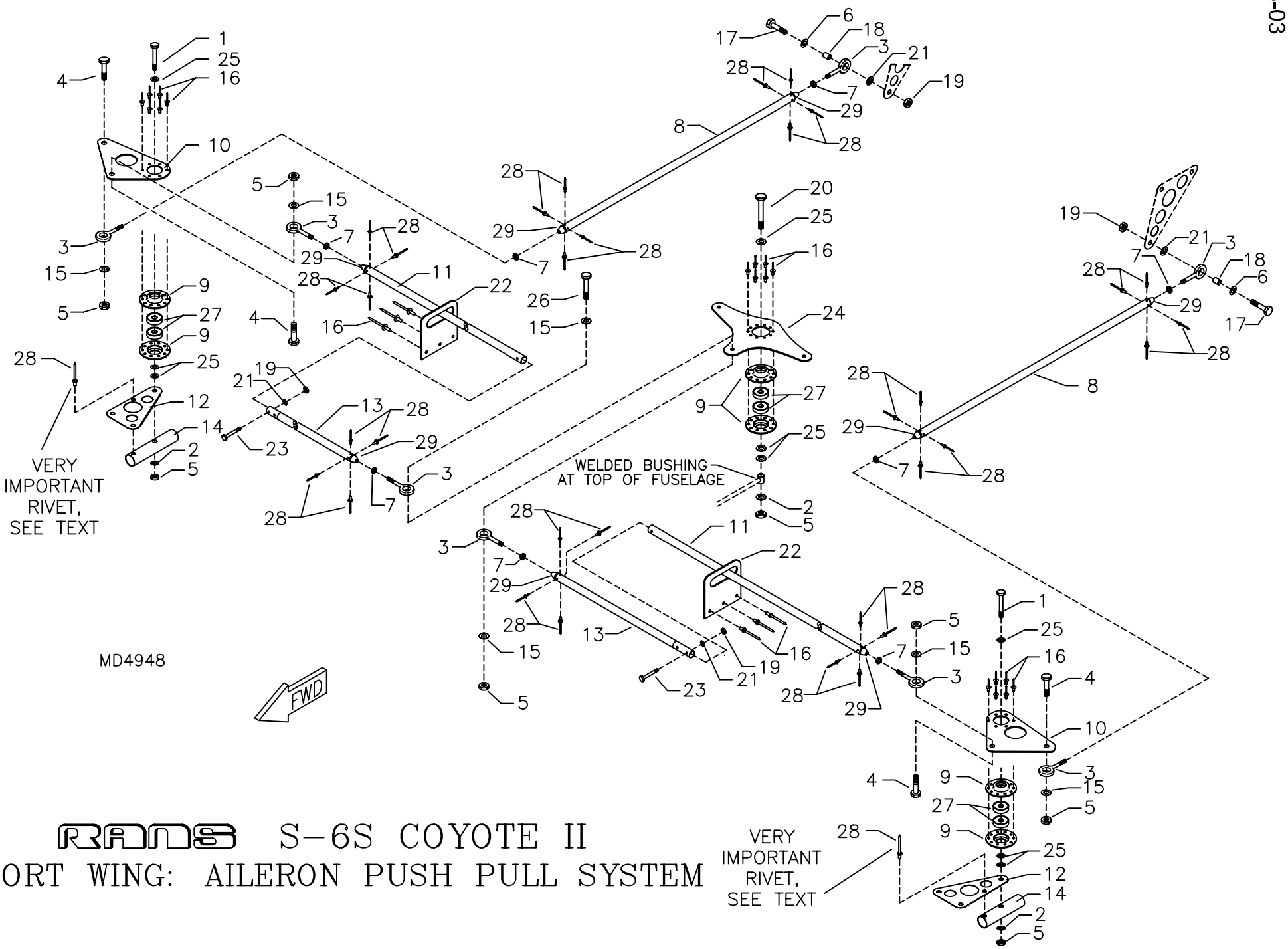

RANS S-6S COYOTE II
SPORT WING: AILERON PUSH PULL SYSTEM

S-6S COYOTE II - SPORT WING - AILERON PUSH PULL SYSTEM

#	DESCRIPTION	PART NUMBER	QUANTITY
1 .	1/4" Bolt	AN4-22A	2
2 .	1/4" Thin Washer	AN960-416L	3
3 .	Male Rod End, 1/4" x 1/4"	NM-4	8
4 .	1/4" Bolt	AN4-7A	4
5 .	1/4" Shear Nut	AN364-428A	8
6 .	#10 SS Washer	BSHW0022	2
7 .	1/4" Plain Nut	AN345-416	8
8 .	Aileron Push Pull Tube	KPAL0096	2
9 .	Bearing Flange	BR-FLNG	6
10 .	Bell Crank	AIL-2/1BC	2
11 .	Aileron Push Pull Tube	KPWI0474	2
12 .	Bell Crank Gusset - LH**	CS-BELGU-LH	1
12 .	Bell Crank Gusset - RH**	CS-BELGU-RH	1
13 .	Aileron Push-Pull Tube, 18"	CS-18PPT	2
14 .	Compression Tube Doubler**	CS-CTD	2
15 .	1/4" X 5/8" Zinc Plated Washer	KSHW0075	6
16 .	1/8" Aluminum Rivet - Cherry Q	AAPQ-44	24
17 .	3/16" Bolt	AN3-6A	2
18 .	Aluminum Bushing, 1/4" x .028 x 3/8" *	KAAC0004-4	0
19 .	3/16" Shear Acorn Nut	22NKM02	4
20 .	1/4" Bolt	AN4-17A	1
21 .	3/16" Thick Washer	AN960-10	4
22 .	Push-Pull Tube Guide	KPCS0150	2
23 .	3/16" Bolt	AN3-12A	2
24 .	Control Stick Tee	CS-TEE-B	1
25 .	1/4" Thick Washer	AN960-416	9
26 .	1/4" Bolt	AN4-12A	1
27 .	Bearing	SR4APP	6
28 .	1/8" Stainless Steel Rivet - Cherry Q	CCPQ-42	34
29 .	Push Pull Tube End Fitting	CS-3/4PTEF	8

*Builder must fabricate from raw stock.
**Referenced from the Wing Internal Brace Tube section.

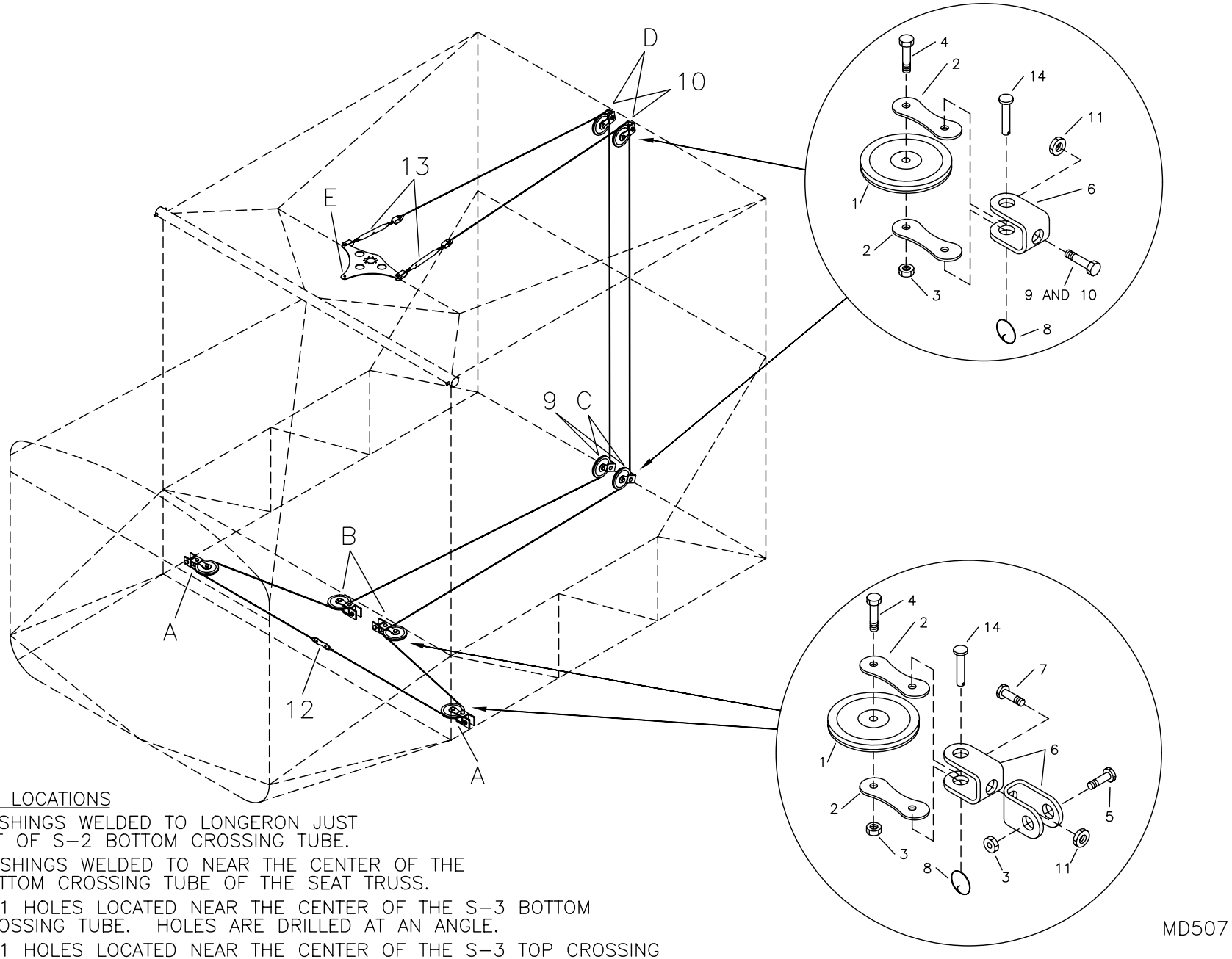

PULLEY LOCATIONS

A. BUSHINGS WELDED TO LONGERON JUST AFT OF S-2 BOTTOM CROSSING TUBE.

B. BUSHINGS WELDED TO NEAR THE CENTER OF THE BOTTOM CROSSING TUBE OF THE SEAT TRUSS.

C. #11 HOLES LOCATED NEAR THE CENTER OF THE S-3 BOTTOM CROSSING TUBE. HOLES ARE DRILLED AT AN ANGLE.

D. #11 HOLES LOCATED NEAR THE CENTER OF THE S-3 TOP CROSSING TUBE. HOLES ARE DRILLED AT AN ANGLE.

E. CONTROL TEE. SEE PUSH PULL TUBES.

RANS S-6ES/S-6S/S-6XL COYOTE II
AILERON CABLE SYSTEM

S-6S COYOTE II - AILERON CABLES

#	DESCRIPTION	PART NUMBER	QUANTITY
1.	Pulley	AN210-2A	8
2.	Hummertang	T12-HT6	16
3.	3/16" Shear Nut	AN364-1032A	12
4.	3/16" Bolt	AN3-6A	8
5.	3/16" Bolt	AN3-7A	4
6.	Shackle	RL-205-T	12
7.	3/16" Bolt	AN3-3A	4
8.	Loc Ring	RL 27 1/4	8
9.	3/16" Bolt	AN3-11A	2
10.	3/16" Bolt	AN3-12A	2
11.	3/16" Tensile Nut	AN365-1032A	8
12.	Aileron Cables	S6ES-AIL-CAB-PPT-B	1
13.	Turnbuckle	RL-335-AT	2
14.	Clevis Pin	MS20392-2C17	8

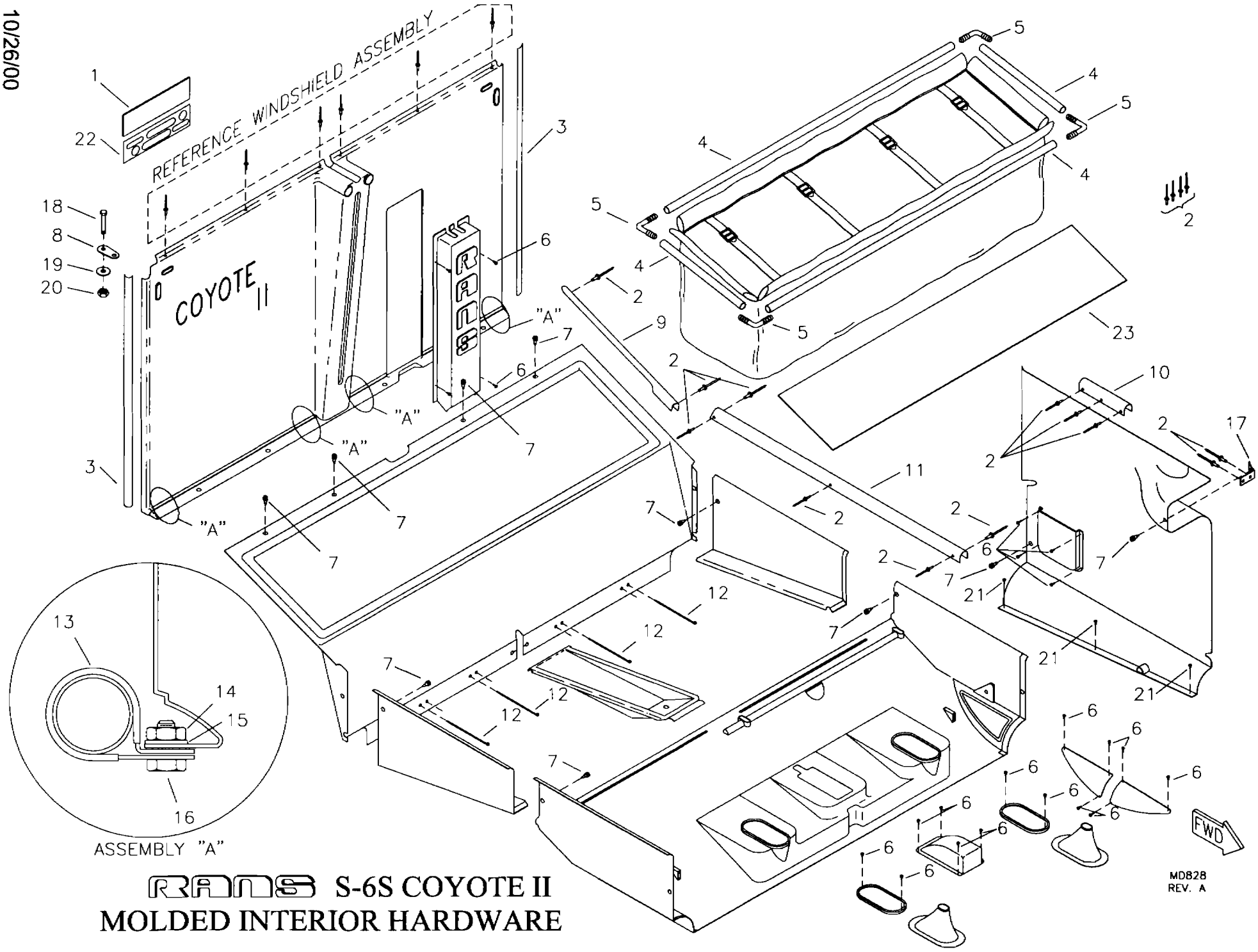

RANS S-6S COYOTE II
MOLDED INTERIOR HARDWARE

S-6S COYOTE II - MOLDED INTERIOR HARDWARE

#	DESCRIPTION	PART NUMBER	QUANTITY
1 .	Rubber Strip	RS9805	2 ft
2 .	1/8" Aluminum Pop Rivet - Cherry Q	AAPQ-42	40
3 .	Acrylic Foam Tape **	-----	0
4 .	Baggage Mount Frame Tube, 1/2" x .035 x X" *	KAAC0004-10	0
5 .	Plastic 90	5002830	4
6 .	#4 Thread Rolling Screw	PPP4-38Z	22
7 .	Screw Rivet	M60-0580-01	14
8 .	Seat Belt Tang Extension	KPIN0020	2
9 .	AFT Capture Strip, R	KPIN0016-R	1
9 .	AFT Capture Strip, L	KPIN0016-L	1
10 .	Panel Retainer	KPIN0017	2
11 .	FWD Capture Strip, R	KPIN0018-R	1
11 .	FWD Capture Strip, L	KPIN0018-L	1
12 .	Long Plastic Zip Ties	LONG ZIP TIES	4
13 .	5/8" Cushioned Tube Clamp	MS21919-DG10	4
14 .	3/16" Shear Nut	AN364-1032A	4
15 .	3/16" Plastic Washer	PW-3	4
16 .	3/16" Bolt	AN3-4A	4
17 .	Kick Panel Firewall Retainer	KPIN0019	2
18 .	1/4" Bolt	AN4-5A	2
19 .	1/4" Thick Washer	AN960-416	2
20 .	1/4" Shear Nut	AN364-428A	2
21 .	#4 Small Pan Head Screw	4X1/4 PHS	6
22 .	Interior Template	INT-TEMP	1
23 .	Baggage Compartment Bottom	BAG-BOT	1

*Builder must fabricate from raw stock. Cut to length, see text.
** Builder Supplied

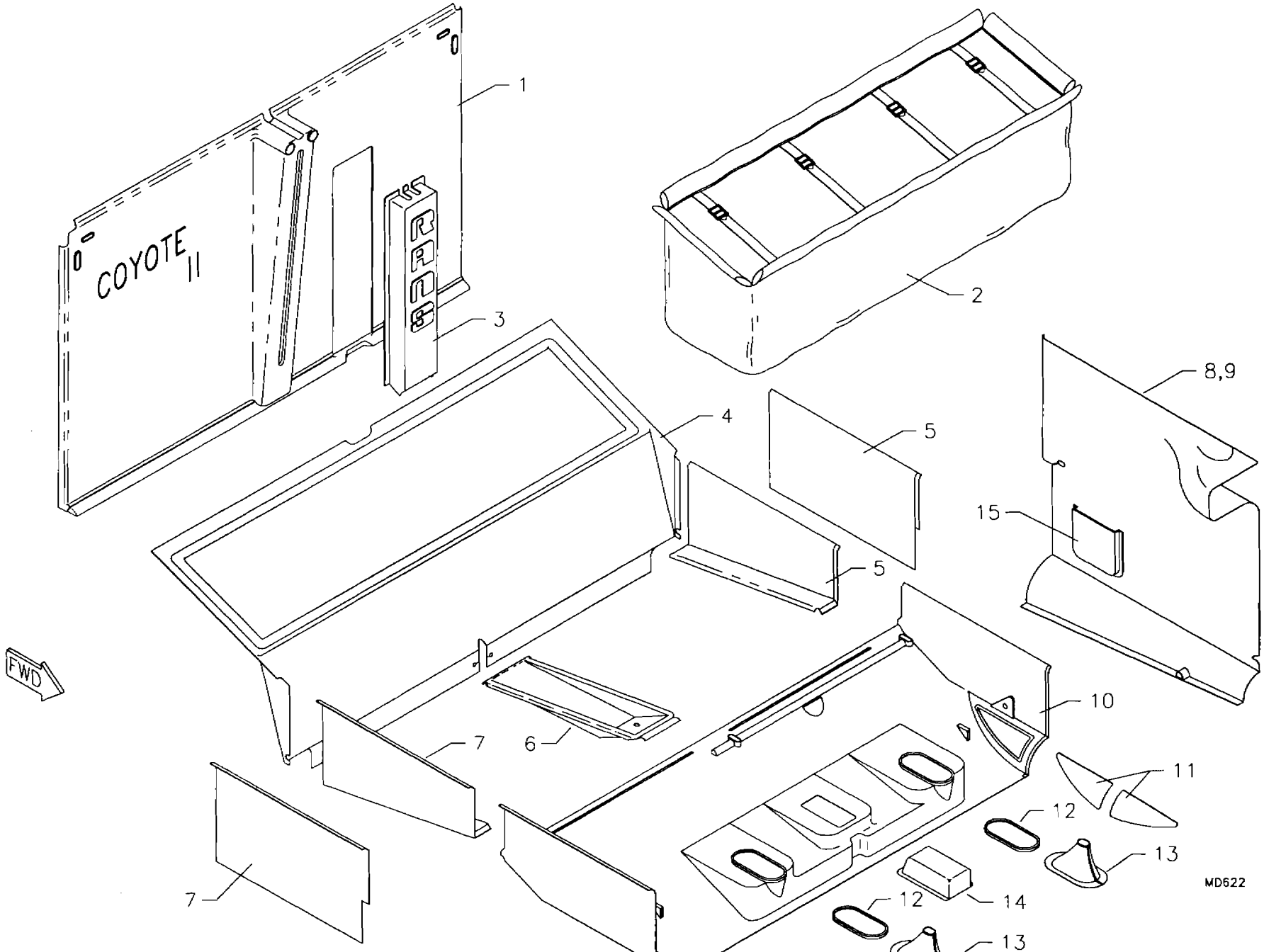

RANS S-6S COYOTE II
MOLDED INTERIOR ASSEMBLY

S-6S COYOTE II - MOLDED INTERIOR ASSEMBLY

#	DESCRIPTION	PART NUMBER	QUANTITY
1.	Interior Panel, Back Panel	KPIN0001	1
2.	Interior Baggage Compartment	KPIN0002	1
3.	Interior Panel Flap Teleflex Cover	KPIN0003	1
4.	Interior Panel Baggage Compartment	KPIN0004	1
5.	Interior Panel Seat Side, Open (STD for 6SXL)	KPIN0024	1
5.	Interior Panel Seat Side, LH	KPIN0005	1
6.	Interior Panel Seat Center	KPIN0006	1
7.	Interior Panel Seat Side, Open (STD for 6SXL)	KPIN0025	1
7.	Interior Panel Seat Side, RH	KPIN0007	1
8.	Interior Panel Kick Panel, LH	KPIN0008	1
9.	Interior Panel Kick Panel, RH	KPIN0009	1
10.	Interior Panel Control Stick	KPIN0010	1
11.	Interior Panel Inspection Panel Cover	KPIN0011	1
12.	Interior Panel Boot Retainer	KPIN0012	2
13.	Control Stick Boot	KPIN0013	2
14.	Interior Panel Torque Tube Inspection Cover	KPIN0014	1
15.	Interior Panel Log Pocket	KPIN0023	1

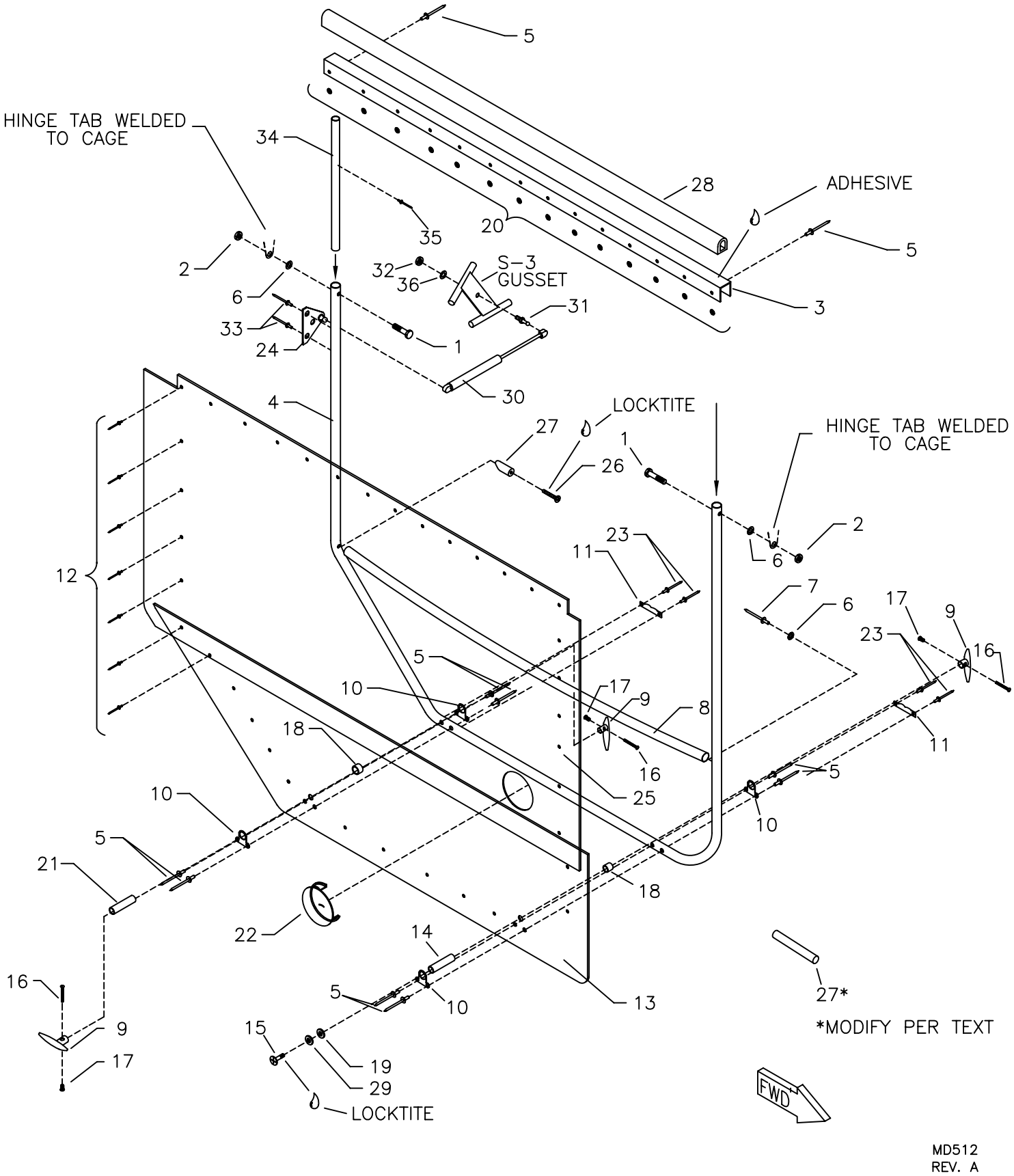

RANS S-6S COYOTE II
DOOR ASSEMBLY

S-6S COYOTE II - DOOR ASSEMBLY

#	DESCRIPTION	PART NUMBER	QUANTITY
1.	3/16" Bolt	AN3-10A	4
2.	3/16" Shear Nut	AN364-1032A	4
3.	Door Top Channel	D-TC-ES	2
4.	Door Frame	D-FRAME-ES	2
5.	1/8" Stainless Steel Pop Rivet - Cherry Q	CCPQ-42	20
6.	3/16" Thick Washer	AN960-10	6
7.	3/16" Aluminum Pop Rivet - Cherry Q	AAPQ-62	2
8.	Door Rib	D-RIB-B	2
9.	Door Handle	KPDR0026	6
10.	Door Handle Gusset	D-DHG	8
11.	Door Rub Block **	D-RB	4
12.	1/8" Aluminum Pop Rivet - Avex	1691-0410	112
13.	Door Lexan - Lower	KPDR0100	2
14.	Aluminum Bushing, 3/8" x .095 x 1 1/4" *	KAAC0004-13	0
15.	Button Head Cap Screw (M5 x .8mm)	BSHW0010	2
16.	Button Head Screw	KSHW0024	6
17.	Flange Nut	KSHW0025	6
18.	Aluminum Bushing, 1/2" x .058 x 5/8" *	KAAC0004-9	0
19.	3/16" Plastic Washer	PW-3	4
20.	1/8" Small Brass Washer	AN960-B4	28
21.	Aluminum Bushing, 3/8" x .095 x 2" *	KAAC0004-13	0
22.	Air Vent	AIR-VENT	2
23.	1/8" Stainless Steel Pop Rivet - Cherry Q	CCPQ-45	8
24.	Flat Bracket w/ .39 Ball	KSHW0077	2
25.	Door Lexan - Upper	KPDR0099	2
26.	Stainlesss Steel Panhead Screw	SS-SCREW-#10X1	2
27.	Door Rib Retainer ***	KPDR0101	1
28.	Foam Seal - "D-Cell"	KSAC0013	41 in
29.	3/16" Thin Washer	AN960-10L	2
30.	Gas Spring	KSHW0078	2
31.	Ball Stud	KSHW0021	2
32.	5/16" Loc-Nut - Course	KSHW0022	2
33.	3/16" Stainless Steel Rivet - Cherry Q	CCPQ-64	4
34.	Aluminum Doubler - Door	KPDR0103	2
35.	3/32" Aluminum Rivet	40APR1/8	2
36.	5/16" Thick Washer	AN960-516	2

*Builder must fabricate from raw stock.
**Rivets to Fuselage Door Frame after installation of Interior.
***Builder modifies, refer to text.

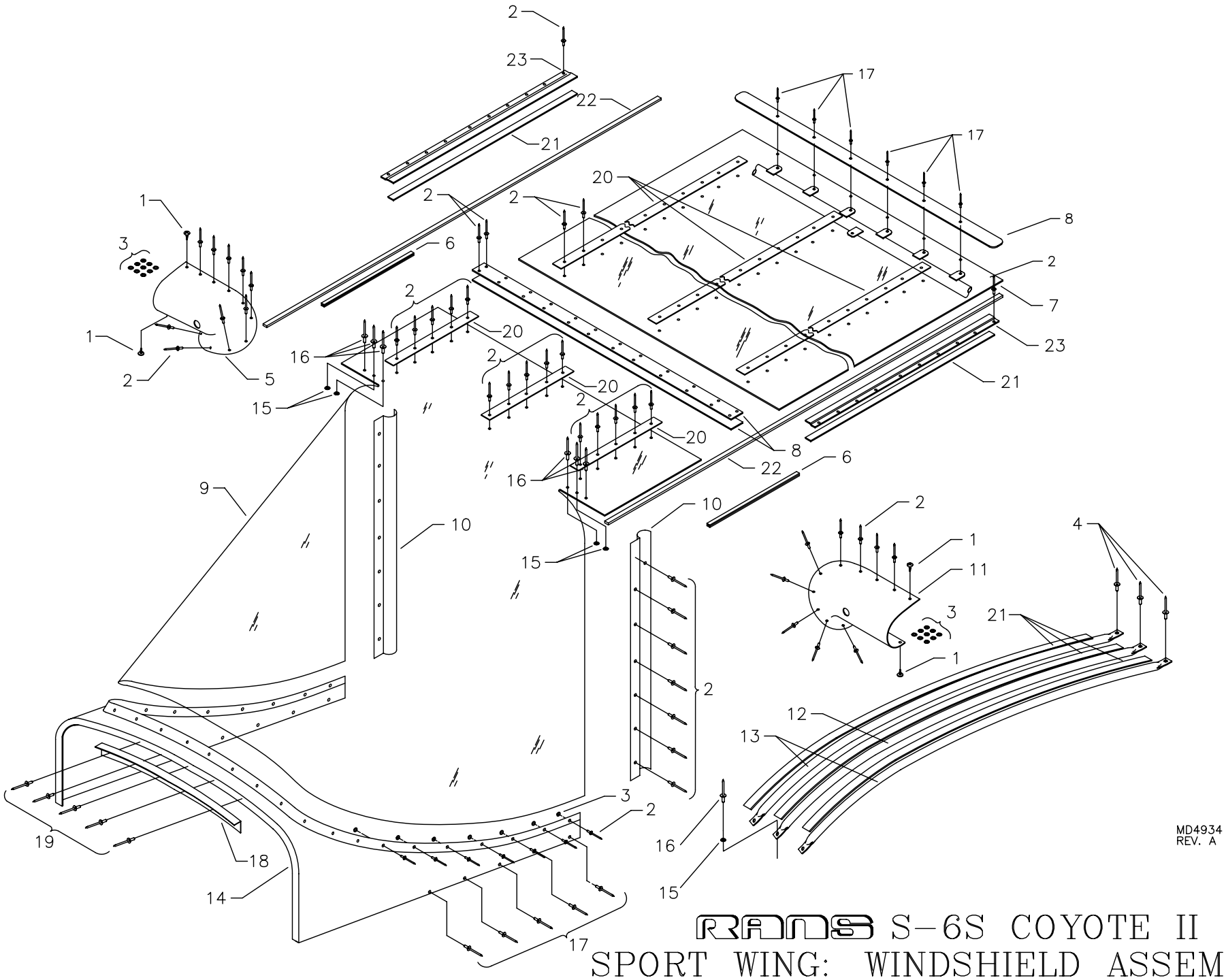

RANS S-6S COYOTE II
SPORT WING: WINDSHIELD ASSEMBLY

S-6S COYOTE II - SPORT WING: WINDSHIELD ASSEMBLY

#	DESCRIPTION	PART NUMBER	QUANTITY
1.	#8 Pan Head Screw	8X1/2 PHS	4
2.	1/8" Aluminum Pop Rivet - Cherry Q	AAPQ-42	151
3.	1/8" Small Brass Washer	AN960-B4	41
4.	3/16" Stainless Steel Pop Rivet - Cherry Q	CCPQ-64	3
5.	RH Wing Cuff	WS-CUFF-RH-ES	1
6.	Rubber Trim	X1011	30 in
7.	Skylight (Clear)	KPWS0032	1
8.	Mating Strip	WS-WSSLS	3
9.	S-6S Lexan Windshield .090	KPWS0001	1
10.	Windshield Attach "Z"	KPWS0002	2
11.	LH Wing Cuff	WS-CUFF-LH-ES	1
12.	Middle Rib	KPWI0495	1
13.	Outer Rib	KPWI0496	2
14.	Windshield Deck	WS-DECK	1
15.	3/16" Plastic Washer	PW-3	5
16.	3/16" Aluminum Pop Rivet - Cherry Q	AAPQ-64	6
17.	1/8" Aluminum Pop Rivet - Cherry Q	AAPQ-44	16
18.	Cowling Hold Down Strip	S1-CHDS-ES	1
19.	1/8" Stainless Steel Pop Rivet - Cherry Q	CCPQ-45	5
20.	Skylight Trim Strip	KPWS0010	3
21.	1/2" Black Foam Tape	KSAC0021	15 ft
22.	Foam Strip, 3/8" x 1/2"	3/8-FS	96 in
23.	Skylight Hold Down Strip	KPWS0033	2

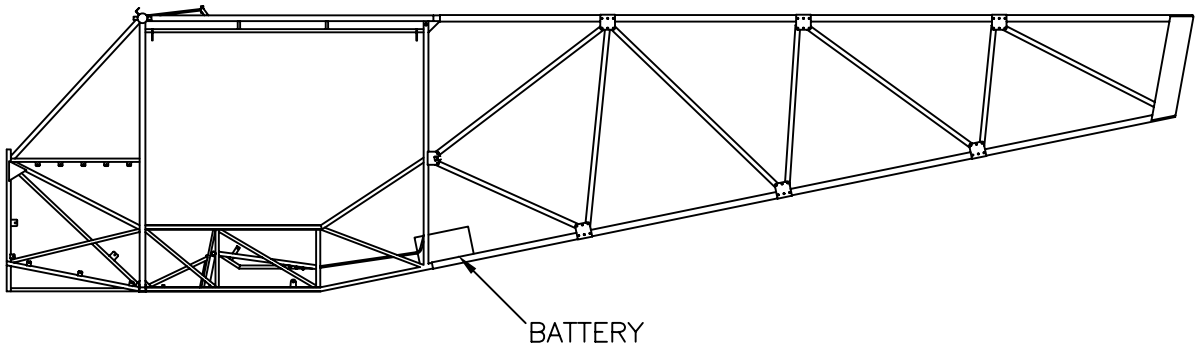

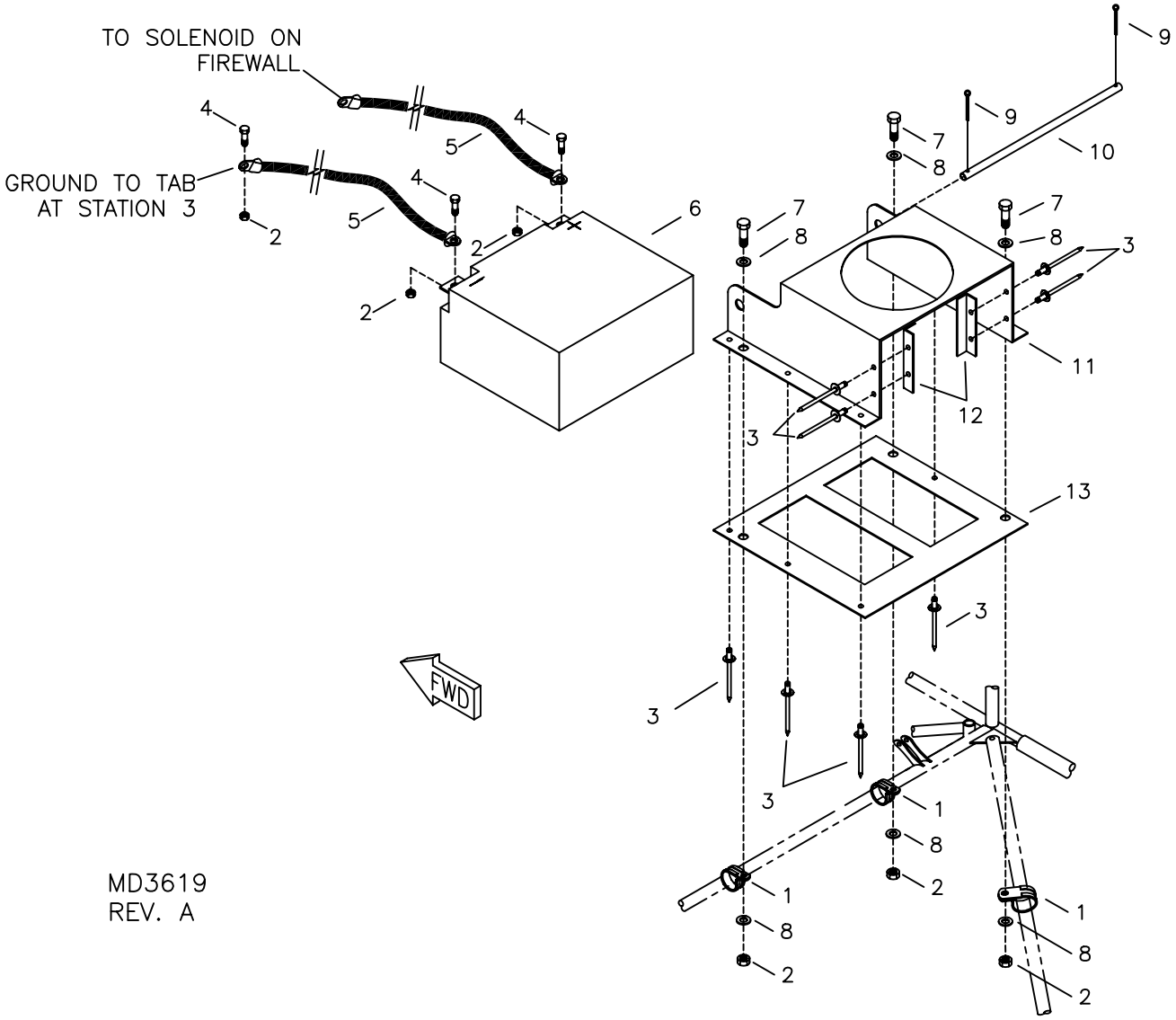

RANS S-6S COYOTE II
912 BATTERY BOX INSTALLATION

S-6S COYOTE II - 912/912S BATTERY BOX INSTALLATION

#	DESCRIPTION	PART NUMBER	QUANTITY
1 .	3/4" Cushioned Tube Clamp	MS21919-DG12	3
2 .	3/16" Shear Nut	AN364-1032A	5
3 .	1/8" Aluminum Pop Rivet - Cherry Q	AAPQ-42	11
4 .	3/16" Bolt	AN3-4A	3
5 .	Battery Cables *	-----	0
6 .	Battery **	PS12150-NB	0
7 .	3/16" Bolt	AN3-3A	3
8 .	3/16" Thin Washer	AN960-10L	6
9 .	Small Cotter Pin	MS24665-134	2
10 .	Battery Bar	BAT-BAR-503/582	1
11 .	Battery Box Front Plate	BAT-BOX-1	1
12 .	Battery Box Support Angle	BAT-BOX-3	2
13 .	Battery Box Mount Plate	BAT-BOX-2	1

* Refer to 912 Instruments and Electrical
** May be purchased seperately
NOTE: Verify battery location by calculating C.G.

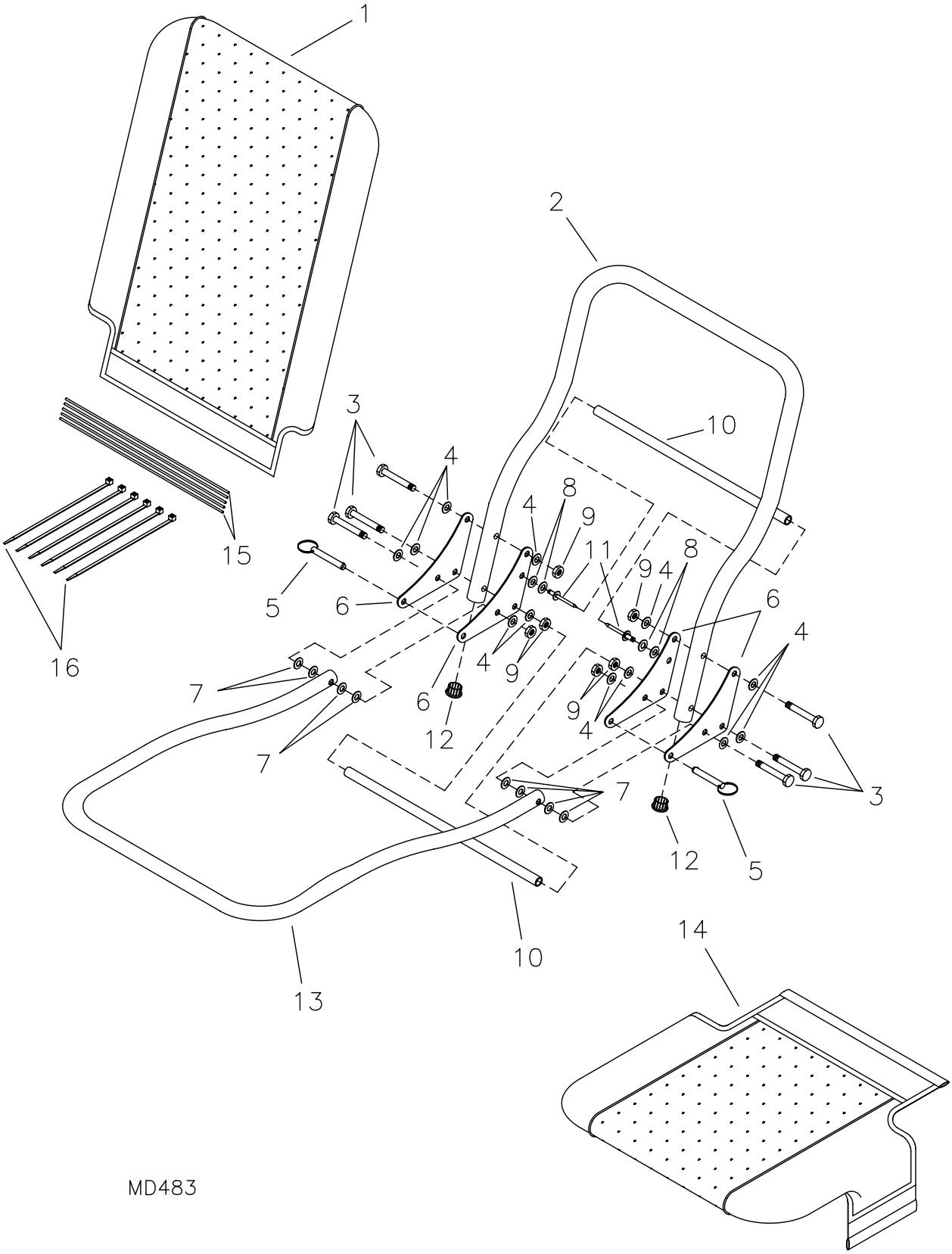

RANS S-6ES/S-6S COYOTE II
SEAT ASSEMBLY

S-6S COYOTE II - SEAT

#	DESCRIPTION	PART NUMBER	QUANTITY
1.	Seat Back Cover	ST-SBC-A	2
2.	Seat Back Frame	ST-SBF	2
3.	3/16" Bolt	AN3-14A	12
4.	3/16" Thin Washer	AN960-10L	24
5.	1/4" Quick Pin	PIN 1/4X1.2	4
6.	Seat Back Gusset	ST-GUS	8
7.	3/16" Plastic Washer	PW-3	16
8.	3/16" Thick Washer	AN960-10	8
9.	3/16" Shear Nut	AN364-1032A	12
10.	Seat Internal Tube, 1/2" x .035 x X *	KAAC0004-10	0
11.	3/16" Aluminum Pop Rivet - Cherry Q	AAPQ-64	4
12.	7/8" End Cap **	CS-EC	4
13.	Seat Bottom Frame	KPST0001	2
14.	Seat Bottom Cover, LH/RH	ST-SBTC-A	2
15.	Lacing Wires (stick), 36" x 1/16"	TG-LW-1/16	5
16.	Long Plastic Zip Ties	LONG ZIP TIES	40

*Builder must fabricate from raw stock.
**Break opposing ears to clear bolt #3.

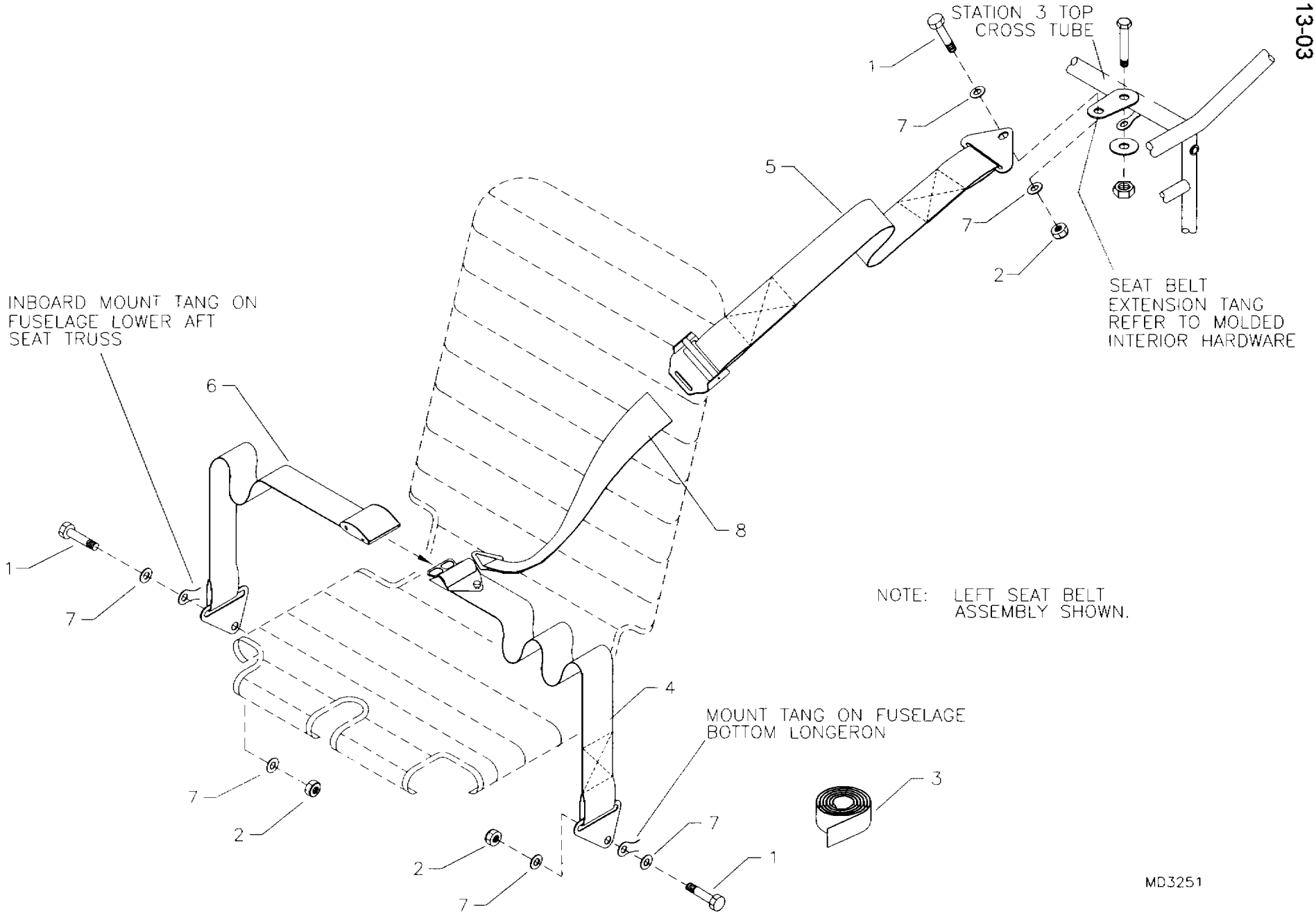

RANS S-6S COYOTE II
SEAT BELT INSTALLATION

S-6S COYOTE II - SEAT BELT SYSTEM

#	DESCRIPTION	PART NUMBER	QUANTITY
1.	1/4" Bolt	AN4-5A	6
2.	1/4" Shear Nut	AN364-428A	6
3.	Seat Belt Kit	KAST0025	1
4.	Lap Belt - Buckle Side *	KAST0025-2	0
5.	Shoulder Belt - Slider End	KAST0025-4	0
6.	Lap Belt - Clip Side *	KAST0025-1	0
7.	1/4" Thick Washer	AN960-416	12
8.	Shoulder Belt - Swivel Clip End *	KAST0025-3	0

*Supplied in Seat Belt Kit.

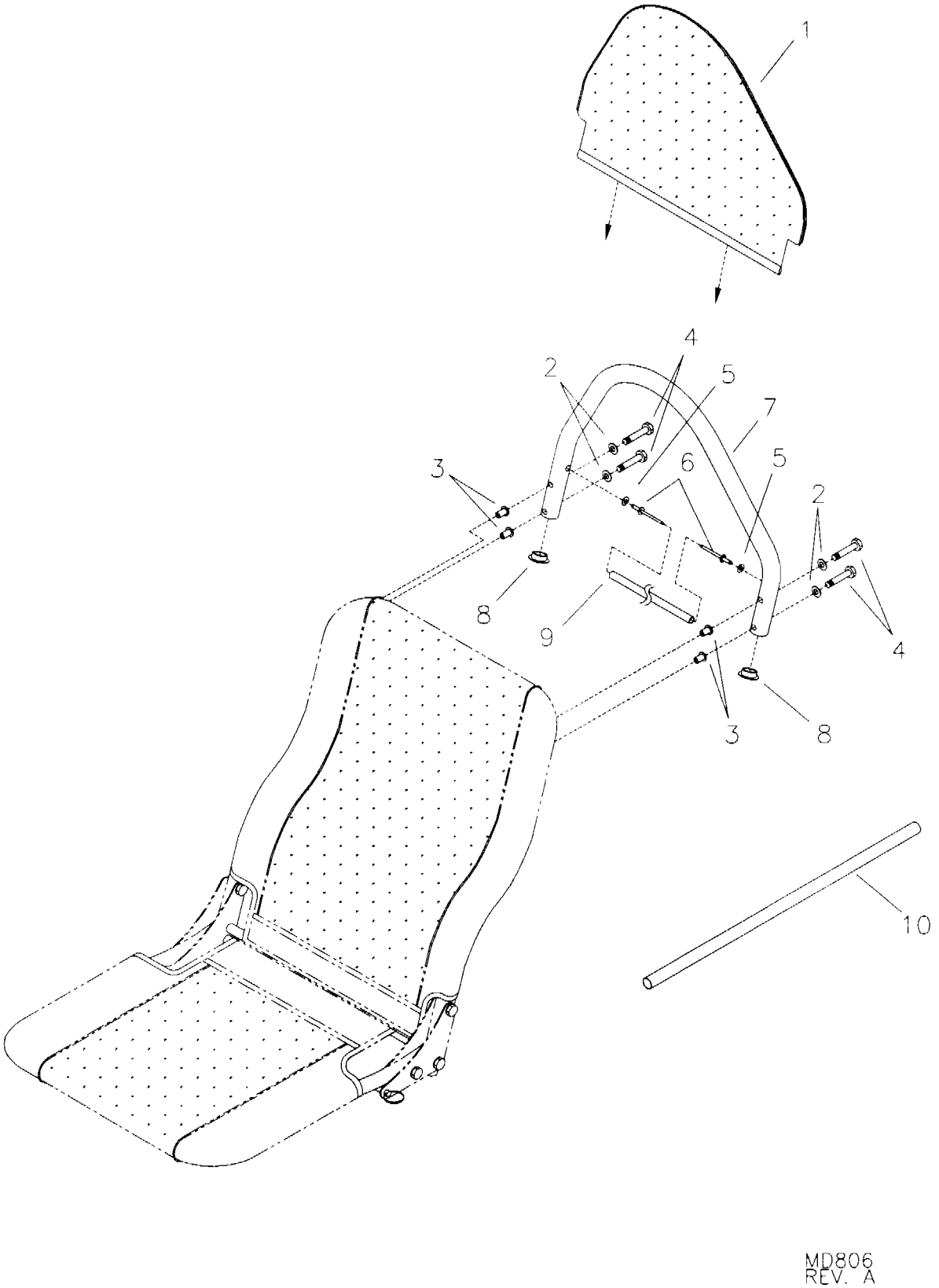

RANS S-6S COYOTE II
OPTIONAL HEADREST ASSEMBLY

S-6S COYOTE II - OPTIONAL HEADREST

#	DESCRIPTION	PART NUMBER	QUANTITY
1.	Headrest Cover	ST-HRC-A	2
2.	3/16" Thin Washer	AN960-10L	8
3.	3/16" Rivet Nut	MS27130-A25K	8
4.	3/16" Bolt	AN3-13A	8
5.	3/16" Thick Washer	AN960-10	4
6.	3/16" Aluminum Pop Rivet - Cherry Q	AAPQ-64	4
7.	Headrest Frame	ST-HRF(6/12)	2
8.	1" End Cap	1 CAP	4
9.	Headrest Internal Tube, 1/2" x .035 x X *	KAAC0014-1	0
10.	Headrest - Raw Stock Kit	KAAC0014	1

*Builder must fabricate from raw stock.

RANS S-6S COYOTE II
VERTICAL STABILIZER

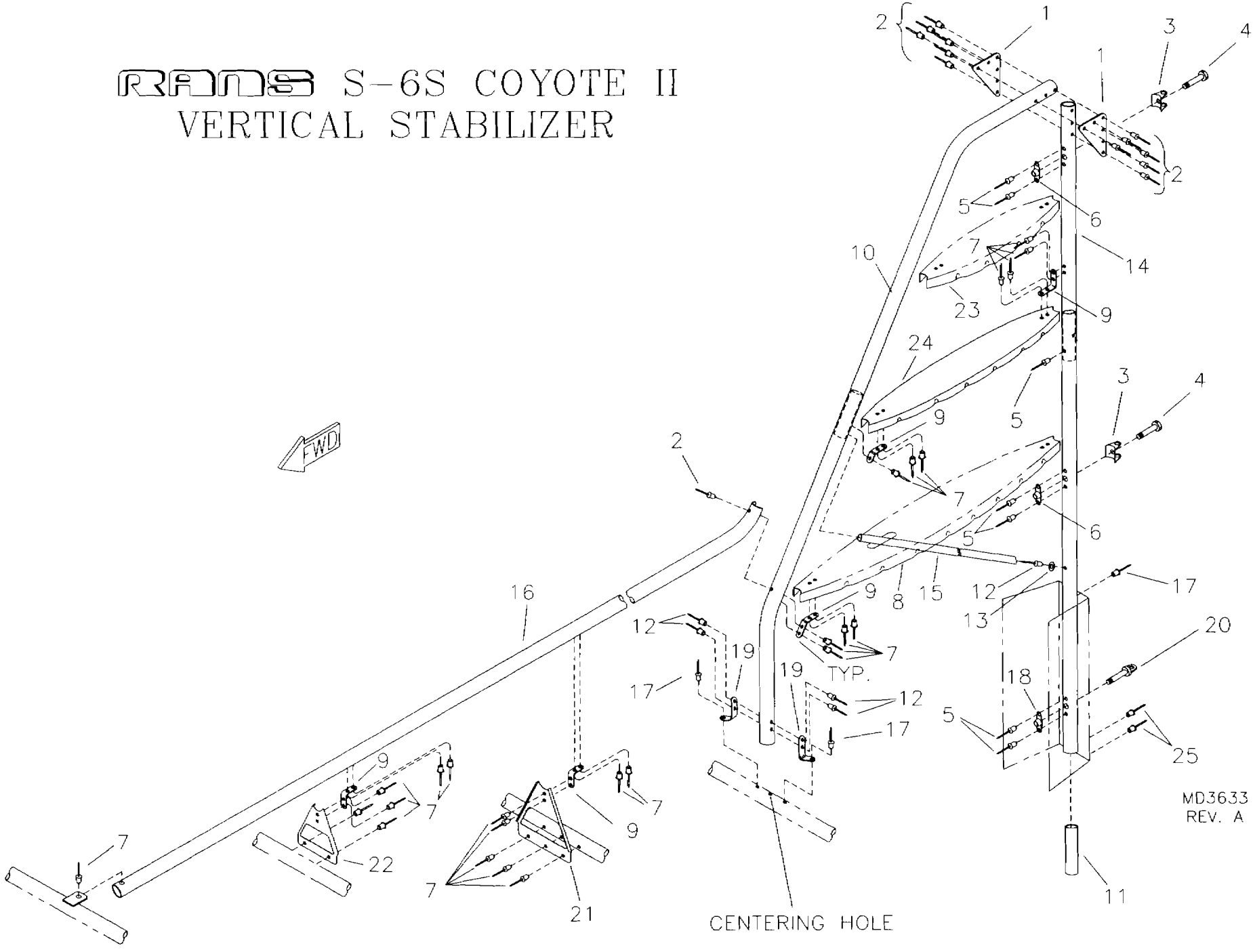

S-6S COYOTE II - VERTICAL STABILIZER

#	DESCRIPTION	PART NUMBER	QUANTITY
1.	Gusset	U-ST004	2
2.	1/8" Stainless Steel Pop Rivet - Cherry Q	CCPQ-42	14
3.	Stainless Steel Hinge	W-HB	2
4.	3/16" Bolt	AN3-13A	2
5.	3/32" Aluminum Pop Rivet	40APR1/8	7
6.	3/16" Nut Plate	K-1000-3	1
7.	1/8" Aluminum Pop Rivet - Cherry Q	AAPQ-42	37
8.	Lower Rib - Vertical Stabilizer	KPVS0037	1
9.	Attach Tang	U-ST001	8
10.	Vertical Stabilizer Leading Edge	KPVS0034	1
11.	Doubler, 7/8" x .058 x 6" *	KAAC0004-2	0
12.	3/16" Aluminum Pop Rivet - Cherry Q	AAPQ-62	5
13.	3/16" Thick Washer	AN960-10	1
14.	Vertical Stabilizer Spar	TG-VS004	1
15.	Aluminum Brace, 1/2" x .035 x X *	KAAC0004-10	0
16.	Top Stringer	KPVS0033	1
17.	3/16" Stainless Steel Pop Rivet - Cherry Q	CCPQ-64	3
18.	1/4" Nut Plate	MS21047-04	1
19.	Trim Tab Hinge	ST-16-BENT	2
20.	1/4" Eyebolt	AN43B-13A	1
21.	Top Stringer Support, S5	KPFU0258	1
22.	Top Stringer Support, S4	TG-VS008	1
23.	Upper Rib - Vertical Stabilizer	KPVS0035	1
24.	Middle Rib - Vertical Stabilizer	KPVS0036	1
25.	1/8" Stainless Steel Pop Rivet - Cherry Q	CCPQ-44	2
26.	3/16" Single Ear Nut Plate	MS21051-L3	1

*Builder must fabricate from raw stock.

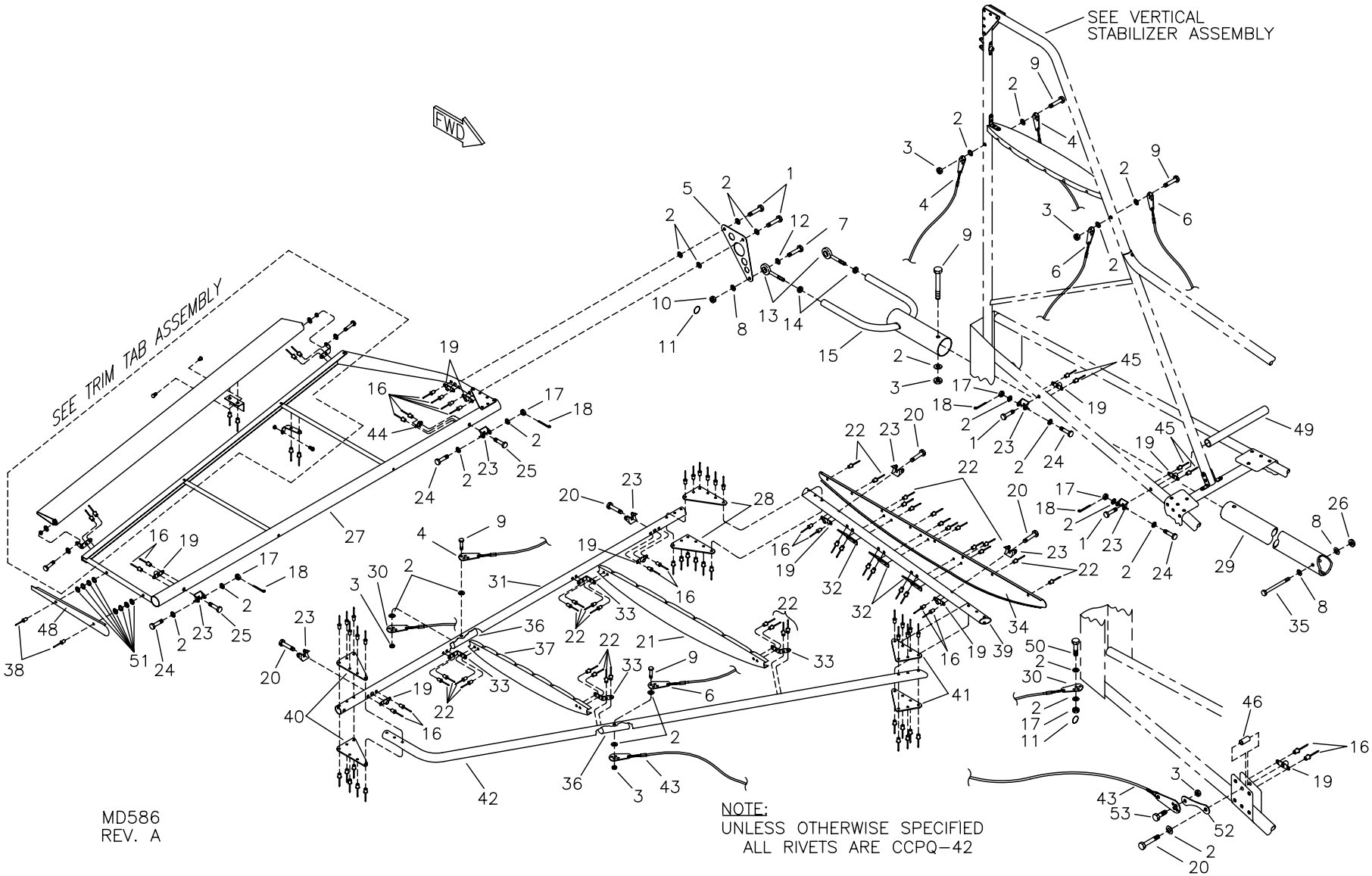

RANS S-6S COYOTE II
HORIZONTAL STABILIZER & ELEVATOR

S-6S COYOTE II - HORIZONTAL STABILIZER & ELEVATOR

#	DESCRIPTION	PART NUMBER	QUANTITY
1 .	3/16" Bolt	AN3-14A	8
2 .	3/16" Thick Washer	AN960-10	43
3 .	3/16" Tensile Nut	AN365-1032A	9
4 .	Top AFT Cable	TG-TAC-A	2
5 .	Elevator Horn	TG-EH-A	2
6 .	Top FWD Cable	TG-TFC-S	2
7 .	1/4" Bolt	AN4-10	2
8 .	1/4" Thick Washer	AN960-416	4
9 .	3/16" Bolt	AN3-15A	7
10 .	1/4" Castle Nut	AN310-4	2
11 .	Loc Ring	RL 27 1/4	4
12 .	1/4" x 5/8" Zinc Plated Washer	KSHW0075	2
13 .	Male Rod End, 1/4" x 1/4"	NM-4	2
14 .	1/4" Plain Nut	AN345-416	2
15 .	Elevator Yoke	TG-EY-ES	1
16 .	3/32" Aluminum Pop Rivet	40APR1/8	36
17 .	3/16" Castle Nut	AN310-3	10
18 .	Small Cotter Pin	MS24665-134	8
19 .	3/16" Nut Plate	K-1000-3	22
20 .	3/16" Bolt	AN3-13A	10
21 .	Horizontal Stabilizer Inner Compression Rib, RH	TG-HS006-RH	1
21 .	Horizontal Stabilizer Inner Compression Rib, LH	TG-HS006-LH	1
22 .	1/8" Aluminum Pop Rivet - Cherry Q	AAPQ-42	48
23 .	Stainless Steel Hinge	W-HB	16
24 .	3/16" Bolt	AN3-15	8
25 .	3/16" Bolt	AN3-16A	4
26 .	1/4" Shear Nut	AN364-428A	1
27 .	Elevator Assembly, RH	KAEL0001	1
27 .	Elevator Assembly, LH	KAEL0002	1
28 .	Gusset	U-ST003	4
29 .	Elevator 1 1/4" Push Pull Tube	KPCS0135	1
30 .	Lower AFT Cable	TG-LAC-A	2
31 .	Horizontal Stabilizer Spar	TG-HS001	2
32 .	Rib Brace	TG-G001	6
33 .	Attach Tang	U-ST001	8
34 .	Horizontal Stabilizer End Rib, RH	TG-HS003-RH	1
34 .	Horizontal Stabilizer End Rib, LH	TG-HS003-LH	1
35 .	1/4" Bolt	AN4-15A	1
36 .	Doubler, 7/8" x .058 x 6" *	KAAC0004-2	0
37 .	Horizontal Stabilizer Outer Compression Rib, RH	TG-HS007-RH	1
37 .	Horizontal Stabilizer Outer Compression Rib, LH	TG-HS007-LH	1
38 .	1/8" Aluminum Pop Rivet - Cherry Q	AAPQ-44	4

*Builder must fabricate from raw stock.

S-6S COYOTE II - HORIZONTAL STABILIZER & ELEVATOR - CONTINUED

#	DESCRIPTION	PART NUMBER	QUANTITY
39.	Horizontal Stabilizer Spreader Tube	TG-HS005	2
40.	Gusset	U-ST002	4
41.	Gusset	U-ST004	4
42.	Horizontal Stabilizer Leading Edge	TG-HS012	2
43.	Lower FWD Cable	KAHS0039	2
44.	3/16" Single Ear Nut Plate	MS21051-L3	2
45.	3/32" Aluminum Pop Rivet	40APR1/4	8
46.	Anti Crush Bushing, 1/4" x .028 x 3/4" *	KAAC0004-4	0
47.	1/8" Stainless Steel Pop Rivet - Cherry Q	CCPQ-42	96
48.	Elevator End Rib	TG-EL005	2
49.	Horizontal Stabiliz Compression Tube, 1/2" x .035 x X *	KAAC0004-10	0
50.	3/16" Bolt	AN3-5	2
51.	1/8" Small Brass Washer	AN960-B4	16
52.	Hummertang	T12-HT6	2
53.	3/16" Bolt	AN3-3A	2

*Builder must fabricate from raw stock.

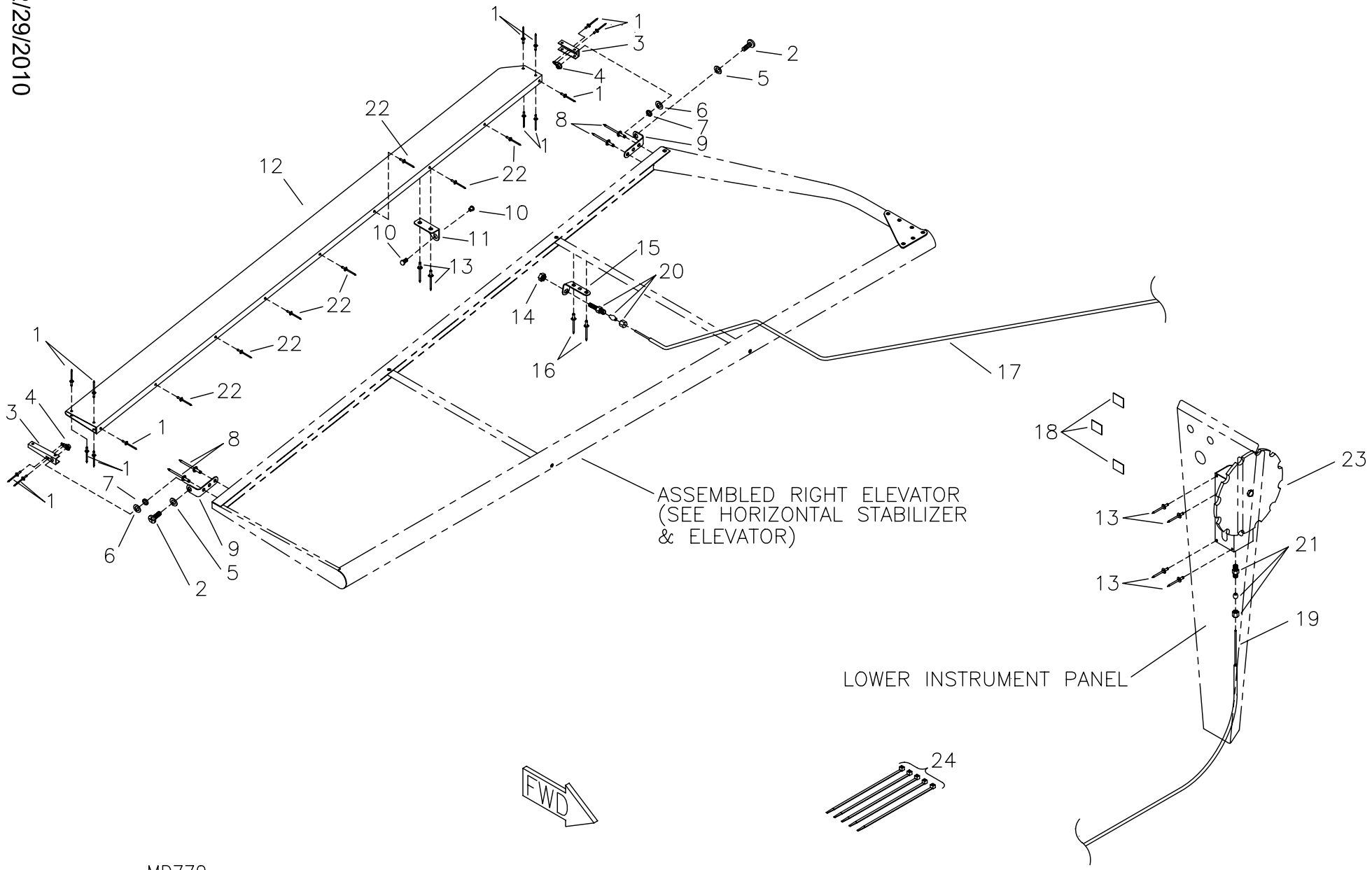

MD770
REV. B

RANS S-6S COYOTE II
TRIM TAB ASSEMBLY

S-6S COYOTE II - TRIM TAB

#	DESCRIPTION	PART NUMBER	QUANTITY
1 .	3/32" Aluminum Pop Rivet	40APR1/8	14
2 .	3/16" Truss Head Bolt	AN526-C1032R12	2
3 .	Trim Tab End Rib	KPTR0002	2
4 .	3/16" Single Ear Nut Plate	MS21051-L3	2
5 .	3/16" Thin Washer	AN960-10L	2
6 .	3/16" Thick Washer	AN960-10	2
7 .	Aluminum Bushing, 1/4" x .028 x 1/16" *	KAAC0004-4	0
8 .	3/16" Aluminum Rivet - Cherry Q	AAPQ-62	4
9 .	Trim Tab Hinge	KPAC0004	2
10 .	Wire Swivel/Screw Stop	2361	1
11 .	Trim Tab Horn	TG-EL008	1
12 .	Trim Tab	TG-EL009	1
13 .	1/8" Stainless Steel Rivet - Cherry Q	CCPQ-42	6
14 .	1/4" Shear Nut	AN364-428A	1
15 .	Trim Tab Hinge	ST-16-BENT	1
16 .	3/16" Stainless Steel Rivet - Cherry Q	CCPQ-62	2
17 .	Cable Housing	KSAC0008	25 ft
18 .	Indicator Labels **	Indi-Label	0
19 .	Trim Push Wire	TR-PW	25 ft
20 .	Conduit Adjuster Assembly	KSFS0014	1
21 .	Fitting	IMP68-3/16X1/8	1
22 .	1/8" Aluminum Rivet - Cherry Q	AAPQ-41	7
23 .	Trim Wheel Assembly	TR-WA	1
24 .	Short Black Nylon Ties	N-TIES	5

*Builder must fabricate from raw stock.

RANS S-6S COYOTE II
RUDDER ASSEMBLY

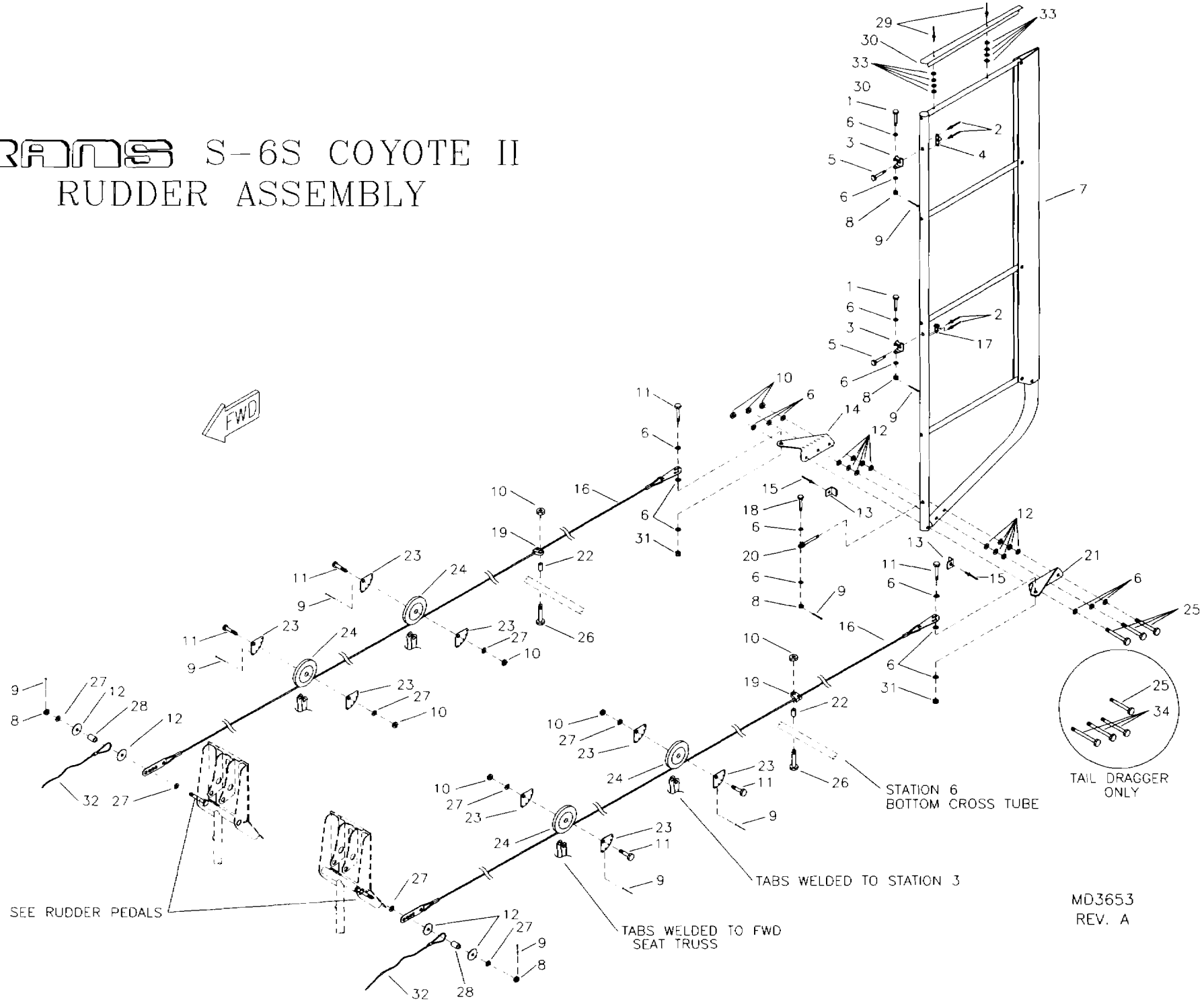

S-6S COYOTE II - RUDDER SYSTEM

#	DESCRIPTION	PART NUMBER	QUANTITY
1.	3/16" Bolt	AN3-15	2
2.	3/32" Aluminum Pop Rivet	40APR1/8	4
3.	Stainless Steel Hinge	W-HB	2
4.	3/16" Nut Plate	K-1000-3	1
5.	3/16" Bolt	AN3-16A	2
6.	3/16" Thick Washer	AN960-10	18
7.	Rudder Assembly	KARD0003	1
8.	3/16" Castle Nut	AN310-3	5
9.	Small Cotter Pin	MS24665-134	9
10.	3/16" Shear Nut	AN364-1032A	9
11.	3/16" Bolt	AN3-6A	6
12.	3/16" Plastic Washer	PW-3	16
13.	Rudder Stop	KPRD0001	2
14.	Rudder Horn, RH	TG-RHR	1
15.	1/8" Stainless Steel Pop Rivet - Cherry Q	CCPQ-42	2
16.	Rudder Cable	S6-R-CAB-S	2
17.	3/16" Single Ear Nut Plate	MS21051-L3	1
18.	3/16" Bolt	AN3-5	1
19.	Cable Guide	HA-144	2
20.	1/4" Eyebolt	AN43B-15A	1
21.	Rudder Horn, LH	TG-RHL	1
22.	Aluminum Bushing, 3/8" x .058 x 1/2" *	KAAC0004-6	0
23.	Small Pulley Cable Keeper	SP-CK	8
24.	Small Pulley	AN210-1A	4
25.	3/16" Bolt (Taildragger only)	AN3-20A	1
25.	3/16" Bolt (Trike only)	AN3-20A	3
26.	3/16" Bolt	AN3-17A	2
27.	3/16" Thin Washer	AN960-10L	8
28.	Aluminum Bushing, 1/4" x .028 x 1/4" *	KAAC0004-4	0
29.	1/8" Aluminum Pop Rivet - Cherry Q	AAPQ-44	2
30.	Rudder End Rib	TG-RD002	1
31.	3/16" Tensile Nut	AN365-1032A	2
32.	Bungee Return	KPCS0003	2
33.	1/8" Small Brass Washer	AN960-B4	8
34.	3/16" Bolt (Taildragger only)	AN3-23A	3

*Builder must fabricate from raw stock.

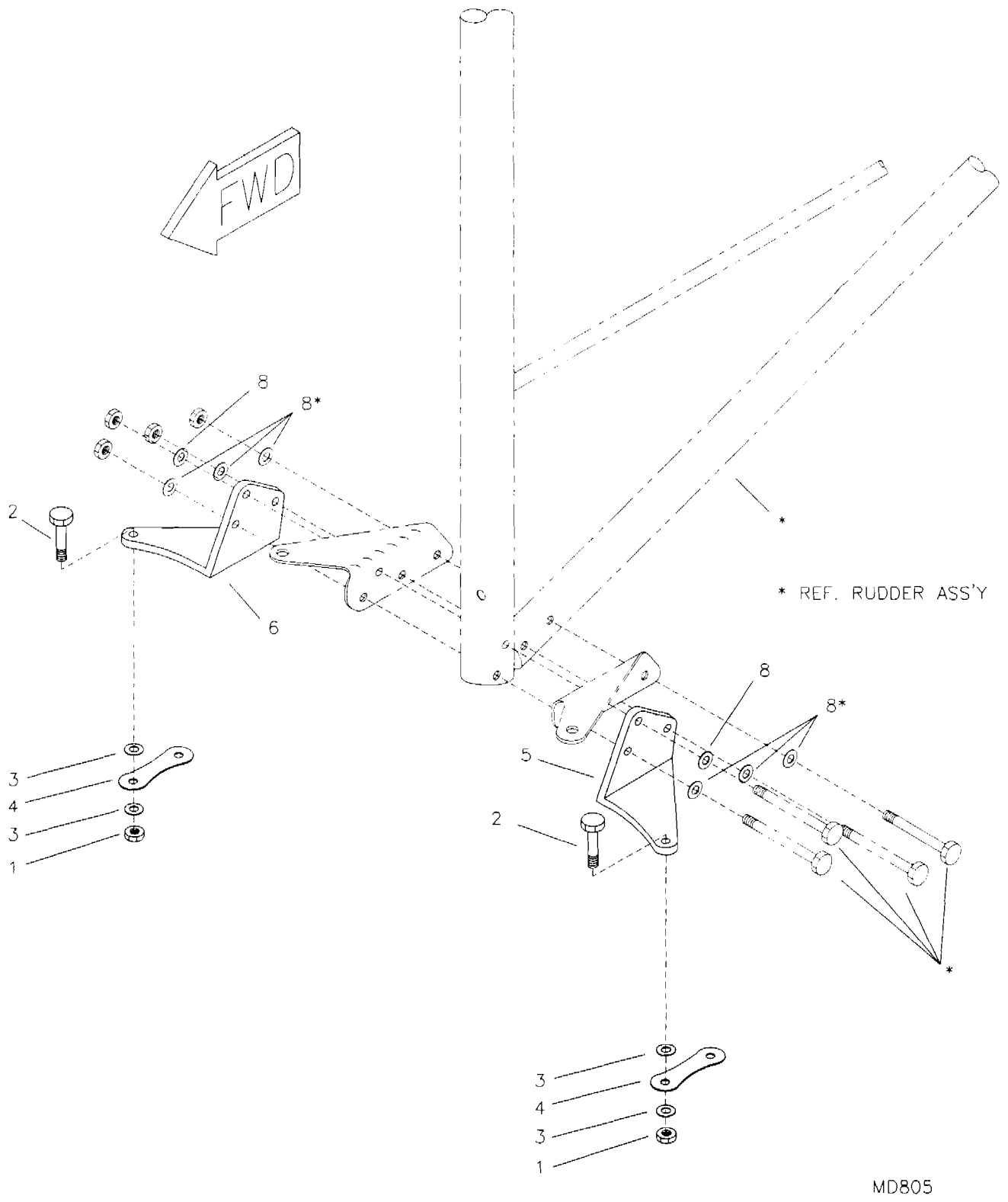

RAMS S-6S COYOTE II
TAILDRAGGER STEERING ASSEMBLY

S-6S COYOTE II - TAILDRAGGER STEER HORN

#	DESCRIPTION	PART NUMBER	QUANTITY
1.	3/16" Shear Nut	AN364-1032A	2
2.	3/16" Bolt	AN3-5A	2
3.	3/16" Thin Washer	AN960-10L	4
4.	Hummertang	T12-HT6	2
5.	Tailwheel Steerhorn - LH	KPRD0048-L	1
6.	Tailwheel Steerhorn - RH	KPRD0048-R	1

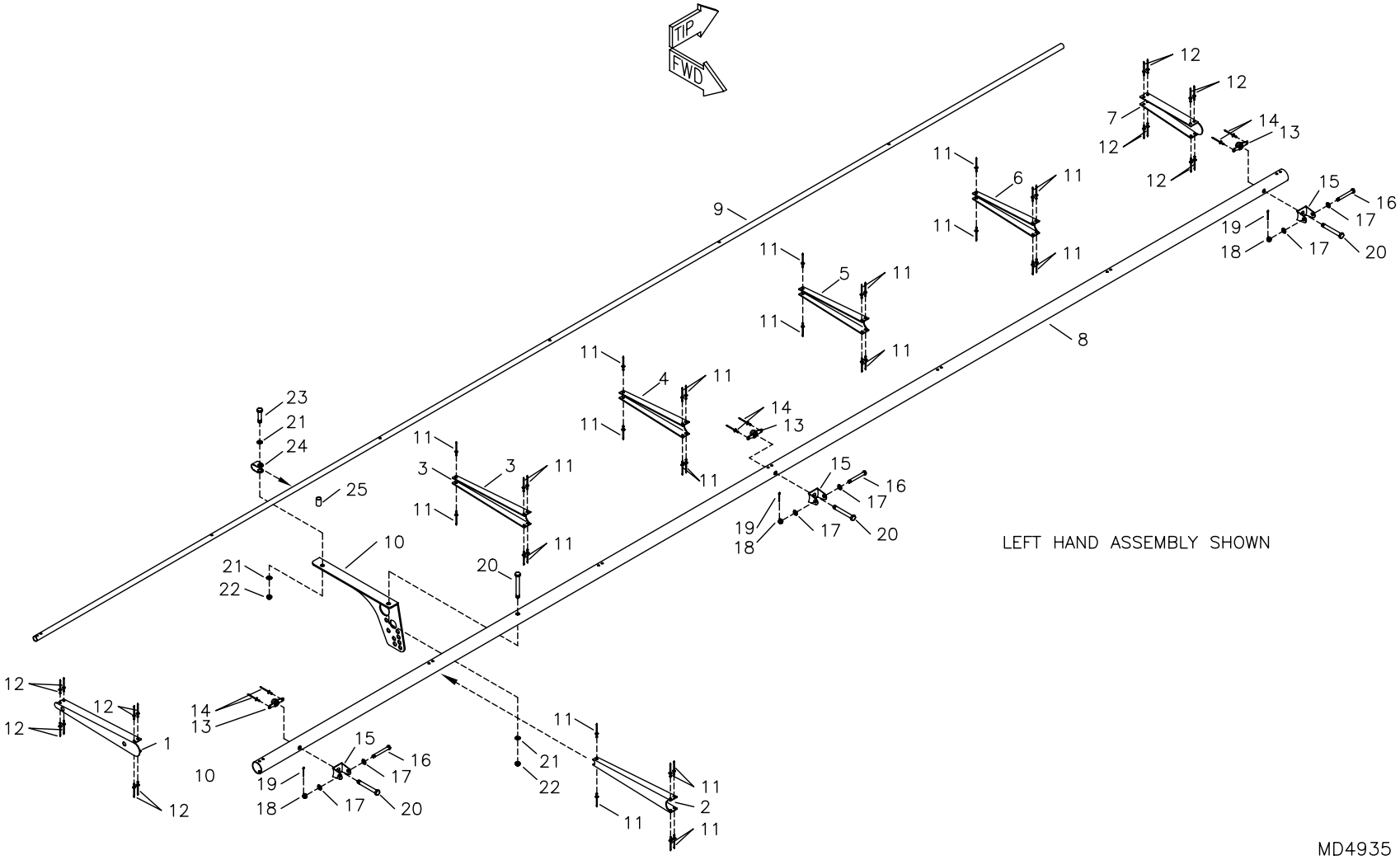

RANS S-6S COYOTE II
SPORT WING: AILERON FRAME ASSEMBLY

S-6S COYOTE II - SPORT WING: AILERON FRAME ASSEMBLY

#	DESCRIPTION	PART NUMBER	QUANTITY
1 .	Flap / Aileron End Rib	KPFL0100	2
2 .	Aileron Rib #1	KPAL0074	2
3 .	Aileron Rib #2	KPAL0075	2
4 .	Aileron Rib #3	KPAL0076	2
5 .	Aileron Rib #4	KPAL0077	2
6 .	Aileron Rib #5	KPAL0078	2
7 .	Aileron End Rib	KPAL0079	2
8 .	Aileron / Flap Leading Edge Spar	KPAL0080	2
9 .	Aileron / Flap Trailing Edge Spar	KPAL0081	2
10 .	Aileron Horn Attach Angle -LH	KPAL0015-L	1
10 .	Aileron Horn Attach Angle -RH	KPAL0015-R	1
11 .	1/8" Aluminum Rivet - Cherry Q	AAPQ-41	60
12 .	1/8" Aluminum Rivet - Cherry Q	AAPQ-42	32
13 .	3/16" Nut Plate	K-1000-3	6
14 .	3/32" Aluminum Pop Rivet	40APR1/8	12
15 .	Hinge Bracket	W-HB	6
16 .	3/16" Bolt	AN3-15	6
17 .	3/16" Thick Washer	AN960-10	12
18 .	3/16" Castle Nut	AN310-3	6
19 .	Small Cotter Pin	MS24665-134	6
20 .	3/16" Bolt	AN3-16A	8
21 .	3/16" Thin Washer	AN960-10L	6
22 .	3/16" Shear Acorn Nut	22NKM02	4
23 .	3/16" Bolt	AN3-10A	2
24 .	Aileron Clip	W-A-CLIP	2
25 .	Spacer Bushing, 1/4" x 0.28 x 1/2"	KAAC0004-4	0

*Builder must fabricate from raw stock.

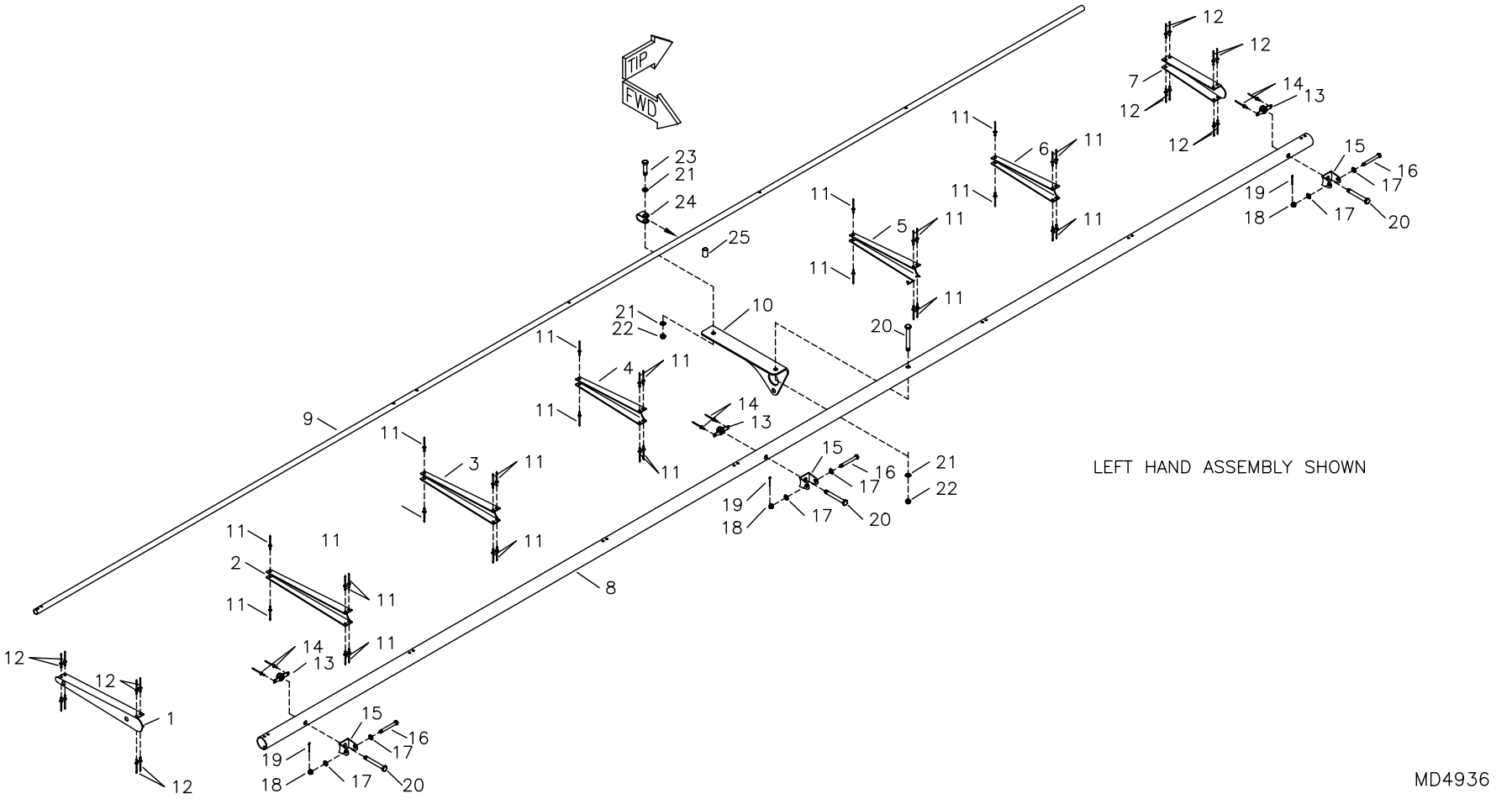

RANS S-6S COYOTE II
SPORT WING: FLAP FRAME ASSEMBLY

S-6S COYOTE II - SPORT WING: FLAP FRAME ASSEMBLY

#	DESCRIPTION	PART NUMBER	QUANTITY
1 .	Flap End Rib	KPFL0106	2
2 .	Flap Rib #1	KPFL0101	2
3 .	Flap Rib #2	KPFL0102	2
4 .	Flap Rib #3	KPFL0103	2
5 .	Flap Rib #4	KPFL0104	2
6 .	Flap Rib #5	KPFL0105	2
7 .	Flap / Aileron End Rib	KPFL0100	2
8 .	Aileron / Flap Leading Edge Spar	KPAL0080	2
9 .	Aileron / Flap Trailing Edge Spar	KPAL0081	2
10 .	Flap Horn Attach Angle - LH	KPFL0120-L	1
10 .	Flap Horn Attach Angle - RH	KPFL0120-R	1
11 .	1/8" Aluminum Rivet - Cherry Q	AAPQ-41	60
12 .	1/8" Aluminum Rivet - Cherry Q	AAPQ-42	32
13 .	3/16" Nut Plate	K-1000-3	6
14 .	3/32" Aluminum Pop Rivet	40APR1/8	12
15 .	Stainless Steel Hinge	W-HB	6
16 .	3/16" Bolt	AN3-15	6
17 .	3/16" Thick Washer	AN960-10	12
18 .	3/16" Castle Nut	AN310-3	6
19 .	Small Cotter Pin	MS24665-134	6
20 .	3/16" Bolt	AN3-16A	8
21 .	3/16" Thin Washer	AN960-10L	6
22 .	3/16" Shear Acorn Nut	22NKM02	4
23 .	3/16" Bolt	AN3-10A	2
24 .	Aileron Clip	W-A-CLIP	2
25 .	Spacer Bushing, 1/4" X .028 X 1/2" *	KAAC0004-4	0

*Builder must fabricate from raw stock.

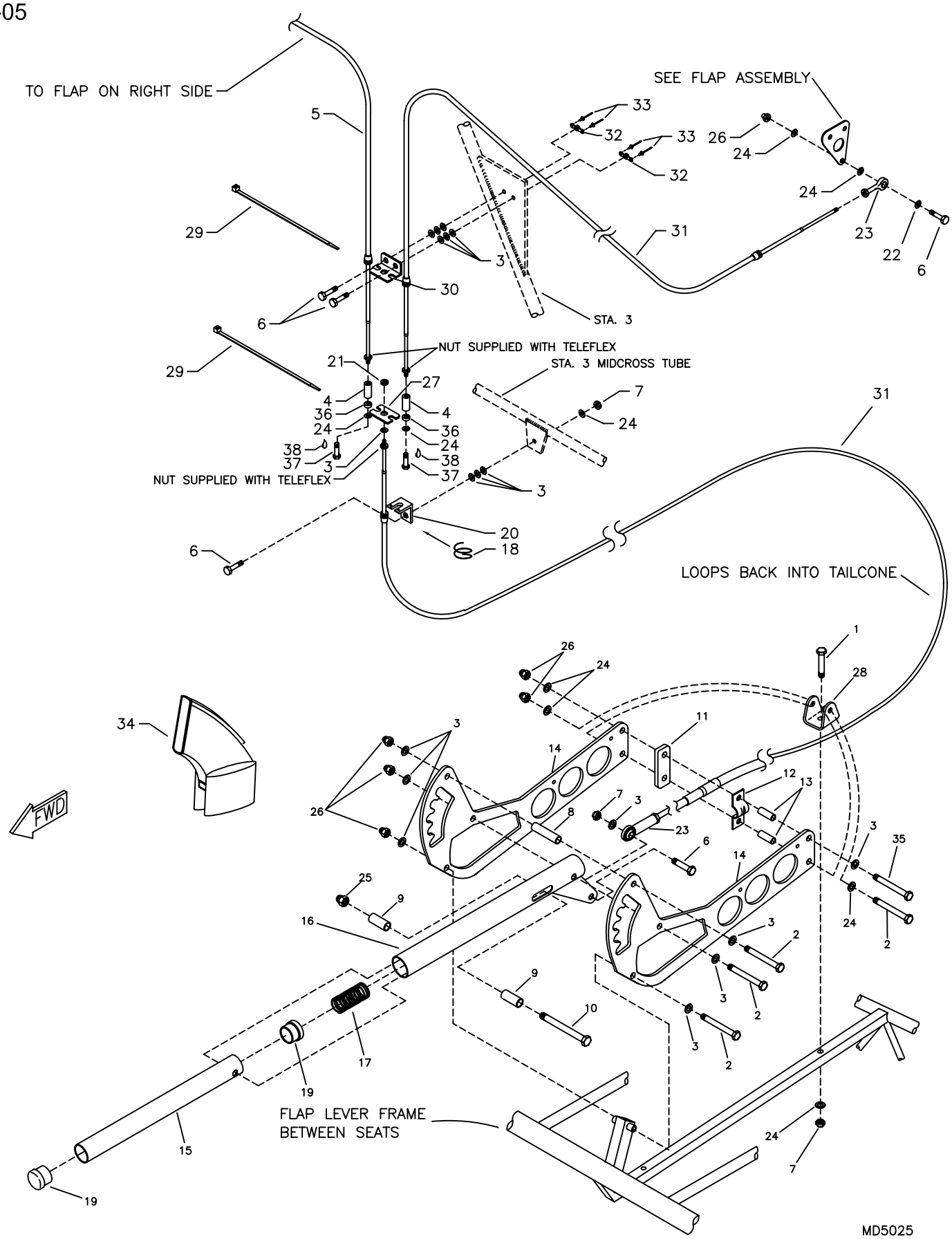

RANS S-6S COYOTE II
SPORT WING: FLAP LEVER ASSEMBLY

08/22/2007

S-6S COYOTE II - SPORT WING: FLAP LEVER ASSEMBLY

#	DESCRIPTION	PART NUMBER	QUANTITY
1 .	3/16" Bolt	AN3-7A	1
2 .	3/16" Bolt	AN3-14A	4
3 .	3/16" Thick Washer	AN960-10	18
4 .	Insert Nut	KPAC0012	2
5 .	Flap Teleflex - 10', RH	W-F-TELFX-10	1
6 .	3/16" Bolt	AN3-6A	6
7 .	3/16" Shear Nut	AN364-1032A	3
8 .	Aluminum Bushing, 1/4" x .028 x 7/8" *	KAAC0004-4	0
9 .	Aluminum Bushing, 3/8" x .058 x 3/8" *	KAAC0004-6	0
10 .	1/4" Bolt	AN4-20A	1
11 .	Plastic Shim	KPAC0121	1
12 .	Teleflex Retainer Bracket	KSCS0001	1
13 .	Aluminum Bushing, 1/4" x .028 x 9/16" *	KAAC0004-4	0
14 .	Flap Lever Side Plate	KPFL0124	2
15 .	Flap Trip Release Tube	KPFL0045	1
16 .	Flap Lever	KPFL0044	1
17 .	Spring	C-21	1
18 .	Safety Wire	SAFETY WIRE	0
19 .	3/4" Endcap	3/4 ENDCAP	2
20 .	Teleflex Retainer	W-TEL-R	1
21 .	3/16" Tensile Nut	AN365-1032A	1
22 .	#10 SS Washer	BSHW0022	2
23 .	Female Rod End	NF-3	3
24 .	3/16" Thin Washer	AN960-10L	11
25 .	1/4" Shear Acorn Nut	52NKTE-048	1
26 .	3/16" Shear Acorn Nut	22NKM02	7
27 .	Flap Dual Teleflex Retainer AFT	FL-DTR-AFT	1
28 .	Horizontal Stabilizer Attach Bracket	S2-SAB	1
29 .	Zip Ties	ZIP TIES	2
30 .	Flap Dual Teleflex Retainer Forward, S-12 Style	FL-DTR-FWD	1
31 .	Flap Teleflex - 8', LH	W-F-TELFX-8	2
32 .	3/16" Nut Plate	K-1000-3	2
33 .	3/32" Aluminum Pop Rivet	40APR1/8	4
34 .	Flap Lever Cover	KAFL0004	1
35 .	3/16" Bolt	AN3-13A	1
36 .	Aluminum Bushing, 1/4" X .028 X 1/8*	KAAC0004-4	0
37 .	3/16" Bolt	AN3-3A	2
38 .	Loctite Blue	LOC-TITE	0

*Builder must fabricate from raw stock.

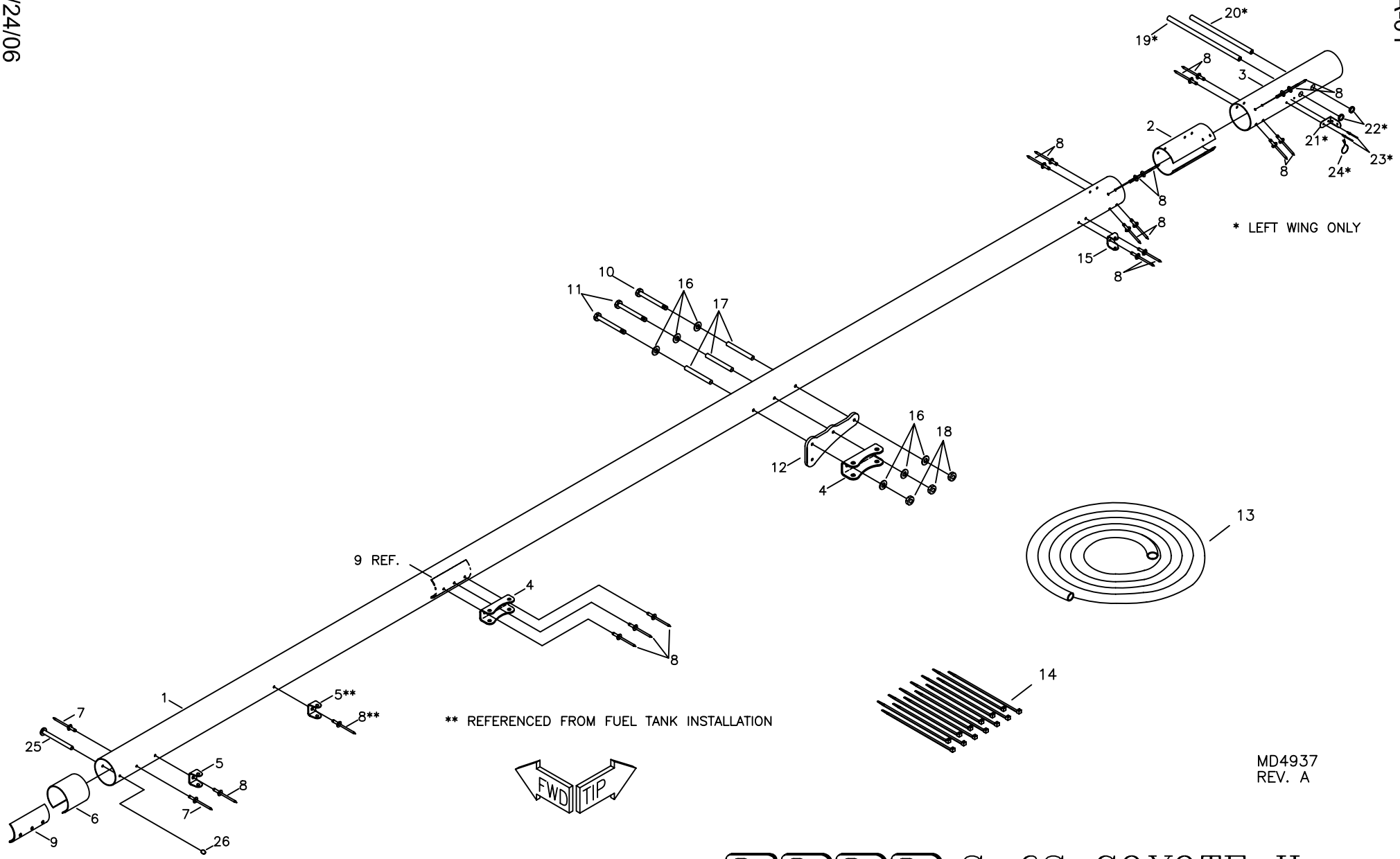

RANS S-6S COYOTE II SPORT WING: LEADING EDGE SPAR ASSEMBLY

S-6S COYOTE II - SPORT WING: LEADING EDGE SPAR ASSEMBLY

#	DESCRIPTION	PART NUMBER	QUANTITY
1.	Leading Edge Spar	KPWI0415	2
2.	Leading Edge Spar - Doubler	KPWI0419	2
3.	Leading Edge Spar - Tip	KPWI0417	2
4.	Long Wing Channel	W-WCL	4
5.	Horizontal Attach Bracket	S2-SAB	2
6.	Leading Edge Spar - Root Doubler	KPWI0355	2
7.	3/16" Stainless Steel Rivet	CCPQ-62	4
8.	3/16" Stainless Steel Rivet	CCPQ-64	36
9.	Leading Edge Spar Doubler	KPWI0264	2
10.	1/4" Bolt	AN4-35A	2
11.	1/4" Bolt	AN4-36A	4
12.	FWD Strut Plate	W-SAP-LE	2
13.	1/4" Fuel/Pitot/Static Line, Blue *	FS-FL	40 ft
14.	Nylon Ties *	N-TIES	13
15.	1" U-Bracket	KPAC0180	2
16.	1/4" Thin Washer	AN960-416L	12
17.	Aluminum Bushing, 3/8 x .058" x 3"	SB-3/8X3	6
18.	1/4" Shear Nut	AN364-428A	6
19.	Static Tube *	W-ST	1
20.	Pitot Tube *	W-ASI-P	1
21.	Attach Tang *	U-ST001	1
22.	Line Clamp, 3/8" *	FS-LCL 3/8	2
23.	1/8" Aluminum Pop Rivet - Cherry Q *	AAPQ-42	2
24.	Safety Wire *, **	SAFETY WIRE	0
25.	3/8" Clevis Pin	MS20392-5C101	2
26.	Loc Ring	RL 27 1/4	2

*Left wing only - Pitot/Static system.
**Builder provides.

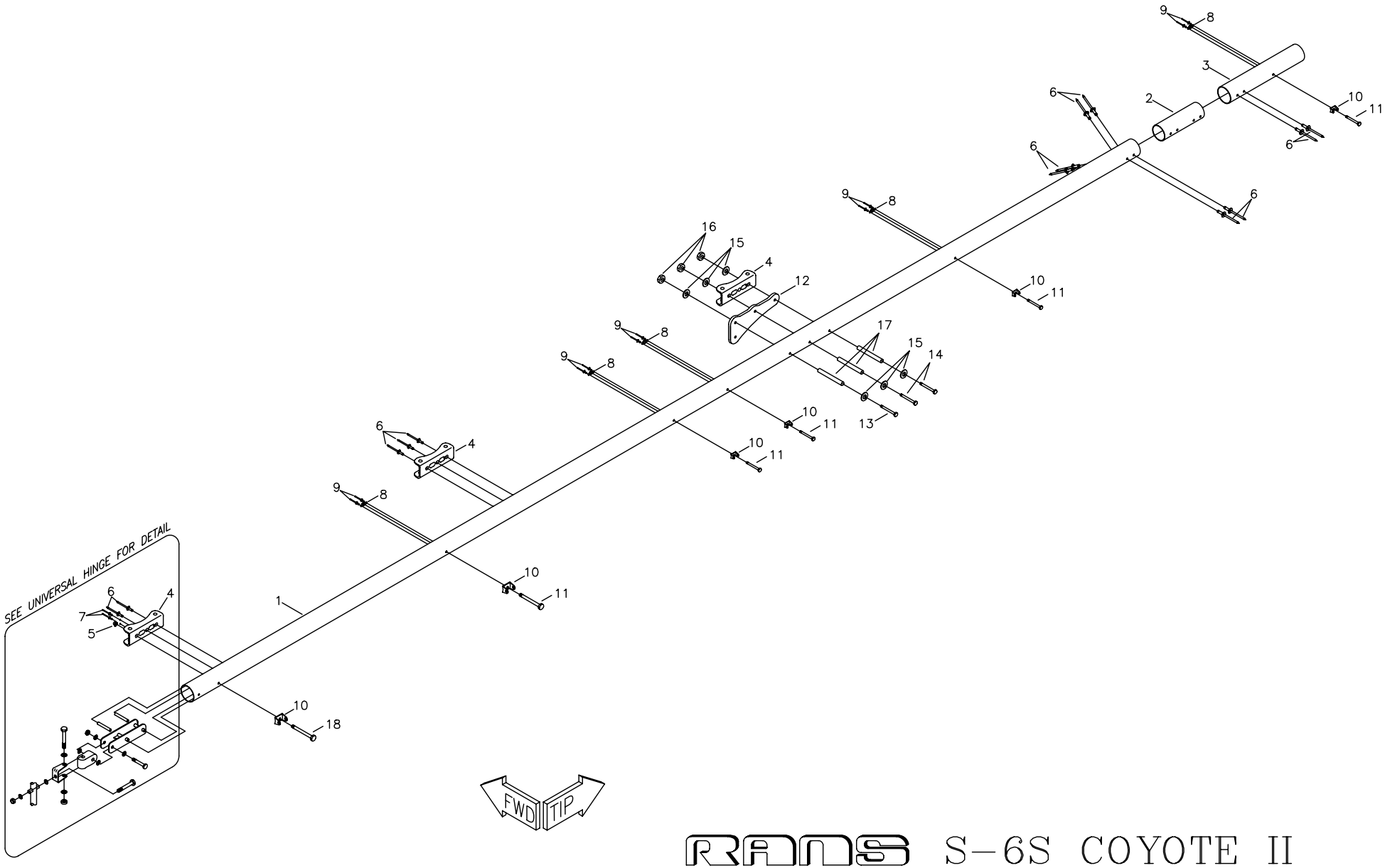

MD4938

RANS S-6S COYOTE II SPORT WING: TRAILING EDGE SPAR ASSEMBLY

S-6S COYOTE II - SPORT WING: TRAILING EDGE SPAR ASSEMBLY

#	DESCRIPTION	PART NUMBER	QUANTITY
1.	Trailing Edge Spar	KPWI0416	2
2.	Trailing Edge Spar - Doubler	KPWI0420	2
3.	Trailing Edge Spar - Tip	KPWI0418	2
4.	Long Wing Channel	W-WCL	6
5.	3/16" Side by Side Nut Plate	MS21086-L3	2
6.	3/16" Stainless Steel Rivet	CCPQ-64	34
7.	3/32" Aluminum Rivet	40APR1/4	4
8.	3/16" Nut Plate	K-1000-3	10
9.	3/32" Aluminum Rivet	40APR1/8	20
10.	Stainless Steel Hinge	W-HB	12
11.	3/16" Bolt	AN3-23A	10
12.	AFT Strut Plate	W-SAP-TE	2
13.	1/4" Bolt	AN4-25ALP	2
14.	1/4" Bolt	AN4-26ALP	4
15.	1/4" Thin Washer	AN960-416L	12
16.	1/4" Shear Nut	AN364-428A	6
17.	Aluminum Bushing 3/8" x .058 x 2"	SB-3/8X2	6
18.	3/16" Bolt	AN3-24A	2

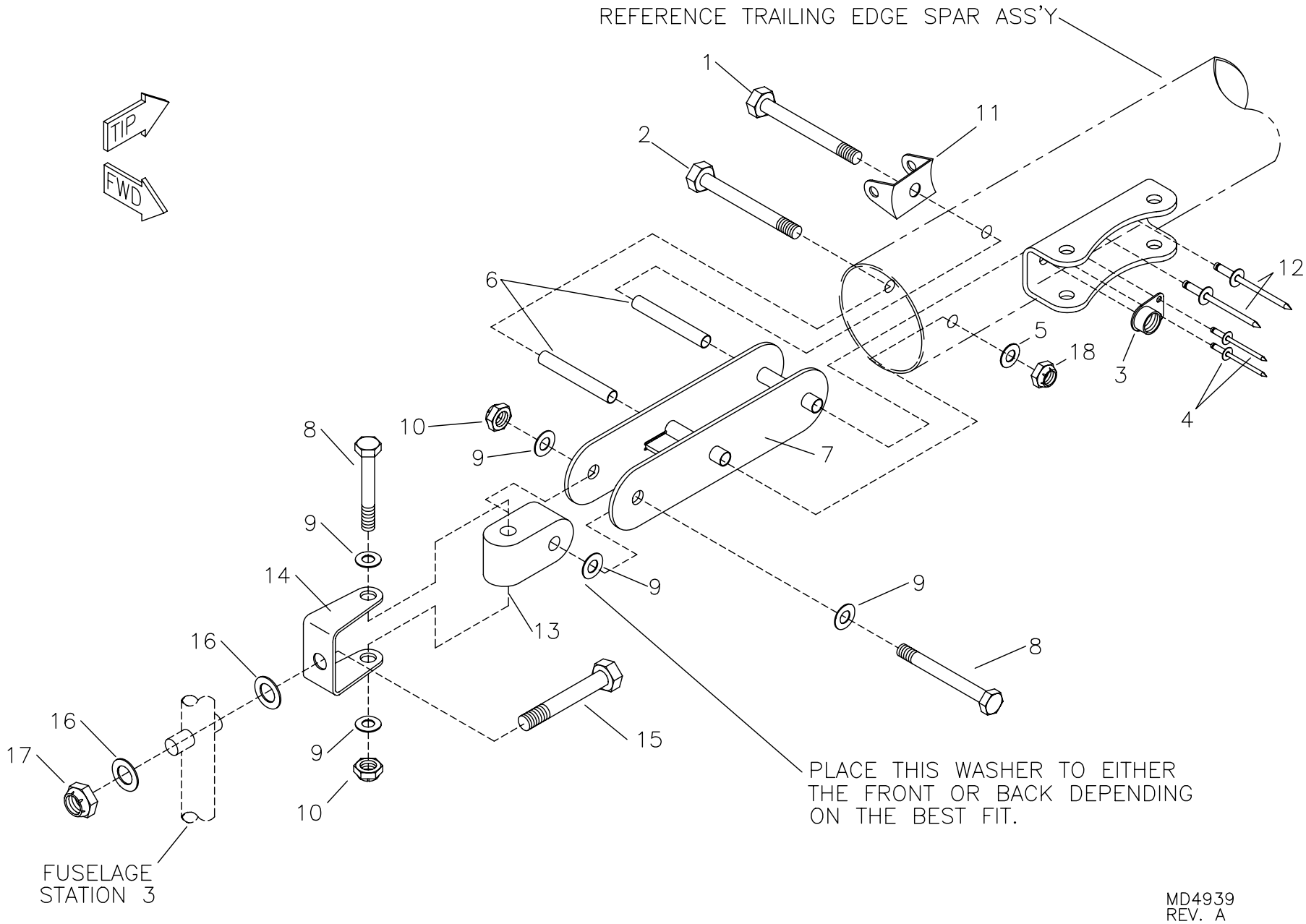

RANS S-6S COYOTE II
SPORT WING: UNIVERSAL HINGE

S-6S COYOTE II - SPORT WING: UNIVERSAL HINGE

#	DESCRIPTION	PART NUMBER	QUANTITY
1.	3/16" Bolt **	AN3-24A	0
2.	3/16" Bolt	AN3-23A	2
3.	Side-by-Side Nut Plate **	MS21086-L3	0
4.	3/32" Aluminum Pop Rivet **	40APR1/4	0
5.	3/16" Thick Washer	AN960-10	2
6.	Aluminum Bushing, 1/4" x .028 x 1 7/8" *	KAAC004-4	0
7.	Trailing Edge Spar Root Fitting	W-TES-RF	2
8.	1/4" Bolt	AN4-16A	4
9.	1/4" Thick Washer	AN960-416	12
10.	1/4" Shear Nut	AN364-428A	4
11.	Stainless Steel Hinge **	W-HB	0
12.	3/16" Stainless Steel Rivet **	CCPQ-64	0
13.	Hinge Cube	W-H-CUBE	2
14.	Stainless Steel U Bracket	SU-118	2
15.	5/16" Bolt	AN5-20A	2
16.	5/16" Thick Washer	AN960-516	4
17.	5/16" Tensile Nut	AN365-524A	2
18.	3/16" Shear Nut	AN364-1032A	2

*Builder must fabricate from raw stock.
**Referenced from Trailing Edge Spar.

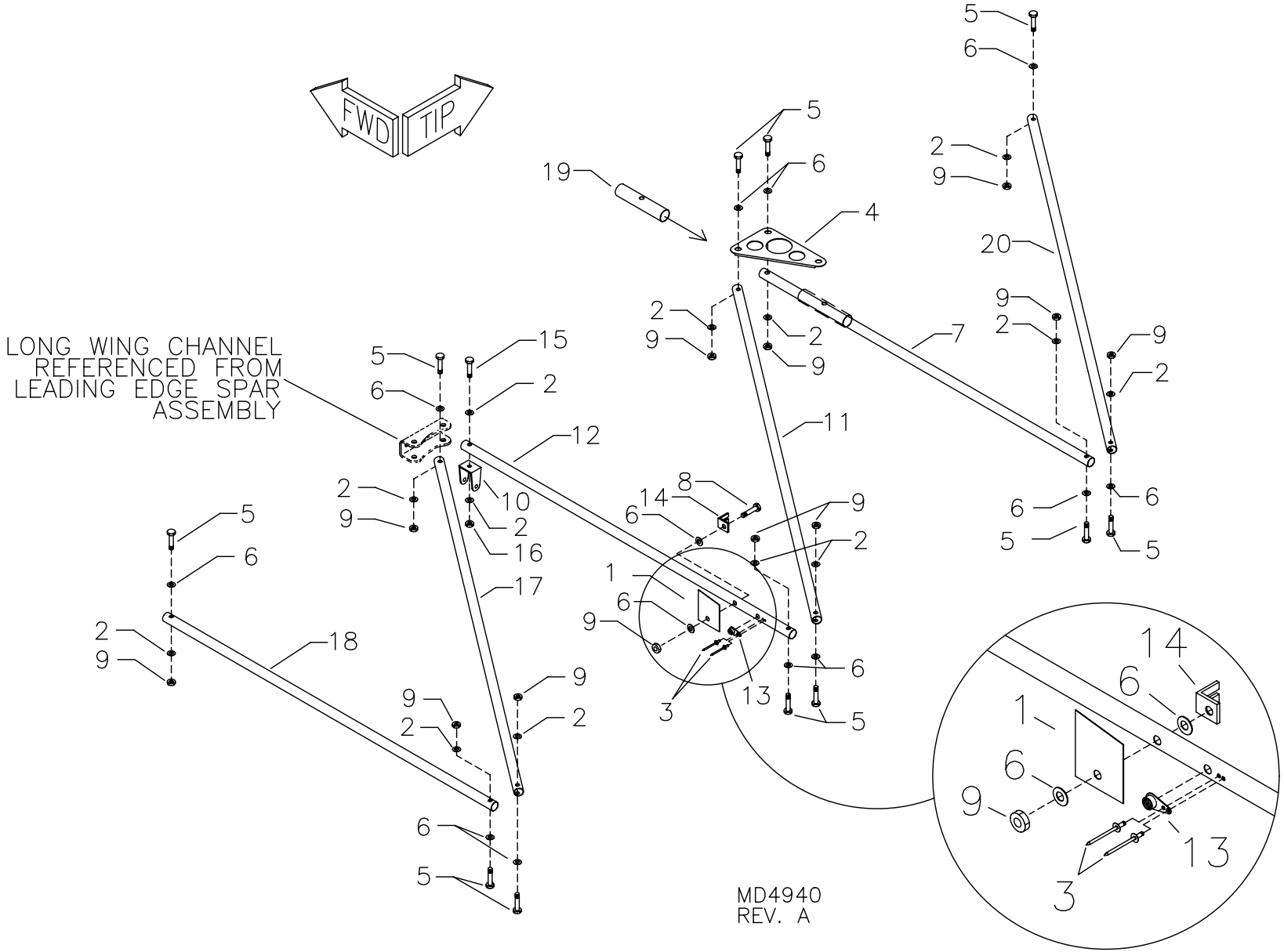

RANS S-6S COYOTE II

SPORT WING: INTERNAL BRACING TUBE ASSEMBLY

S-6S COYOTE II - SPORT WING: INTERNAL BRACING TUBE ASSEMBLY

#	DESCRIPTION	PART NUMBER	QUANTITY
1.	Rib Gusset **	KPWI0467	0
2.	3/16" Thick Washer	AN960-10	26
3.	3/32" Aluminum Pop Rivet	40APR1/8	4
4.	Bell Crank Gusset, LH *	CS-BELGU-LH	0
4.	Bell Crank Gusset, RH *	CS-BELGU-RH	0
5.	3/16" Bolt	AN3-15A	22
6.	3/16" Thin Washer	AN960-10L	26
7.	Outer Compression Tube	KPWI0413	2
8.	3/16" Bolt	AN3-14A	2
9.	3/16" Shear Nut	AN364-1032A	24
10.	Jury Strut Bracket	JS-BK	2
11.	Middle Drag Brace	KPWI0412	2
12.	Flap Compression Tube	KPWI0411	2
13.	3/16" Single Ear Nut Plate	MS21051-L3	2
14.	Teleflex Retainer	W-TEL-R	2
15.	3/16" Bolt	AN3-16A	2
16.	3/16" Tensile Nut	AN365-1032A	2
17.	Root Drag Brace	KPWI0410	2
18.	Root Compression Tube	KPWI0408	2
19.	Compression Tube Doubler *	CS-CTD	0
20.	Outer Drag Brace	KPWI0414	2

*Referenced from Aileron Push Pull System.
**Referenced from Rib Assembly.

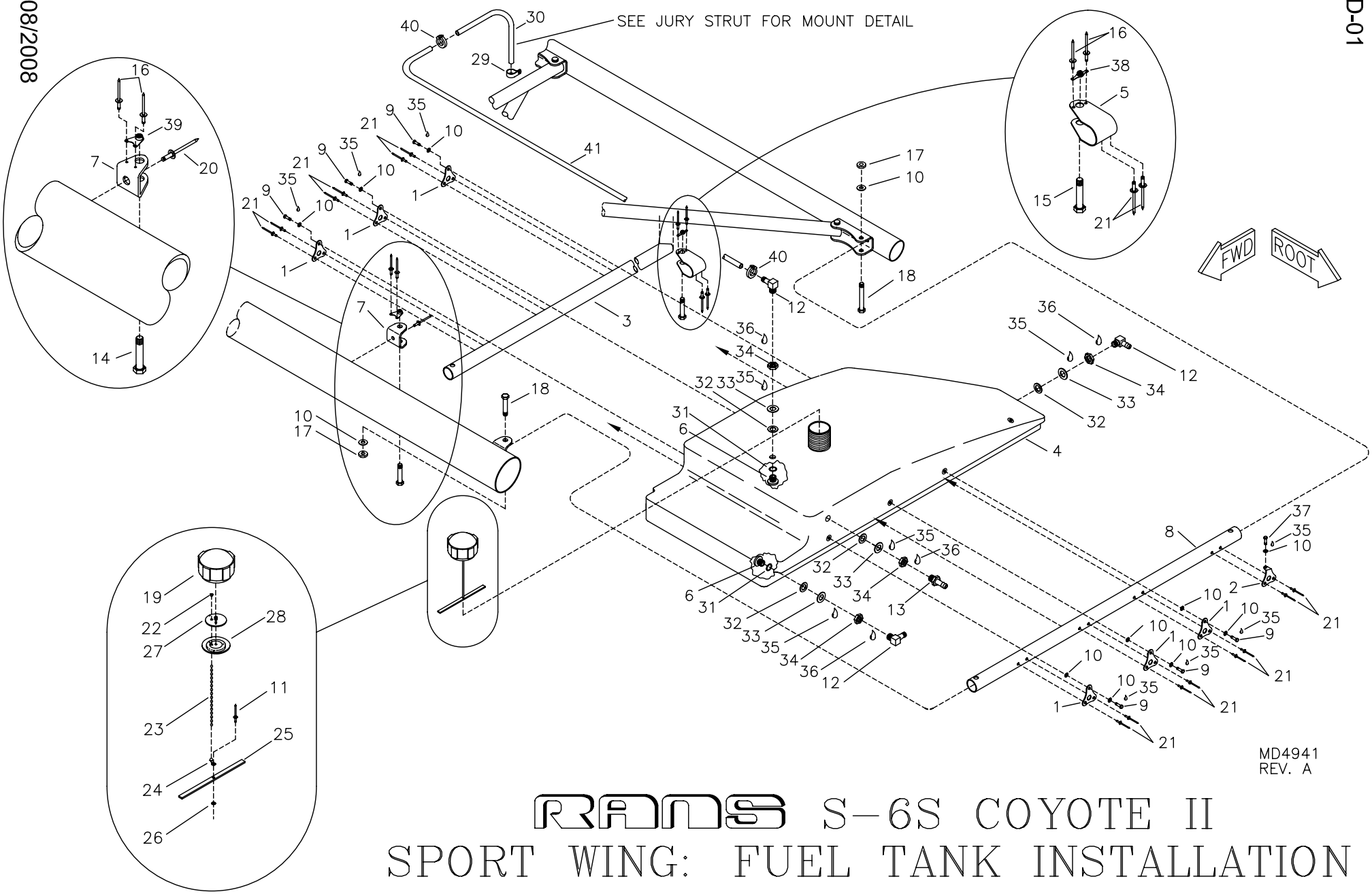

RANS S-6S COYOTE II
SPORT WING: FUEL TANK INSTALLATION

S-6S COYOTE II - SPORT WING: FUEL TANK INSTALLATION

#	DESCRIPTION	PART NUMBER	QUANTITY
1 .	Wing Tank - Mount Bracket	KPFS0007	12
2 .	Wing Tank - AFT Mount Bracket, LH	KPFS0011-L	1
2 .	Wing Tank - AFT Mount Bracket, RH	KPFS0011-R	1
3 .	Outer Tank Support	KPWI0409	2
4 .	Fuel Tank, LH	KPFS0005-L	1
4 .	Fuel Tank, RH	KPFS0005-R	1
5 .	U Bracket	KPAC0055	2
6 .	Tank Withdrawal Fitting	KPFS0017	8
7 .	Attach Bracket	S2-SAB	2
8 .	Root Compression Tube *	KPWI0408	0
9 .	3/16" Bolt	AN3-4A	12
10 .	3/16" Thick Washer	AN960-10	20
11 .	1/8" Stainless Steel Pop Rivet - Cherry Q	CCPQ-44	24
12 .	90 Withdrawal Fitting	8342	6
13 .	Straight Withdrawal Fitting	8330	2
14 .	3/16" Bolt	AN3-15A	2
15 .	3/16" Bolt	AN3-14A	2
16 .	3/32" Aluminum Pop Rivet	40APR1/8	8
17 .	3/16" Shear Nut *	AN364-1032A	0
18 .	3/16" Bolt *	AN3-15A	0
19 .	Fuel Cap	KSFS0007	2
20 .	3/16" Stainless Steel Pop Rivet - Cherry Q	CCPQ-64	2
21 .	1/8" Stainless Steel Pop Rivet - Cherry Q	CCPQ-42	32
22 .	Bead Chain - Retainer Sleeve	KSHW0014	2
23 .	#3 Bead Chain	KSHW0012	14 in
24 .	Bead Chain - End Coupling	KSHW0013	2
25 .	Plastic Retainer	KPFS0012	2
26 .	1/8" Small Brass Washer	AN960-B4	2
27 .	Plastic Baffle ***	KSFS0012	0
28 .	Rubber Gasket ***	KSFS0013	0
29 .	Plain Clamp	AN742-D4	2
30 .	Vent Tube	KPFS0064	2
31 .	O-Ring	KSFS0009	8
32 .	Rubber Washer	KSFS0010	8
33 .	1/2" Thick Washer	AN960-816	8
34 .	Nut-Flared Tube Bulkhead	AN924-5D	8
35 .	Loctite Blue	LOC-TITE	0
36 .	Thread Sealant **	KSAC0014	0
37 .	3/16" Bolt	AN3-3A	2
38 .	3/16" Nut Plate	K-1000-3	2
39 .	3/16" Corner Nut Plate	MS21073-L3	2
40 .	Line Clamp, 1/2" I.D.	FS-LCL 1/2	4
41 .	1/4" Black Fuel Line	KSFS0002	8 ft

*Referenced from wing frame assembly.
**Thread Sealant (builder provides) is recommneded but Loctite Blue can also be used.
***Supplied with Fuel Cap.

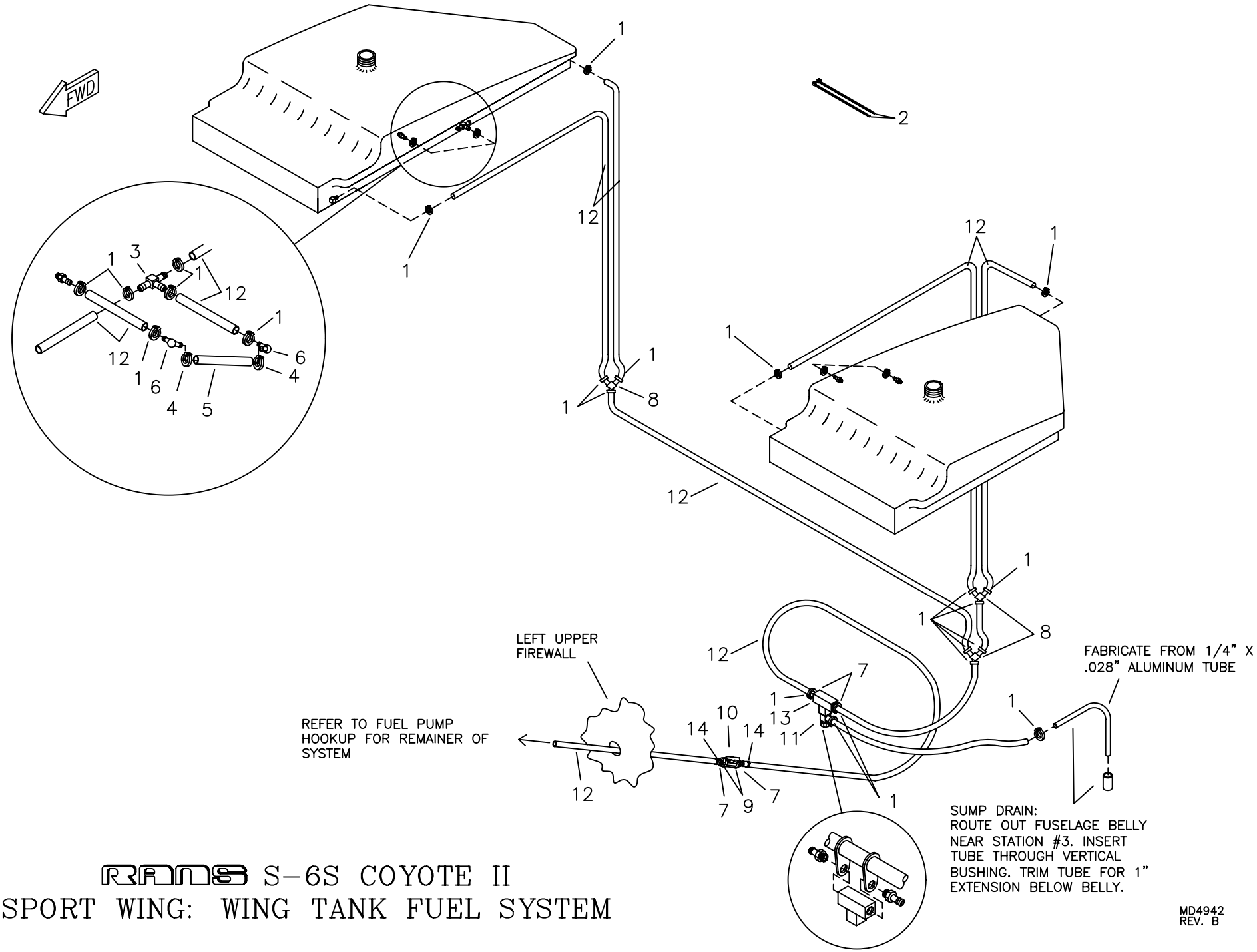

RANS S-6S COYOTE II
SPORT WING: WING TANK FUEL SYSTEM

S-6S COYOTE II - SPORT WING: FUEL SYSTEM

#	DESCRIPTION	PART NUMBER	QUANTITY
1 .	Line Clamp, 1/2" I.D.	FS-LCL 1/2	29
2 .	Long Nylon Ties	LG-N-TIE	2
3 .	1/4" Tee	8338	2
4 .	Line Clamp, 5/16" I.D.	FS-LCL 5/16	4
5 .	1/4" Clear Fuel Line	KSFS0008	3 ft
6 .	1/4" x 1/4" 90 Fitting	7-11044	4
7 .	Straight Withdrawal Fitting	8330	4
8 .	Fuel Line "Y" Connector	8345	3
9 .	Hose Clamp, 1 1/2"	5-5216	2
10 .	Fuel Shut Off Valve	FS-S-OFF	1
11 .	Sump Drain Valve	8336	1
12 .	1/4" Black Fuel Line	KSFS0002	50 ft
13 .	1/8" Brass Tee Fitting	3-20120	1
14 .	Small Hose Clamp	5-6202	2

FUEL SYSTEM GASCOLATOR FOR ALL MODELS OF RANS AIRCRAFT.

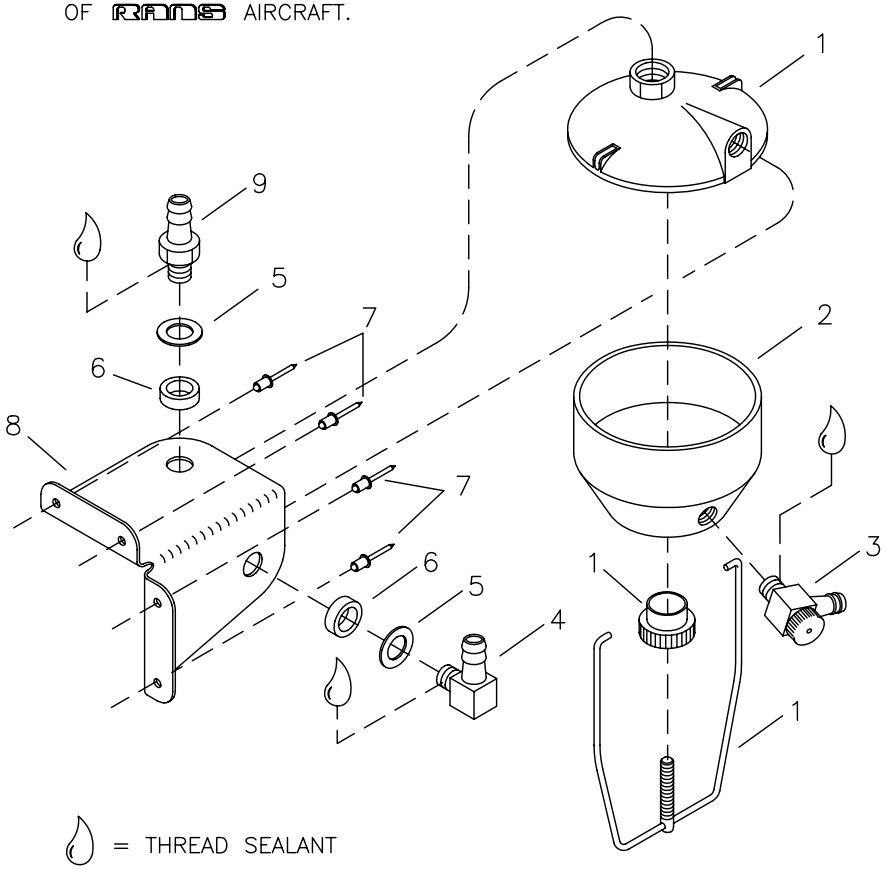

THIS SLICE OF RUBBER HOSE (6) GOES BETWEEN BRACKET AND WASHER TO FRICTION MOUNT GASCOLATION. TIGHTEN DOWN FITTINGS INTO THE GASCOLATOR TO EFFECT A SEAL AND THE MOUNT SHOULD BE SECURE.

TYPICAL GASCOLATOR INSTALLATION MOUNT VIA RIVETS AT LOW POINT ON FIREWALL. ALLOW ACCESS THROUGH COWLING FOR DRAINING PRIOR TO FLIGHT.

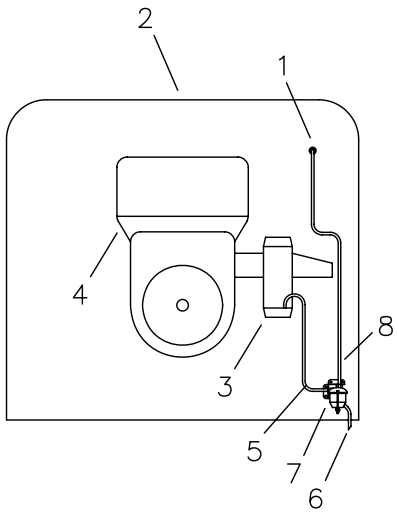

1. FIREWALL GROMMET
2. FIREWALL
3. CARBURETOR(S)
4. ENGINE
5. FUEL OUTLET FROM GASCOLATOR
6. FUEL DRAIN
7. GASCOLATOR
8. FUEL FEED FROM TANKS

MD1249

RANS S-6S COYOTE II
OPTIONAL GASCOLATOR

S-6S COYOTE II - SPORT WING: OPTIONAL GASCOLATOR

#	DESCRIPTION	PART NUMBER	QUANTITY
1.	Gascolator	GAS-LAT	1
2.	Gascolator Bowl	GAS-BOWL	1
3.	Sump Drain Valve	8336	1
4.	90 Withdrawal Fitting	8342	1
5.	3/8" Thick Washer	AN960-616	2
6.	Rubber Hose, 3/8" I.D. x 1/4" Long	GAS-RH-3/8X1/4	2
7.	1/8" Stainless Steel Pop Rivet - Cherry Q	CCPQ-42	4
8.	Gascolator Mount	GAS-MT	1
9.	Straight Withdrawal Fitting	8330	1

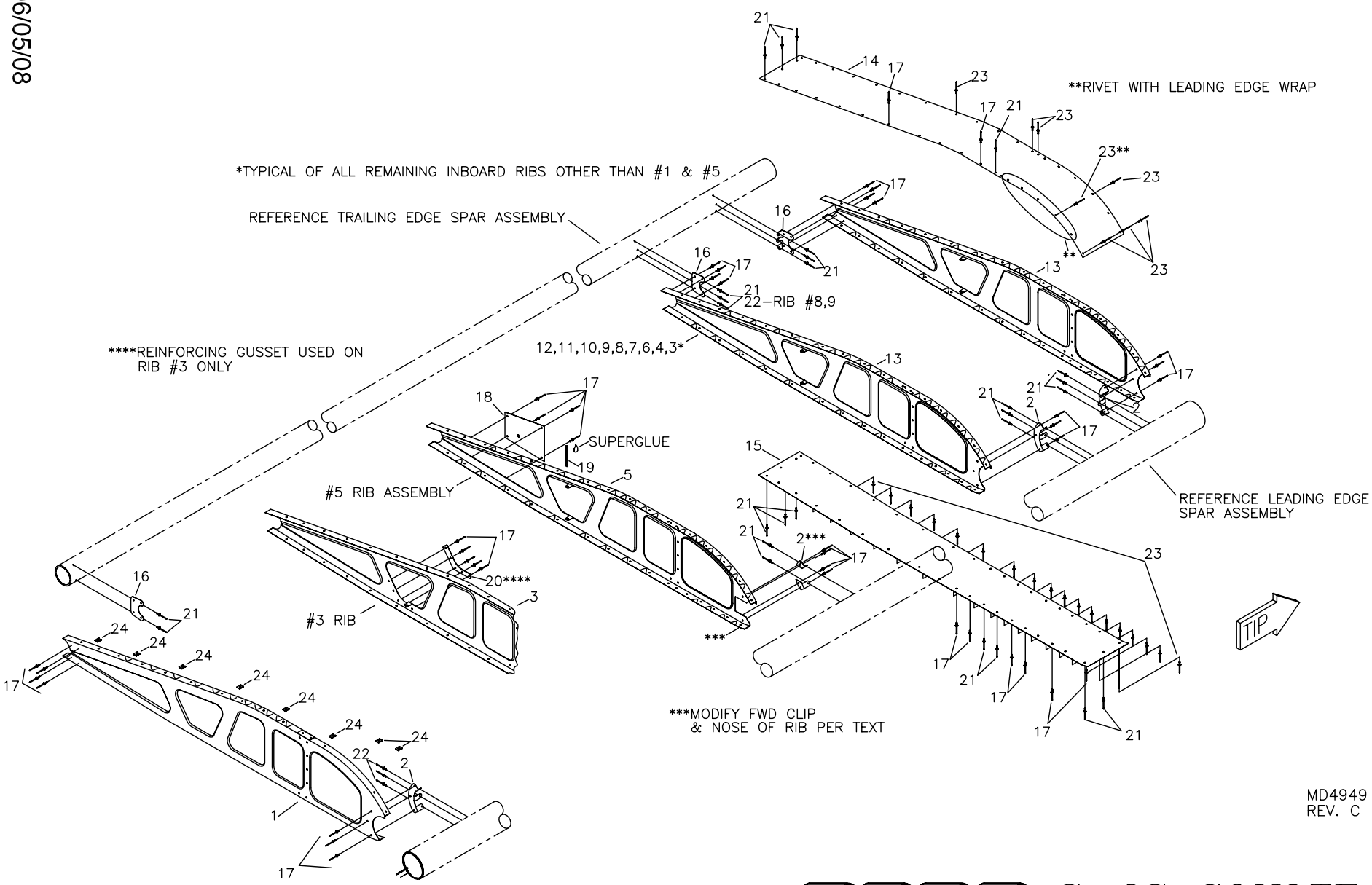

RANS S-6S COYOTE II
SPORT WING: RIB ASSEMBLY

S-6S COYOTE II - SPORT WING: RIB ASSEMBLY

#	DESCRIPTION	PART NUMBER	QUANTITY
1 .	Rib #1 - RH	KPWI0521-R	1
1 .	Rib #1 - LH	KPWI0521-L	1
2 .	Rib Attach Clip - FWD	KPWI0459	26
3 .	Rib #3 - LH	KPWI0522-L	1
3 .	Rib #3 - RH	KPWI0522-R	1
4 .	Rib #4 - RH	KPWI0523-R	1
4 .	Rib #4 - LH	KPWI0523-L	1
5 .	Rib #5 - LH	KPWI0524-L	1
5 .	Rib #5 - RH	KPWI0524-R	1
6 .	Rib #6 - LH	KPWI0525-L	1
6 .	Rib #6 - RH	KPWI0525-R	1
7 .	Rib #7 - RH	KPWI0526-R	1
7 .	Rib #7 - LH	KPWI0526-L	1
8 .	Rib #8 - RH	KPWI0527-R	1
8 .	Rib #8 - LH	KPWI0527-L	1
9 .	Rib #9 - RH	KPWI0528-R	1
9 .	Rib #9 - LH	KPWI0528-L	1
10 .	Rib #10 - RH	KPWI0529-R	1
10 .	Rib #10 - LH	KPWI0529-L	1
11 .	Rib #11 - LH	KPWI0530-L	1
11 .	Rib #11 - RH	KPWI0530-R	1
12 .	Rib #12 - LH	KPWI0531-L	1
12 .	Rib #12 - RH	KPWI0531-R	1
13 .	Rib #13 - LH	KPWI0532-L	2
13 .	Rib #13 - RH	KPWI0532-R	2
14 .	Tip Skin - Upper	KPWI0470	2
15 .	Tip Skin - Lower	KPWI0471	2
16 .	Rib Attach Clip - AFT	KPWI0460	24
17 .	1/8" Aluminum Pop Rivet - Cherry Q	AAPQ-41	330
18 .	Rib Gusset	KPWI0467	2
19 .	Serrated Grommet Strip	KSAC0023	2 in
20 .	Gusset, Rib #3	KPWI0494	2
21 .	1/8" Aluminum Pop Rivet - Cherry Q	AAPQ-42	186
22 .	1/8" Aluminum Pop Rivet - Cherry Q	AAPQ-44	18
23 .	1/8" Stainless Steel Rivet - Flush	CCC-42	90
24 .	Tinnerman	A1789-8Z-1	16

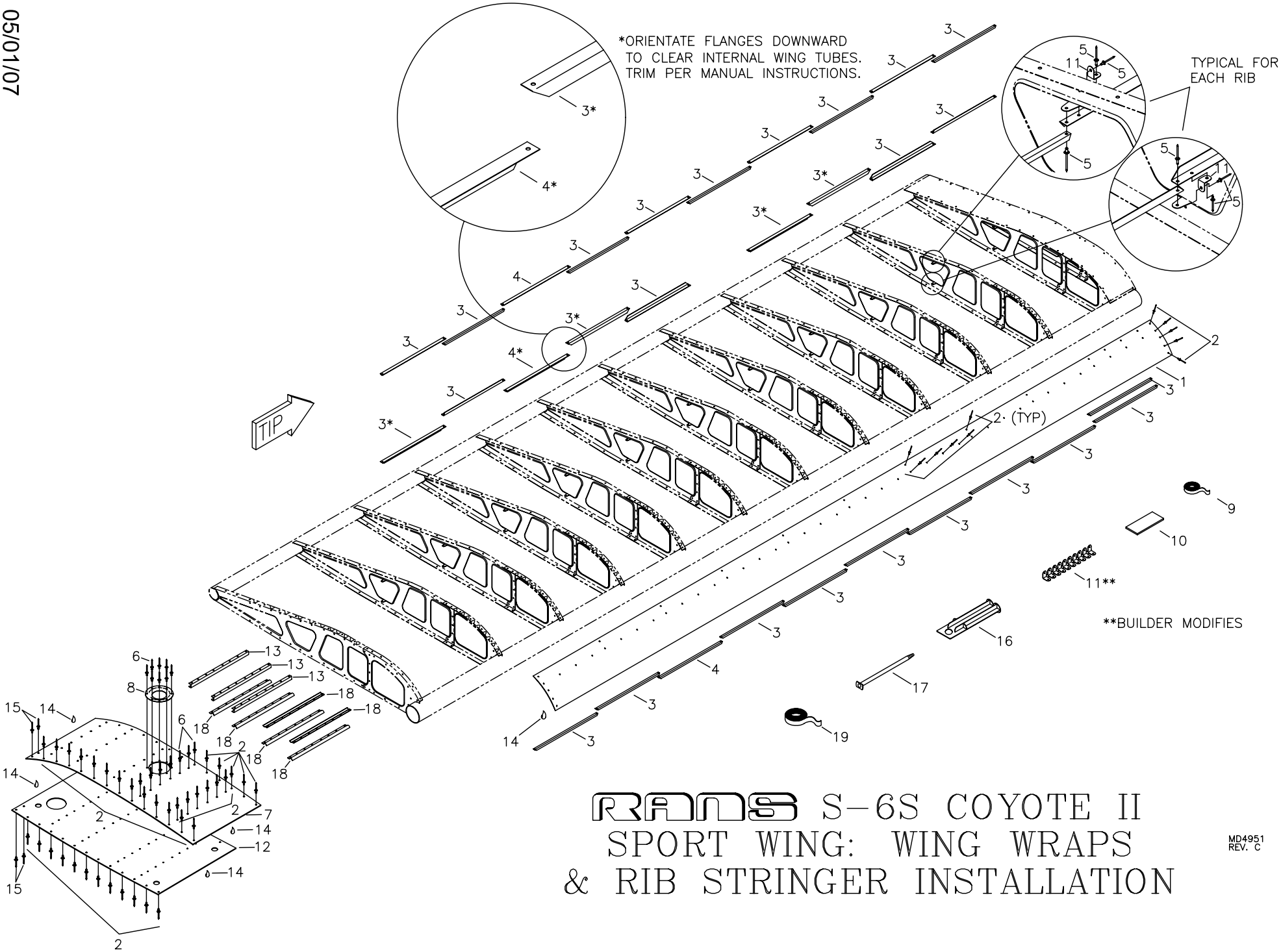

RANS S-6S COYOTE II
SPORT WING: WING WRAPS & RIB STRINGER INSTALLATION

MD4951
REV. C

S-6S COYOTE II - SPORT WING: WING WRAPS & RIB STRINGER INSTALL

#	DESCRIPTION	PART NUMBER	QUANTITY
1 .	Leading Edge Wrap	KPWI0466	2
2 .	1/8" Stainless Steel Rivet - Flush	CCC-42	220
3 .	Rib Stringer - Short	KPWI0490	54
4 .	Rib Stringer - Long	KPWI0491	6
5 .	1/8" Aluminum Pop Rivet - Cherry Q	AAPQ-41	120
6 .	1/8" Aluminum Pop Rivet - Avex	1691-0410	175
7 .	Root Skin, Upper	KPWI0501	2
8 .	Upper Root Skin Scupper - Wing	KPWI0206	2
9 .	2 Way Tape ***	2W-TAPE	0
10 .	1" Black Foam Tape	KSAC0011	2 in
11 .	Rib Stringer Attach Reinforcement Angle *	KPWI0500	4
12 .	Root Skin, Lower	KPWI0502	2
13 .	Root Skin Stiffener - Upper	KPWI0503	6
14 .	DP-460 Epoxy Adhesive**	DP-460	0
15 .	1/8" Stainless Steel Pop Rivet - Cherry Q	CCPQ-42	8
16 .	Plunger **	AD0627	0
17 .	Mixer Tube **	AD0293	0
18 .	Root Skin Stiffner - Lower	KPWI0509	12
19 .	Acrylic Foam Tape ****	-----	0

*Builder modifies.
**Builder supplied. DP-460 or J-B Weld recommended.
*** Refer to Wing Covering **** Builder Supplied

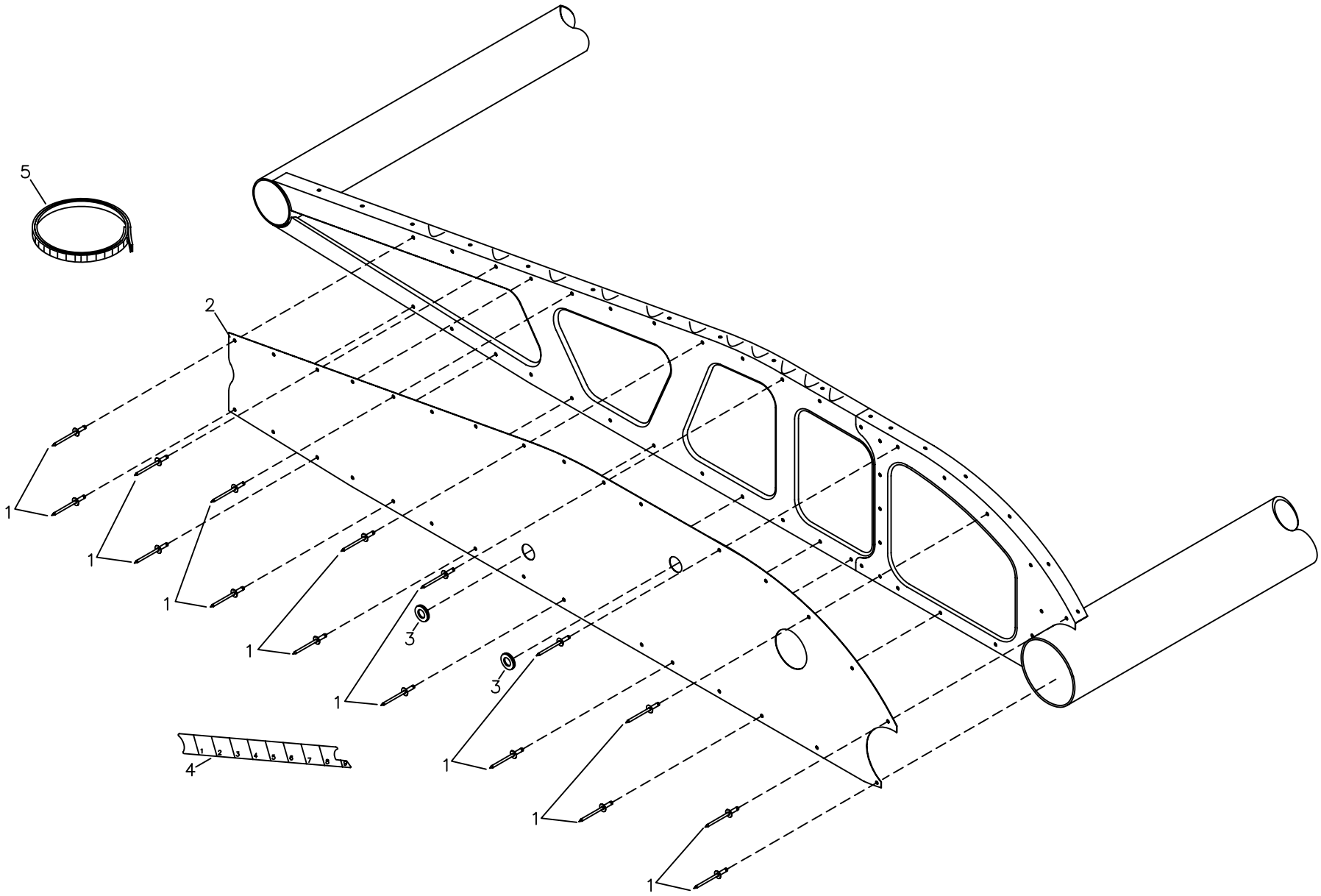

MD4933

RANS S-6S COYOTE II
SPORT WING: ROOT RIB CLOSEOUT INSTALLATION

S-6S COYOTE II - SPORT WING: ROOT RIB CLOSE OUT INSTALLATION

#	DESCRIPTION	PART NUMBER	QUANTITY
1 .	1/8" Aluminum Pop Rivet - Avex	1691-0410	66
2 .	Root Rib Closeout - Sport Wing	KPWI0504	2
3 .	Rubber Grommet	KSHW0085	4
4 .	Sight Gauge Decal - RH *	KPWI0261-R	0
4 .	Sight Gauge Decal - LH *	KPWI0261-L	0
5 .	Serrated Grommet Strip	kSAC0023	12 in

*Included on Experimental Decal Sheet.

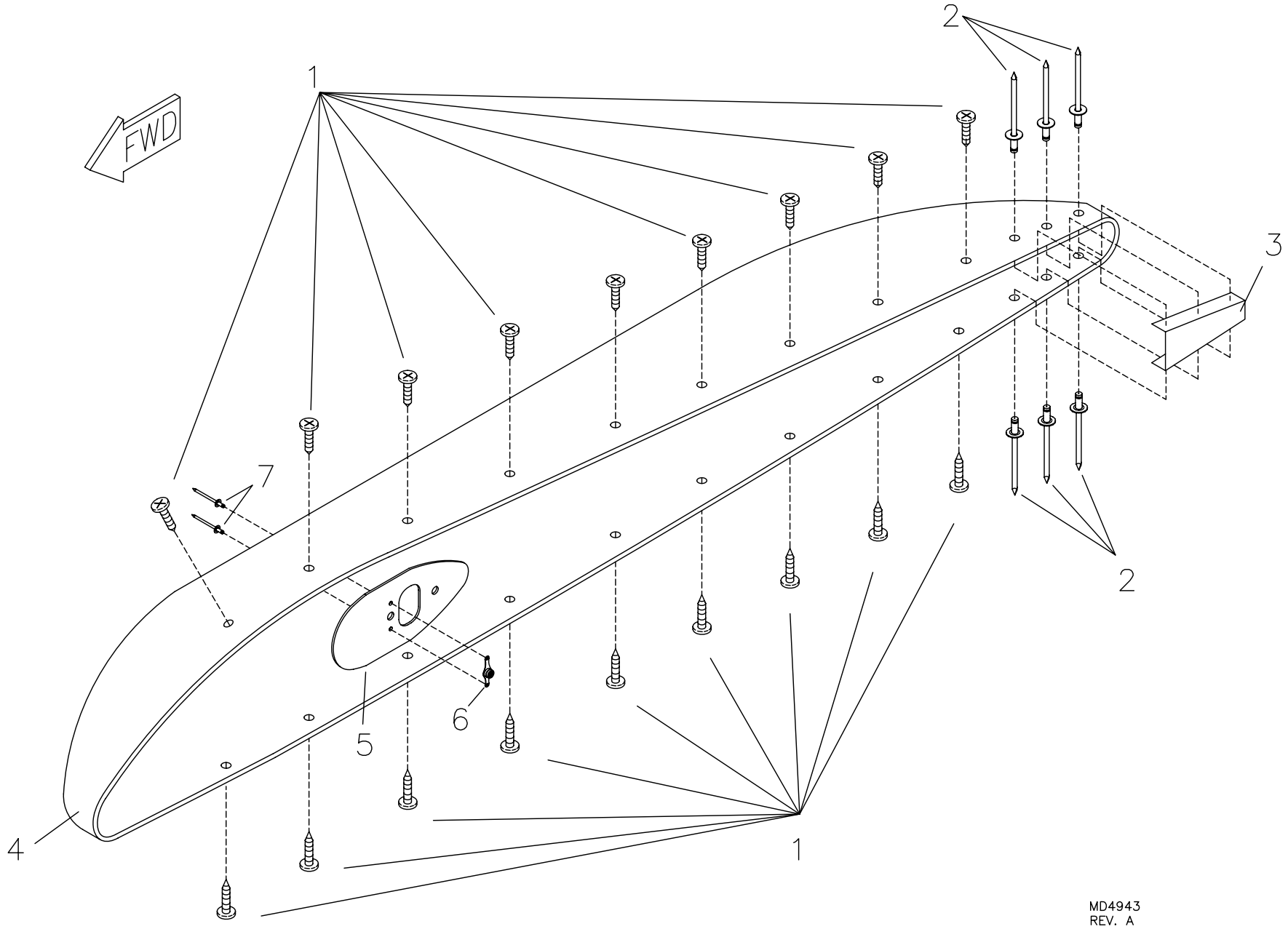

RANS S-6S COYOTE II
SPORT WING: WING TIP INSTALLATION

S-6S COYOTE II - SPORT WING: WING-TIP INSTALLATION

#	DESCRIPTION	PART NUMBER	QUANTITY
1 .	#6 Pan Head Screw	6RX1/2 PHS	40
2 .	1/8" Aluminum Pop Rivet - Avex	1691-0410	12
3 .	Wing Tip Closeout - Left	KPWI0479-L	1
3 .	Wing Tip Closeout - Right	KPWI0479-R	1
4 .	Wing Tip - Left	KPWI0478-L	1
4 .	Wing Tip - Right	KPWI0478-R	1
5 .	Strobe Light Mount - AVEO	KPWI0541	2
6 .	3/16" Nut Plate	K-1000-3	2
7 .	3/32" Aluminum Rivet	40APR1/8	4

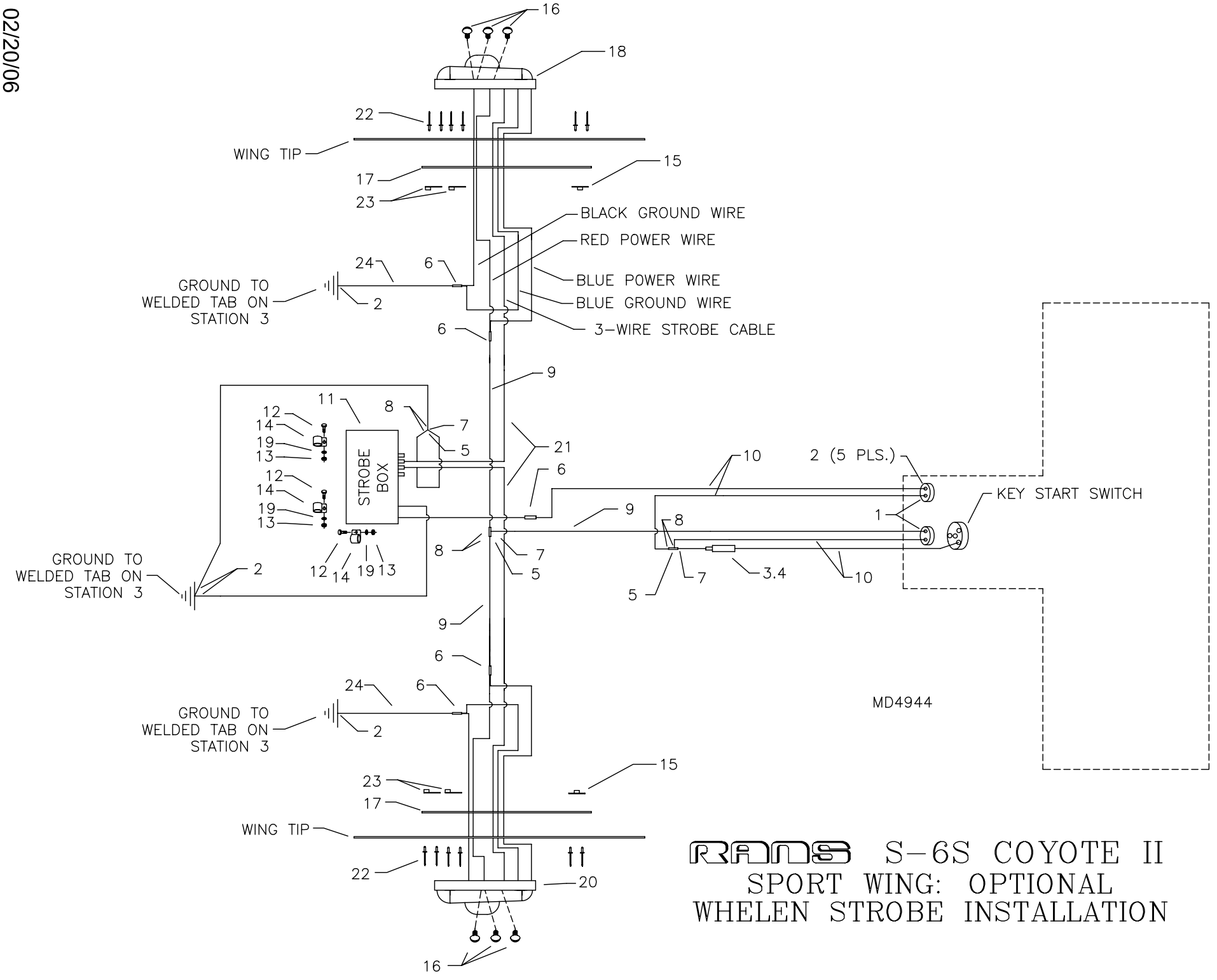

RANS S-6S COYOTE II
SPORT WING: OPTIONAL
WHELEN STROBE INSTALLATION

S-6S COYOTE II - SPORT WING: OPTIONAL WHELEN STROBES

#	DESCRIPTION	PART NUMBER	QUANTITY
1.	Ignition Switch	MS35058-22	2
2.	14 Gauge Eye Terminal, Blue 3/16"	IP-7102	9
3.	15 AMP Fuse	KSES0020-15	1
4.	14 Gauge, In Line Fuse Holder	KSES0019	1
5.	Terminal Y Connector, Brass	IP-YC	3
6.	14 Gauge Splice, Butt Connector	IP-7132	5
7.	14 Gauge Male Spade Terminal, Blue	IP-7126	3
8.	14 Gauge Female Spade Terminal, Blue	IP-7128	6
9.	14 Gauge Yellow Wire	14 GA WIRE/YELLOW	50 ft
10.	14 Gauge Red Wire	14 GA WIRE/RED	8 ft
11.	Whelen Strobe Light Power Supply	A413A, HDA-DF	1
12.	3/16" Bolt	AN3-4A	3
13.	3/16" Shear Nut	AN364-1032A	3
14.	1/2" Cushioned Clamp	MS21919-DG8	3
15.	8-32 Nut Plate	MS21047-08	2
16.	8/32" Truss Head Bolt	AN515-8R7	6
17.	Navigation Light Mount Plate	KPWI0472	2
18.	Whelen Right Strobe Light	A600-PG	1
19.	3/16" Thin Washer	AN960-10L	3
20.	Whelen Left Strobe Light	A600-PR	1
21.	Whelen Installation & Cable	HD-60	1
22.	3/32" Aluminum Pop Rivet	40APR1/4	12
23.	8-32 Single Ear Nut Plate	MS21051-08	4
24.	14 Gauge Black Wire	14 GA WIRE/BLACK	40 ft

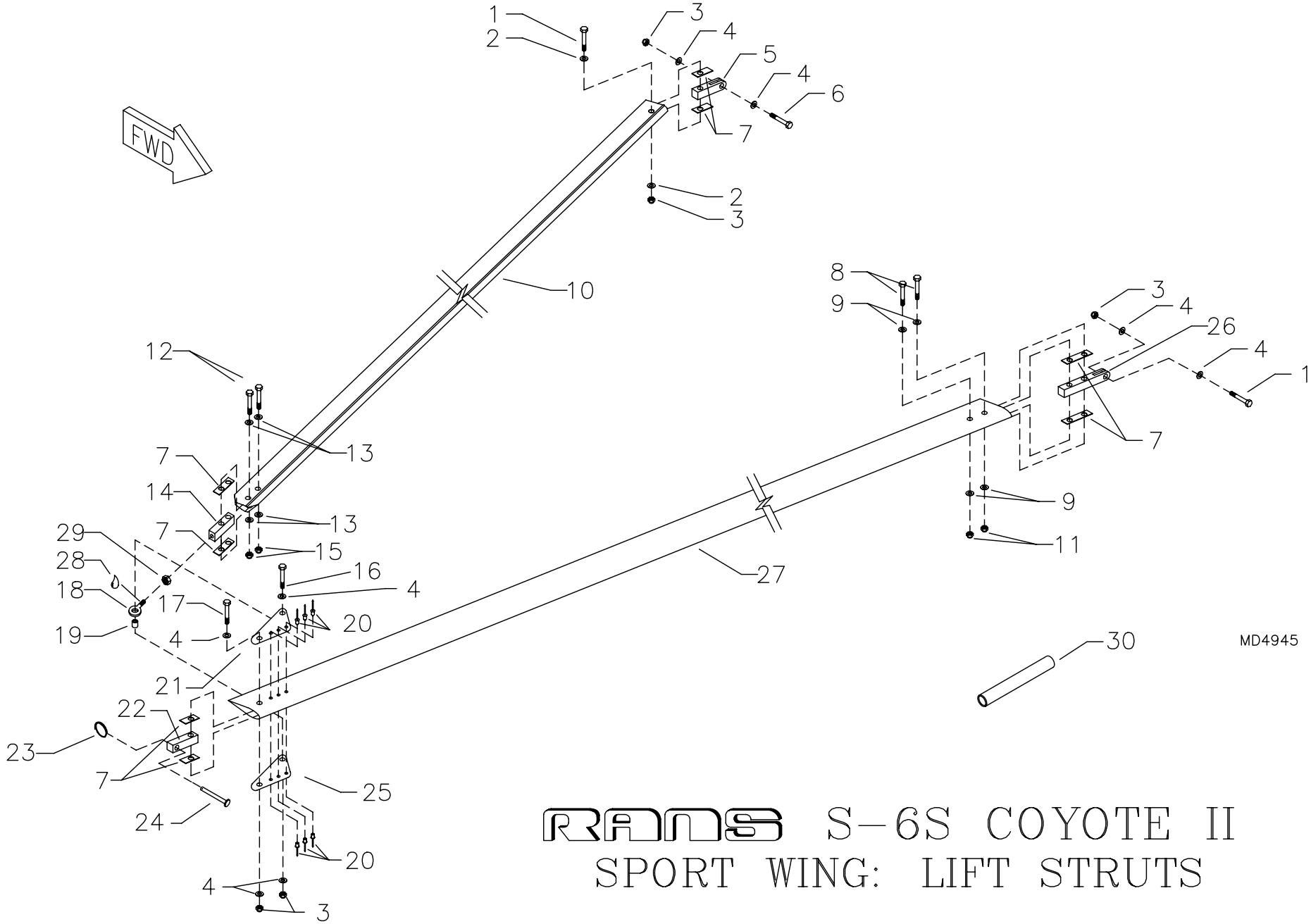

RANS S-6S COYOTE II
SPORT WING: LIFT STRUTS

S-6S COYOTE II - SPORT WING: LIFT STRUT KIT

#	DESCRIPTION	PART NUMBER	QUANTITY
1.	5/16" Bolt	AN5-13A	4
2.	5/16" Thin Washer	AN960-516L	4
3.	5/16" Shear Nut	AN364-524A	10
4.	5/16" Thick Washer	AN960-516	16
5.	AFT Upper Lift Strut Connector	LS-ACU-2	2
6.	5/16" Bolt	AN5-12A	2
7.	Universal Shim *	UNV-SHIM	4
8.	1/4" Bolt	AN4-15A	4
9.	1/4" Thin Washer	AN960-416L	8
10.	AFT Lift Strut	KPLS0044	2
11.	1/4" Shear Acorn Nut	52NKTE-048	4
12.	3/16" Bolt	AN3-13A	4
13.	3/16" Thick Washer	AN960-10	8
14.	Adjustor End	S-AE-3/4	2
15.	3/16" Shear Acorn Nut	22NKM02	4
16.	5/16" Bolt	AN5-11A	2
17.	5/16" Bolt	AN5-17A	2
18.	Rod End	3/8X24 ROD END	2
19.	Aluminum Bushing, 3/8" x .035 x 1/2" **	KAAC0020-1	0
20.	3/16" Stainless Steel Pop Rivet - Cherry Q	CCPQ-64	12
21.	Gusset Plate	116-S-GUSS-A	2
22.	Strut Connector, Aluminum	LS-SC-F-ALUM	2
23.	Loc Ring	RL 27 5/16	2
24.	5/16" Clevis Pin	MS20392-4C33	2
25.	Gusset Plate	116-S-GUSS-B	2
26.	FWD Upper Lift Strut Connector	LS-FCU	2
27.	FWD Lift Strut	KPLS0045	2
28.	Loctite	LOC-TITE	0
29.	3/8" Plain Nut	MS35650-3382	2
30.	Adjustable Lift Strut - Raw Stock Kit	KAAC0020	1

*Builder fabricates as required; refer to text.
**Builder must fabricate from raw stock.

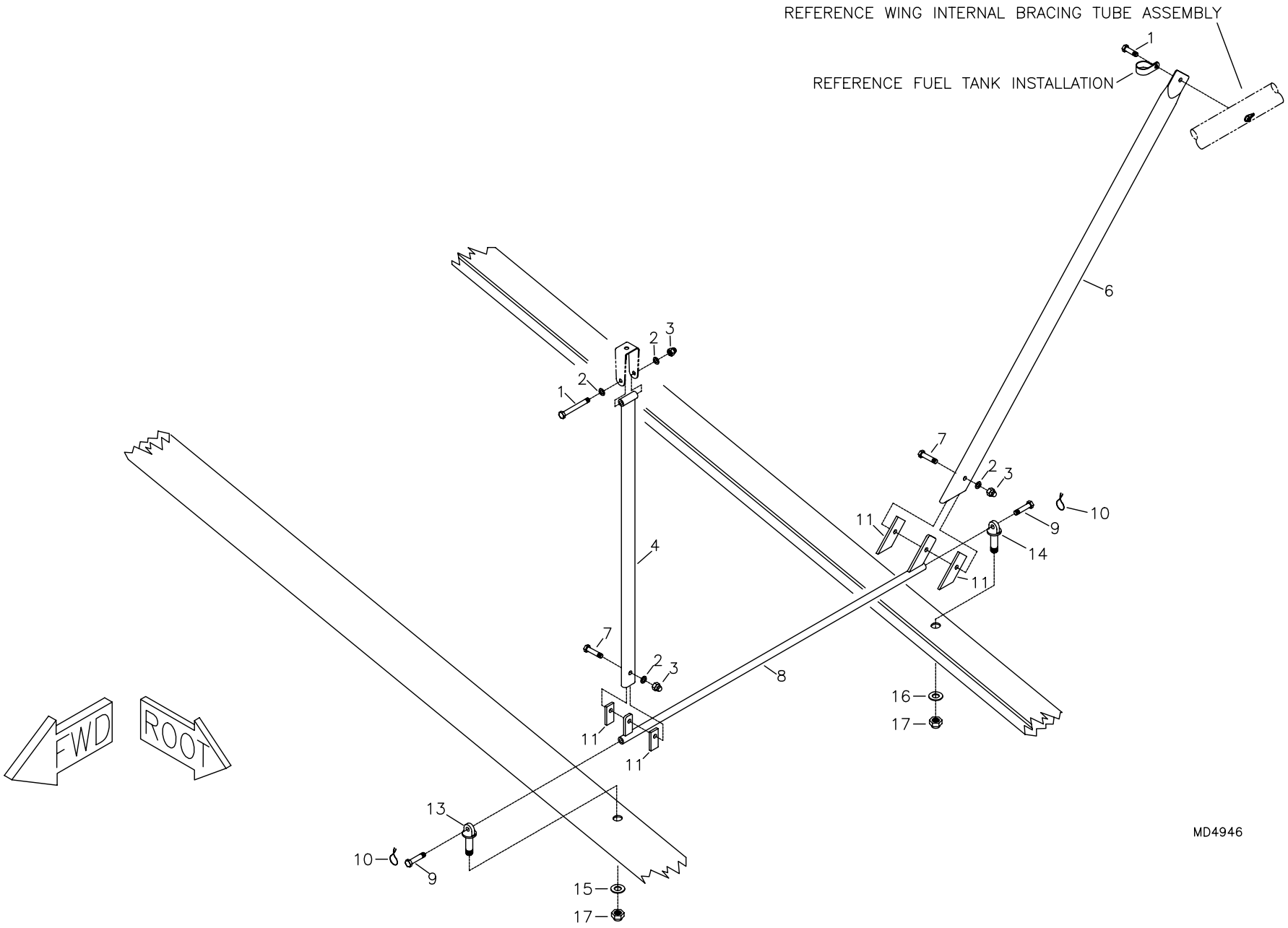

RANS S-6S COYOTE II
SPORT WING: JURY STRUTS

S-6S COYOTE II - SPORT WING: JURY STRUTS

#	DESCRIPTION	PART NUMBER	QUANTITY
1 .	3/16" Bolt	AN3-14A	4
2 .	3/16" Thick Washer	AN960-10	8
3 .	3/16" Shear Acorn Nut	22NKM02	6
4 .	FWD Jury Strut *	KPJS0010	2
5 .	3/16" Nut Plate	K-1000-3	2
6 .	AFT Jury Strut - Sport Wing *	KPJS0011	2
7 .	3/16" Bolt	AN3-6A	4
8 .	Jury Strut Connect Tube - Sport Wing	KPJS0016	2
9 .	3/16" Bolt	AN3H-4A	4
10 .	Safety Wire	-----	0
11 .	Plastic Shim *	KPAC0121	8
12 .	3/32" Aluminum Pop Rivet	40APR1/8	4
13 .	1/4" Eyebolt	AN43B-15A	2
14 .	1/4" Eyebolt	AN43B-14A	2
15 .	1/4" Thin Washer	AN960-416L	2
16 .	1/4" Thick Washer	AN960-416	2
17 .	1/4" Tensile Nut	AN365-428A	4

*Builder must modify, refer to text for instructions.

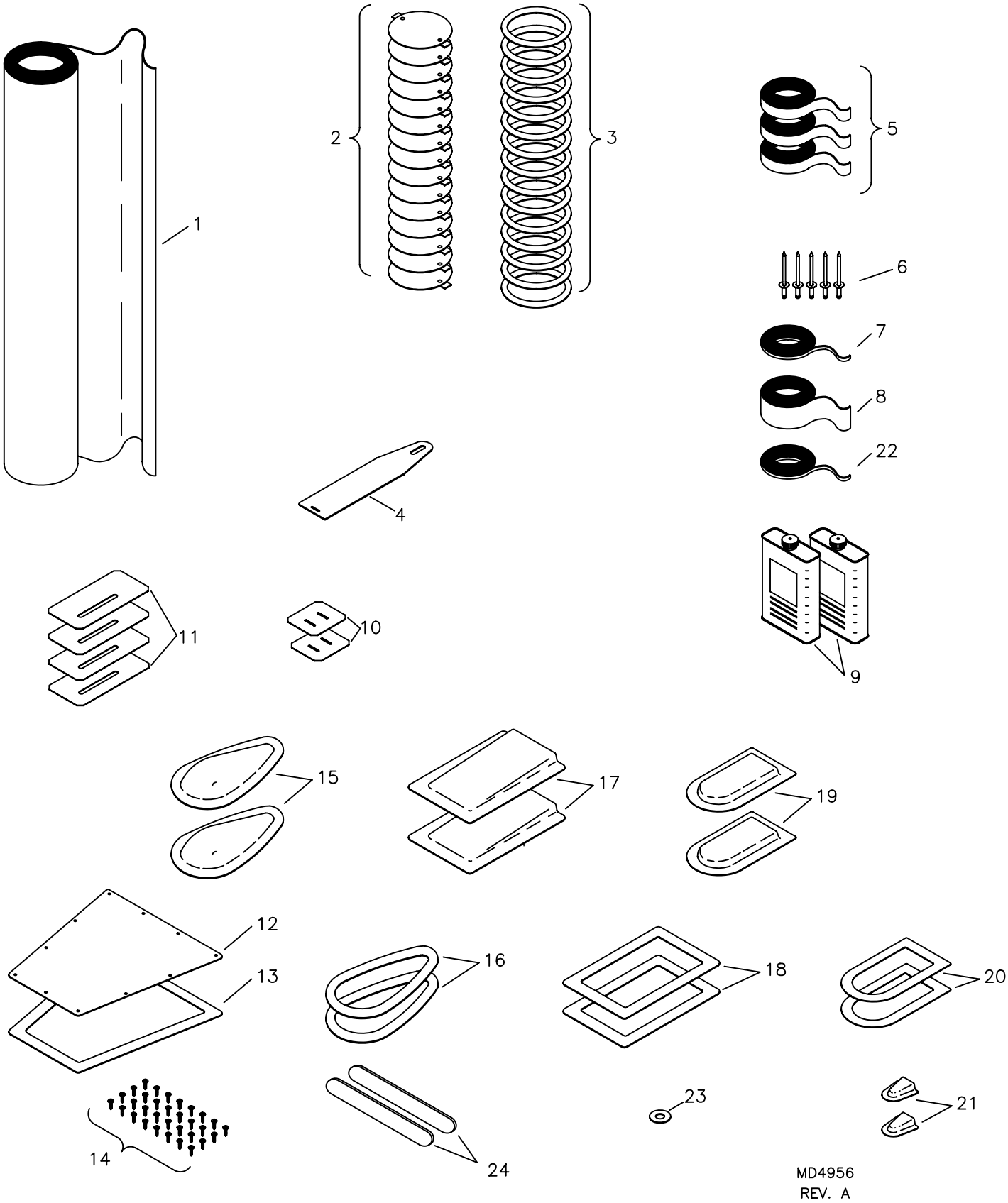

RANS S-6S COYOTE II
SPORT WING: COVERING SUPPLIES

S-6S COYOTE II - SPORT WING: COVERING SUPPLIES

#	DESCRIPTION	PART NUMBER	QUANTITY	
1 .	Aircraft Fabric	CV-S6S-SPORTWING	36	yds
2 .	Inspection Plate (Paint Shop)	CV-IP	15	
3 .	Inspection Ring	CV-IR	15	
4 .	Trim Cable Exit	KPCV0040	1	
4 .	Trim Cable Exit	KPCV0040	1	
5 .	2" Surface Tape	2 TAPE	3	rls
6 .	1/8" Aluminum Rivet - Avex	1691-0410	630	
7 .	Cover Strap	KPCV0012	50	
8 .	4" Surface Tape	4 TAPE	35	ft
9 .	U-500 Urethane Adhesive	KSCV0001	1	gal
10 .	Jury Strut Bracket Exit	KPCV0036	2	
11 .	Leading Edge Strut Plate Lexan Reinforcement	KPCV0039	4	
12 .	Tail Access Plate (Paint Shop)	KPCV0004	1	
13 .	Tail Access Ring	KPCV0003	1	
14 .	#4 Small Pan Head Screw	4X1/4 PHS	70	
15 .	Flap Exit Fairing	CV-FX	2	
16 .	Flap Exit Ring	KPCV0006	2	
17 .	Aileron Exit	KPWI0349	2	
18 .	Aileron Exit Ring	KPWI0348	2	
19 .	Elevator Yoke Exit	CV-EX	2	
20 .	Elevator Yoke Exit Ring	KPCV0007	2	
21 .	Rudder Cable Exit	CV-RX	2	
22 .	2 Way Tape	2W-TAPE	1	rl
23 .	Drain Grommet	KSCV0003	1	
24 .	Bolt Cover	KPWI0208	2	

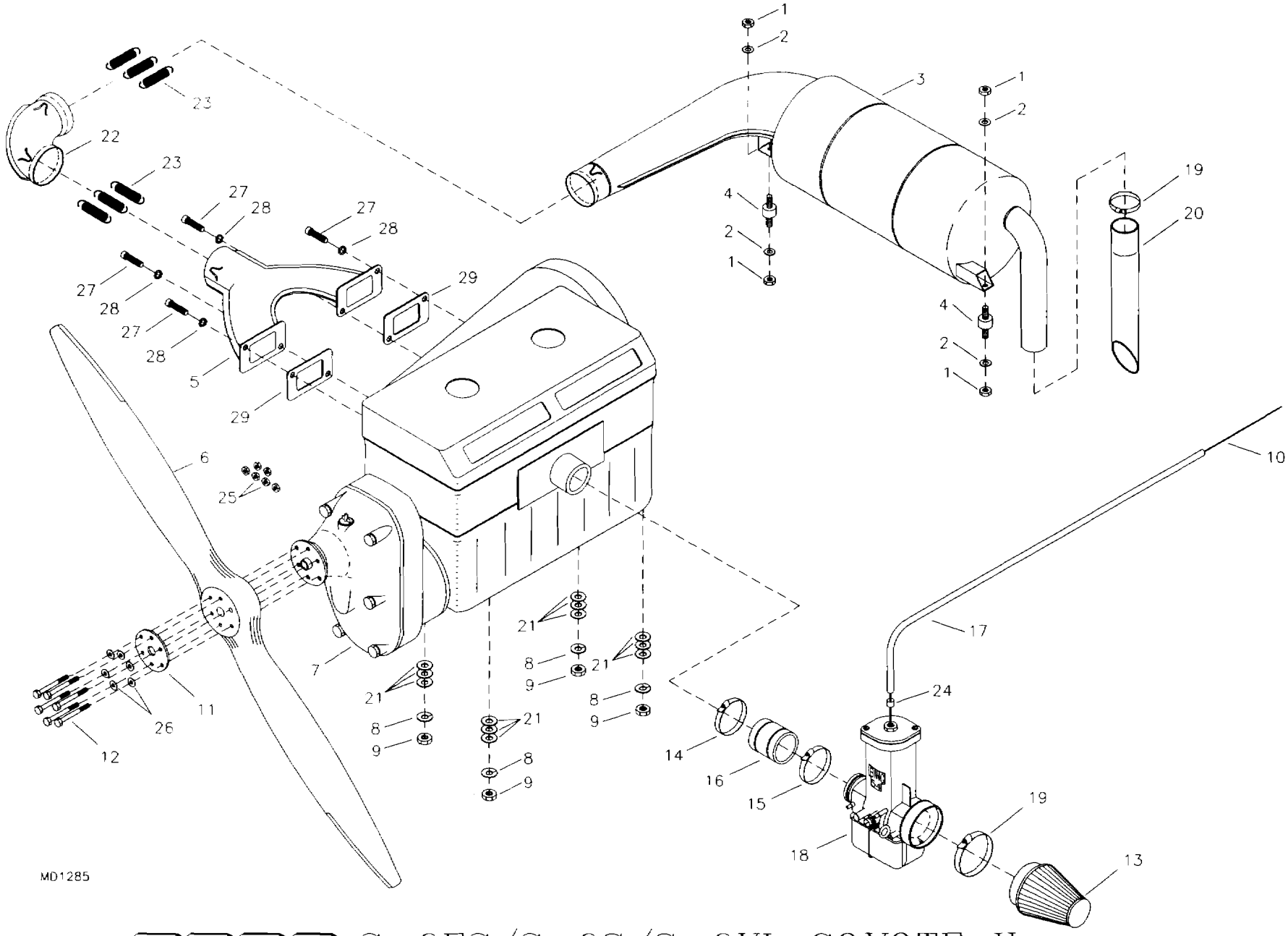

RANS S-6ES/S-6S/S-6XL COYOTE II
503 ENGINE ASSEMBLY

S-6S COYOTE II - 503 ENGINE

#	DESCRIPTION	PART NUMBER	QUANTITY
1.	1/4" Coarse Thread Nut	EG-1/4NC	4
2.	1/4" Loc Washer	AN935-416L	4
3.	Muffler, 503	EG-MUFF	1
4.	Rubber Isolator	EG-RI	2
5.	Exhaust Manifold, 503	KSEX0008	1
6.	Propeller	EG-PROP	1
7.	Rotax 503 Engine (Upon Request)	EG-EG-503	1
8.	Loc Washer *	—	0
9.	Nut *	—	0
10.	Throttle Cable, 105", 503DC	EG-T-CAB	2
10.	Throttle Cable, 105", 503SC	EG-T-CAB	1
11.	Prop Plate *	—	0
12.	1/4" Bolt	AN4-35A	6
13.	Air Filter, K & N (503 DC)	EG-AF	2
13.	Air Filter, K & N (503 SC)	EG-AF	1
14.	Air Filter Clamp **	—	0
15.	Carb Clamp *	—	0
16.	Carb Boot *	—	0
17.	Throttle Cable Housing, 36", 503DC	EG-T-CAB-H	2
17.	Throttle Cable Housing, 36", 503SC	EG-T-CAB-H	1
18.	Bing Carburetor *	—	0
19.	Hose Clamp, 2 1/4"	5-5228	1
20.	Muffler Extension	EG-MEXT	1
21.	7/16" Thick Washer	AN960-716	12
22.	Muffler Elbow	EG-MUFF-ELBOW-503/582	1
23.	Muffler Springs - 503	EG-MUFF-SPRINGS	6
24.	Cable Ferrule Cap, 503SC	ENDCAP-12000	1
24.	Cable Ferrule Cap, 503DC	ENDCAP-12000	2
25.	1/4" Tensile Nut	AN365-428A	6
26.	1/4" Thick Washer	AN960-416	6
27.	10MM Shoulder Screw *	—	0
28.	10MM Loc Washer *	—	0
29.	Exhaust Gasket *	—	0

*Supplied with engine.
**Supplied with filter.

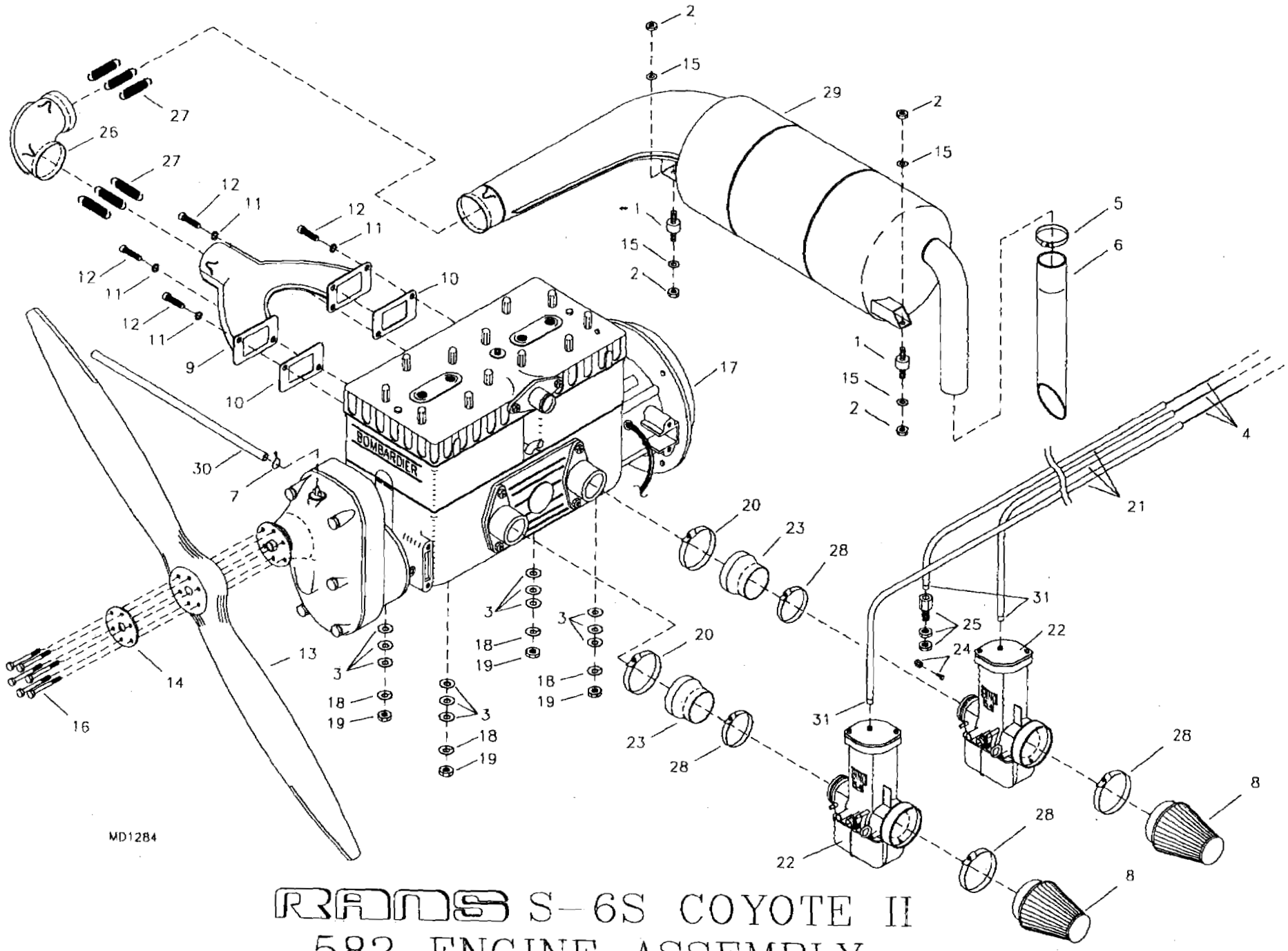

RANS S-6S COYOTE II
582 ENGINE ASSEMBLY

S-6S COYOTE II - 582 ENGINE

#	DESCRIPTION	PART NUMBER	QUANTITY
1.	Rubber Isolator	EG-RI	2
2.	1/4" Coarse Thread Nut	EG-1/4NC	4
3.	7/16" Thick Washer	AN960-716	12
4.	Throttle Cable, 105"	EG-T-CAB	3
5.	Hose Clamp, 2 1/4"	5-5228	1
6.	Muffler Extension	EG-MEXT	1
7.	Safety Wire	SAFETY WIRE	0
8.	Air Filter, K & N	EG-AF	2
9.	Exhaust Manifold, 582	KSEX0007	1
10.	Exhaust Gasket *	---	0
11.	10MM Loc Washer *	---	0
12.	10MM Shoulder Screw *	---	0
13.	Propeller	EG-PROP	1
14.	Prop Plate *	---	0
15.	1/4" Loc Washer	AN935-416L	4
16.	1/4" Bolt	AN4-35A	6
17.	Rotax 582 Engine	EG-EG-582	1
18.	Engine Loc Washer *	---	0
19.	Engine Stud Nut *	---	0
20.	Carb Clamp *	---	0
21.	Throttle Cable Housing, 36"	EG-T-CAB-H	3
22.	Bing Carburetor *	---	0
23.	Carb Boot *	---	0
24.	Wire Swivel/Screw Stop	2361	1
25.	Adjustable Cable Ferrule	2373	1
26.	Muffler Elbow	EG-MUFF-ELBOW-503/582	1
27.	Muffler Springs, 582	KSEX0002	6
28.	Air Filter Clamp **	---	0
29.	Muffler, 582	EG-MUFF	1
30.	1/4" Fuel Line, Blue (Gear Box Breather Line)	FS-FL	3 ft
31.	Cable Ferrule Cap	ENDCAP-12000	3

*Supplied with engine.
**Supplied with filter.

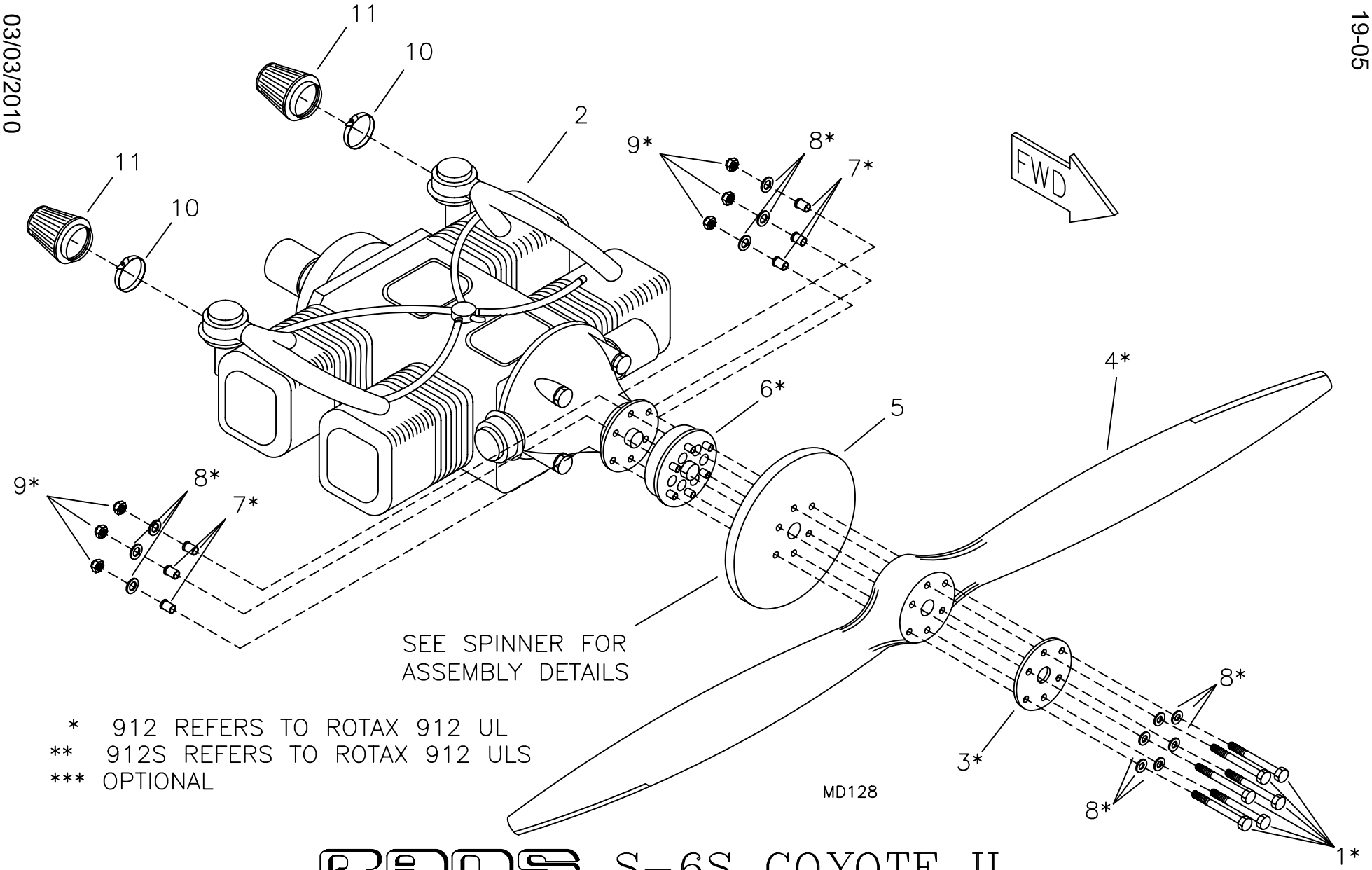

* 912 REFERS TO ROTAX 912 UL
** 912S REFERS TO ROTAX 912 ULS
*** OPTIONAL

RANS S-6S COYOTE II
912 UL* / 912 ULS** ENGINE AND OPTIONAL WOOD PROPELLER ASSEMBLY

S-6S COYOTE II - 912/912S ENGINE & OPTIONAL WOOD PROP ASSEMBLY

#	DESCRIPTION	PART NUMBER	QUANTITY
1 .	8MM Bolt, 912/912S ***	M8X1.25X140	6
2 .	Rotax 912ul Engine (Upon Request)	EG-EG-912	1
2 .	Rotax 912uls Engine (Upon Request)	KSPW0063	1
3 .	Crush Plate, 912/912S ***	KPPW0183	1
4 .	912S Propeller ***	KSPW0061	1
4 .	912 Propeller ***	KSPW0004	1
5 .	Spinner Backing Plate, 912/912S , 12" **	KPPW0042	0
6 .	1" Prop Extension Assembly,912/912S ***	KAPW0024	1
7 .	Flange Bushing, 912/912S ***	KPPW0038	6
8 .	5/16" Thick Washer, 912/912S ***	AN960-516	12
9 .	Metric Nut, 912/912S ***	M8X1.25 NUT	6
10 .	63MM Clamp *	EG-AF-CLAMP	0
11 .	Air Filter	EG-AF-912	2

*Supplied with filter.
**Referenced from Spinner.
*** Optional Prop

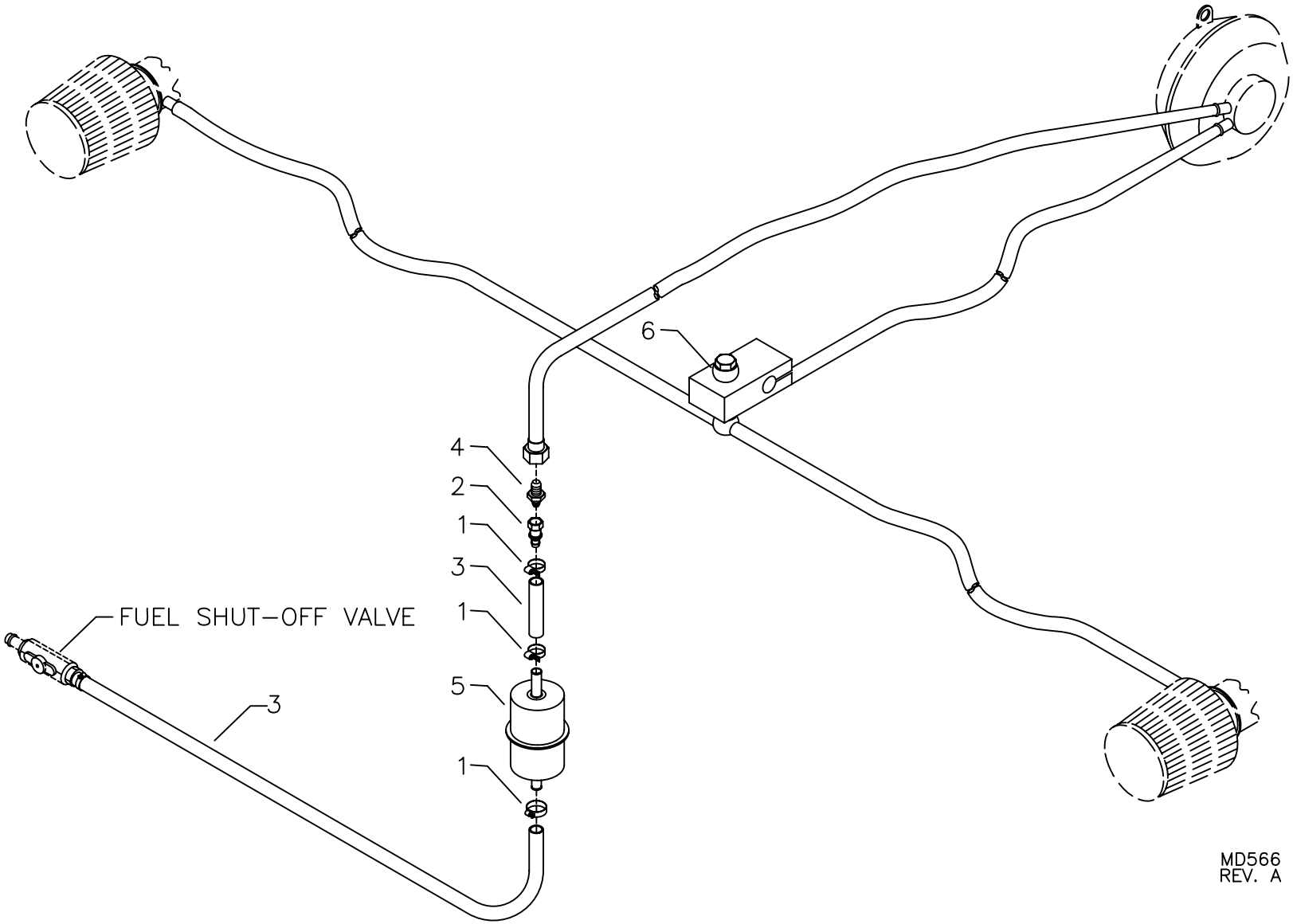

RANS S-6S COYOTE II
912 FUEL PUMP HOOK UP

S-6S COYOTE II - 912/912S FUEL/CARB/PUMP HOOK UP

#	DESCRIPTION	PART NUMBER	QUANTITY
1.	Small Hose Clamp	5-6202	3
2.	Reducer	AN919-6D	1
3.	1/4" Black Fuel Line *	KSFS0002	0
4.	1/4" Hose Fitting	30682-4-4	1
5.	Fuel Filter **	-----	0
6.	Bushing	BPBK0018	1

* Referenced from Wing Tank Fuel System
** Contact ROTAX for recommended filter

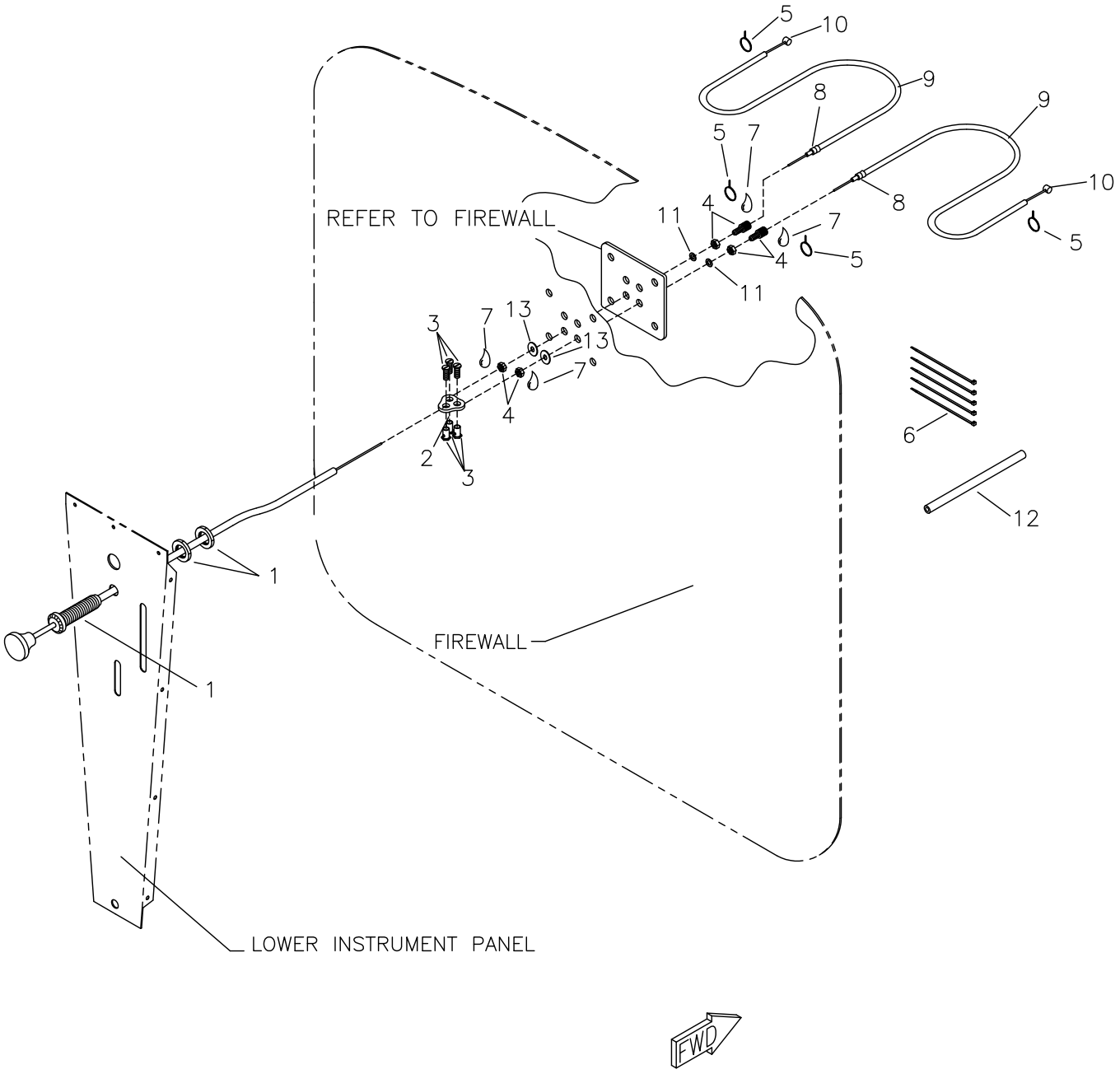

MD5565

RANS S-6S COYOTE II
912UL/912ULS CHOKE SYSTEM

S-6S COYOTE II - 912/912S CHOKE SYSTEM

#	DESCRIPTION	PART NUMBER	QUANTITY
1 .	Push Pull Choke Cable	4-336	1
2 .	Mixer Plate	KPPW0076	1
3 .	Wire Stop/Screw	2361	3
4 .	Adjustable Cable Ferrule	12553	2
5 .	Safety Wire *	-----	0
6 .	Zip Ties	N-TIES	5
7 .	Loctite *	-----	0
8 .	Cable Ferrule Cap	ENDCAP-12000	2
9 .	Cable Housing, 43"	CK-CAB-H	2
10 .	Choke Cable	BC-105	2
11 .	1/4" Thin Washer	AN960-416L	2
12 .	1/4" Blue Fuel Line	FS-FL	0.5 ft
13 .	1/4" Plastic Washer	PW-4	2

* Builder Supplied

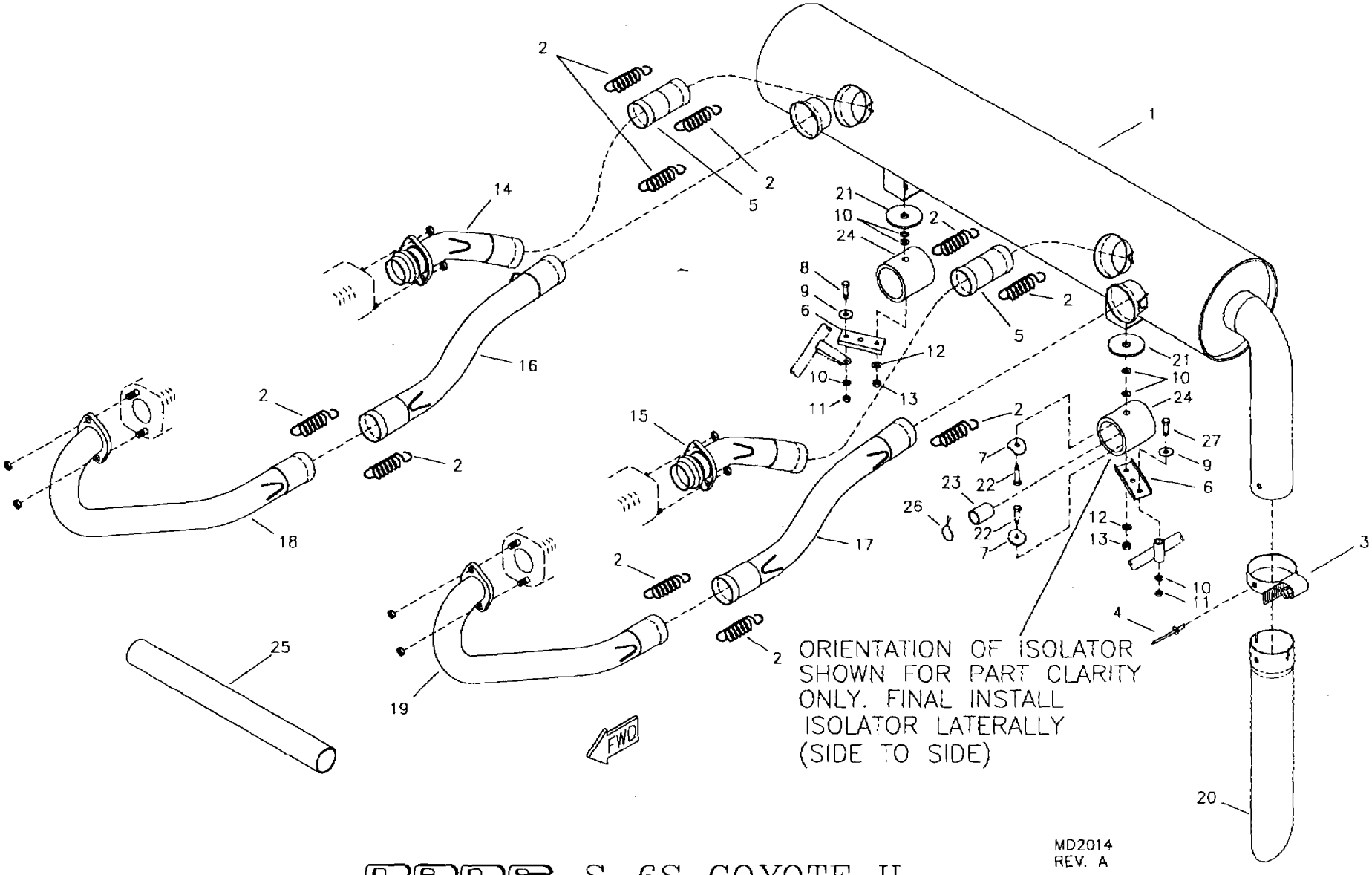

RANS S-6S COYOTE II
912 MUFFLER ASSEMBLY

S-6S COYOTE II - 912/912S MUFFLER ASSEMBLY

#	DESCRIPTION	PART NUMBER	QUANTITY
1 .	S-6 912 Muffler	KPEX0002	1
2 .	Muffler Springs - 912	KSEX0002	10
3 .	Hose Clamp, 2 1/4"	5-5228	1
4 .	1/8" Stainless Steel Pop Rivet - Cherry Q	CCPQ-45	1
5 .	Muffler Canister Coupler	KPEX0026	2
6 .	Muffler Attach Channel	KPEX0027	2
7 .	Formed Washer	KPAC0053	4
8 .	1/4" Bolt	AN4-4A	1
9 .	1/4" Large Washer	AN970-4	2
10 .	1/4" Thick Washer	AN960-416	6
11 .	1/4" Shear Nut	AN364-428A	2
12 .	1/4" Loc Washer	AN935-416L	2
13 .	6MM Nut	6MM HEX NUT	2
14 .	AFT Exhaust Manifold, RH	KPEX0025	1
15 .	AFT Exhaust Manifold, LH	KPEX0024	1
16 .	FWD Muffler Manifold #2, RH	KPEX0023	1
17 .	FWD Muffler Manifold #2, LH	KPEX0021	1
18 .	FWD Muffler Manifold #1, RH	KPEX0022	1
19 .	FWD Muffler Manifold #1, LH	KPEX0020	1
20 .	Muffler Extension	KPEX0009	1
21 .	1/8" Aluminum Washer	EG-AW	2
22 .	6MM Bolt	6MMX20MM	4
23 .	Rubber Hose, 3/4" O.D. x 1 3/8" *	KAAC0017-1	0
24 .	Rubber Hose, 1 1/4" O.D. x 1 3/8" *	KAAC0017-2	0
25 .	912 Muffler - Raw Stock Kit	KAAC0017	1
26 .	Safety Wire	SAFETY WIRE	0
27 .	1/4" Bolt	AN4-11A	1

*Builder must fabricate from raw stock.

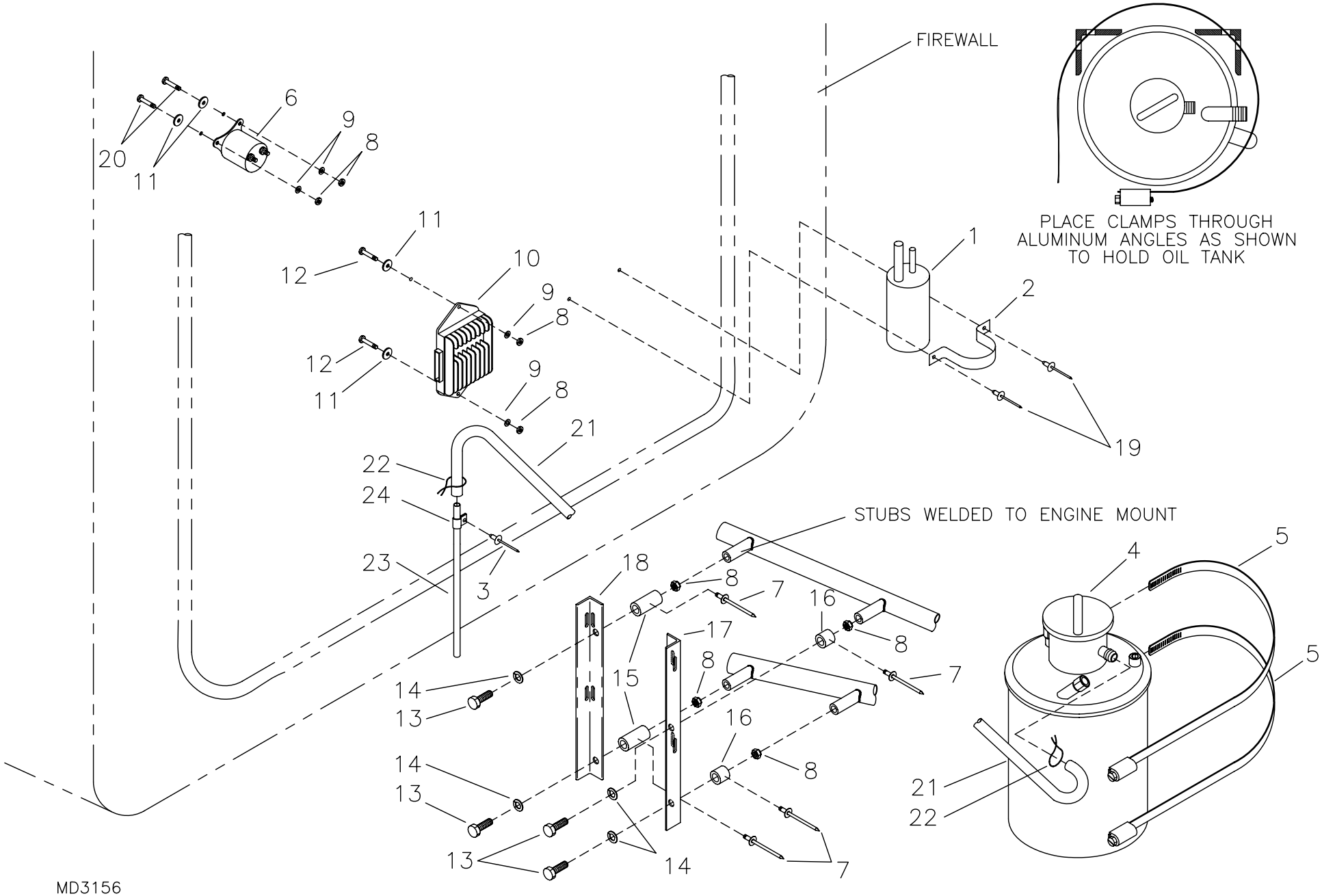

MD3156
REV. A

RANS S-6S COYOTE II
912/912S ENGINE ACCESSORY INSTALLATION

S-6S COYOTE II - 912/912S ACCESSORY INSTALLATION

#	DESCRIPTION	PART NUMBER	QUANTITY
1.	Coolant Recovery Bottle ***	-----	0
2.	Coolant Recovery Clamp ***	-----	0
3.	3/16" Aluminum Pop Rivet - Cherry Q	AAPQ-62	1
4.	Oil Tank **	-----	0
5.	Hose Clamp	5-5288	2
6.	Starter Solenoid **	-----	0
7.	1/8" Stainless Steel Pop Rivet - Cherry Q	CCPQ-41	4
8.	3/16" Shear Nut	AN364-1032A	8
9.	3/16" Thick Washer	AN960-10	4
10.	Regulator Rectifier **	-----	0
11.	3/16" Large Washer	AN970-3	4
12.	3/16" Bolt	AN3-5A	2
13.	3/16" Truss Head Bolt	AN526-C1032R12	4
14.	3/16" Thin Washer	AN960-10L	4
15.	Oil Tank Attach Bushings, AFT	KPPW0055	2
16.	Oil Tank Attach Bushings, FWD	KPPW0056	2
17.	Oil Tank Aluminum Angle, FWD	KPPW0050	1
18.	Oil Tank Aluminum Angle, AFT	KPPW0051	1
19.	3/16" Aluminum Pop Rivet - Cherry Q ***	AAPQ-62	0
20.	3/16" Bolt	AN3-4A	2
21.	3/8" Black Overflow Line	27004	3 ft
22.	Safety Wire	SAFETY WIRE	0
23.	Aluminum Tube, 3/8" x .058 x 12" *	KAAC0004-6	0
24.	Cushioned Tube Clamp	MS21919WDG6	1

*Builder must fabricate from raw stock.
**Supplied with Engine.
***Referenced from cooling system.

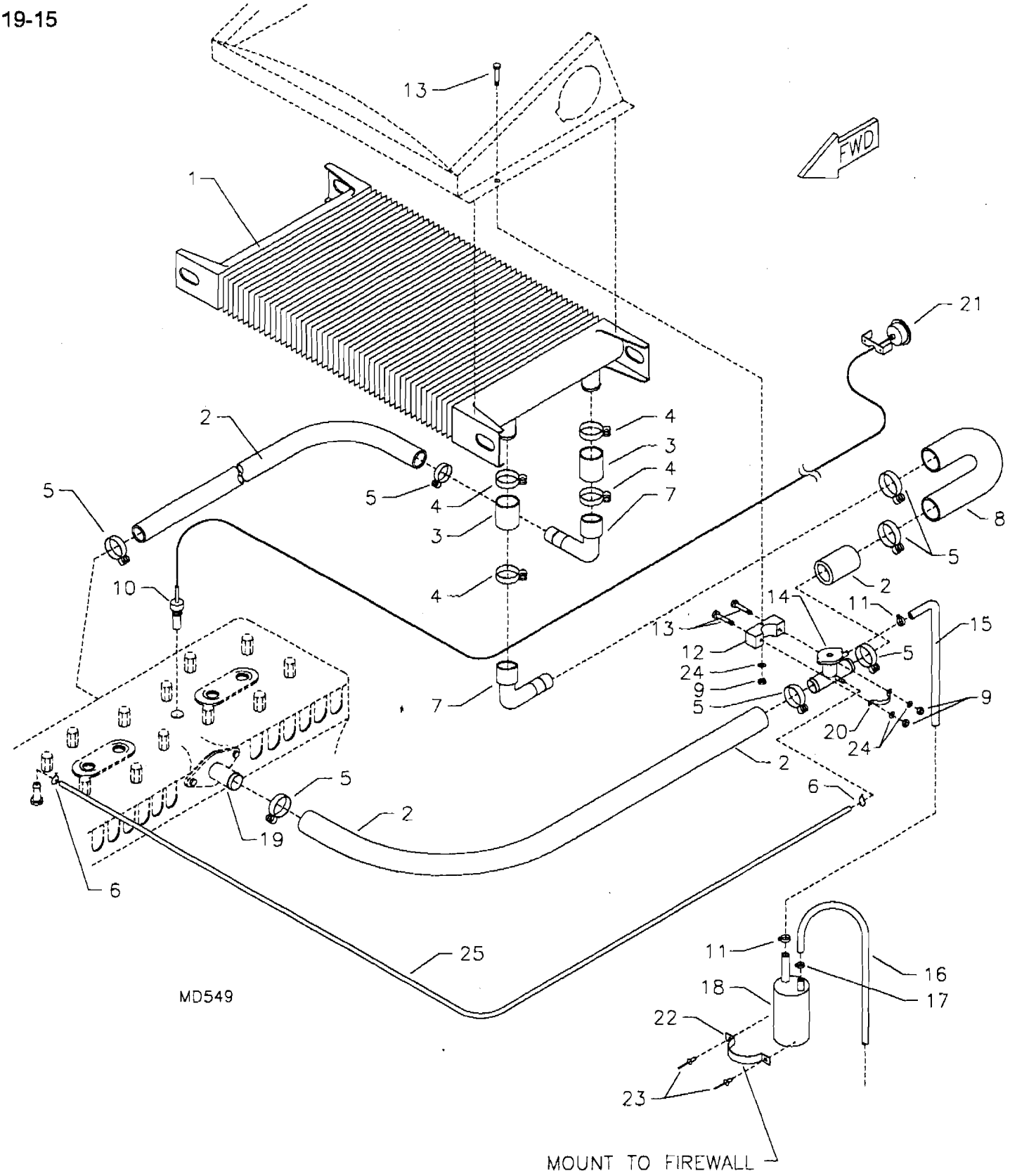

RANS S-6ES\S-6S COYOTE II
582 COOLING SYSTEM

S-6S COYOTE II - 582 COOLING SYSTEM

#	DESCRIPTION	PART NUMBER	QUANTITY
1.	Radiator	EGCS-RAD	1
2.	1" Radiator Hose	RADIATOR HOSE	76 in
3.	1 1/4" Radiator Hose	EGCS-RHOSE	2
4.	Hose Clamp, 1 3/4"	5-5220	4
5.	Hose Clamp, 1 1/2"	5-5216	8
6.	Safety Wire	SAFETY WIRE	0
7.	Reducer Elbow	EGCS-RC-90	2
8.	Pre-Formed Radiator "V" Hose	KSPW0075	1
9.	3/16" Shear Nut	AN364-1032A	3
10.	Water Temp Probe ***	KSPW0016-1	0
11.	Line Clamp, 3/8" *	FS-LCL 3/8	1
12.	Mount Block	EGCS-FNMPVC	1
13.	3/16" Bolt	AN3-13A	3
14.	Filler Cap Tee	EGCS-FCT-N	1
15.	5/16" Overflow Hose	EGCS-OFH	14 in
16.	1/4" Fuel/Pitot/Static Line, Blue	FS-FL	2 ft
17.	Line Clamp, 5/16" I.D. *	FS-LCL 5/16ID	1
18.	Coolant Recovery Bottle	EGCS-CRB	1
19.	Water Outlet Socket	922-025	1
20.	Filler "T" Mount	EGCS-FNSTRAP	1
21.	Water Temperature Gauge Electrical **	KSPW0016	0
22.	Coolant Recovery Clamp	FS-HS	1
23.	3/16" Aluminum Pop Rivet - Cherry Q	AAPQ-62	2
24.	3/16" Thick Washer	AN960-10	3
25.	1/8" Black Coolant Pressure Line	KSFS0001	2 ft
26.	Safety Wire	SAFETY WIRE	0

*Two sizes of fuel line clamps are used. Please pay close attention to where used. To tell what siz close the clamp completely & measure across inside diameter. They should be 5/16" or 3/8" depen
Reference electrical system. * Supplied with gauge.

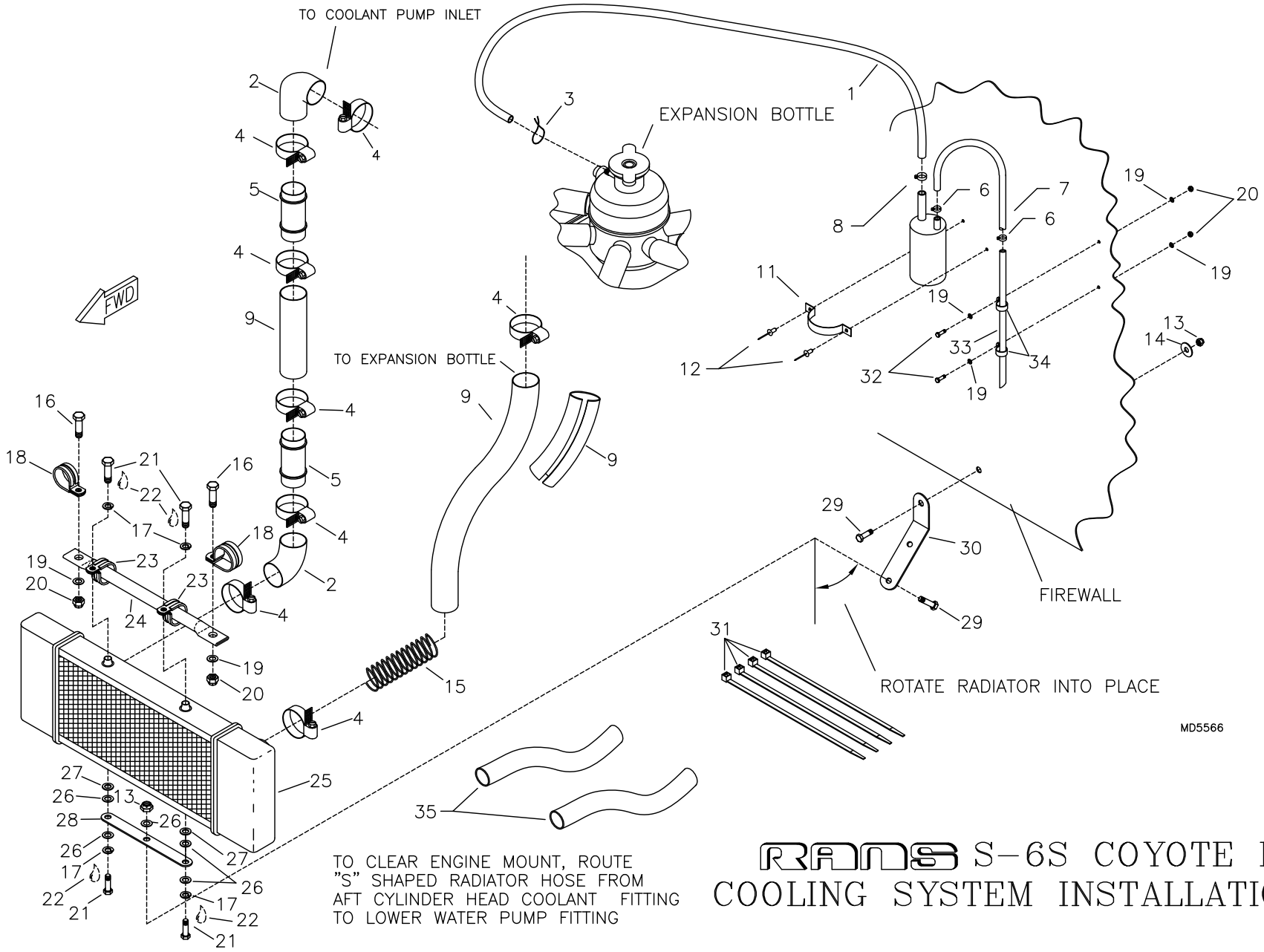

TO CLEAR ENGINE MOUNT, ROUTE "S" SHAPED RADIATOR HOSE FROM AFT CYLINDER HEAD COOLANT FITTING TO LOWER WATER PUMP FITTING

RANS S-6S COYOTE II COOLING SYSTEM INSTALLATION

S-6S COYOTE II - 912/912S COOLING SYSTEM

#	DESCRIPTION	PART NUMBER	QUANTITY
1 .	5/16" Overflow Hose	EGCS-OFH	3 ft
2 .	Pre-formed Radiator "U" Hose **	KSPW0075	1
3 .	Safety Wire *	-----	0
4 .	Hose Clamp - 1 1/2"	5-5216	8
5 .	Cooling Tube - Union	KPPW0189	2
6 .	Line Clamp, 5/16"	FS-LCL 5/16	2
7 .	1/4" Blue Hose	FS-FL	2 ft
8 .	Line Clamp, 3/8"	FS-LCL 3/8	1
9 .	1" Radiator Hose	RADIATOR HOSE	3 ft
10 .	Coolant Recovery Bottle	EGCS-CRB	1
11 .	Coolant Recovery Clamp	FS-HS	1
12 .	3/16" Aluminum Rivet - Cherry Q	AAPQ-62	2
13 .	1/4" Shear Nut	AN364-428A	4
14 .	1/4" Large Washer	AN970-4	1
15 .	Hose Spring	EGCS-HS	1
16 .	3/16" Bolt	AN3-5A	2
17 .	1/4" Loc Washer	AN935-416L	4
18 .	5/8" Cushioned Tube Clamp	MS21919-DG10	2
19 .	3/16" Thin Washer	AN960-10L	6
20 .	3/16" Shear Nut	AN364-1032A	4
21 .	6MM X 16MM Bolt	M6X16 BOLT	4
22 .	Loctite - Blue *	-----	0
23 .	3/8" Cushioned Tube Clamp	MS21919-WDG6	2
24 .	Radiator Support Tube	KPPW0290	1
25 .	Radiator	KSPW0071	1
26 .	1/4" Thin Washer	AN960-416L	6
27 .	1/4" Thick Washer	AN960-416	2
28 .	Radiator Support Bracket	KPAC0174	1
29 .	1/4" Bolt	AN4-5A	2
30 .	Bent Radiator Support Bracket	KPPW0291	1
31 .	Nylon Tie	N-TIES	4
32 .	3/16" Bolt	AN3-3A	2
33 .	Aluminum Overflow Tube, 1/4" x .028" x 8" ***	KAAC0004-4	0
34 .	Plain Clamp	AN742-D4	2
35 .	Pre-formed Radiator "S" Hose	KSPW0025	2

* Builder Supplied
** Builder Modifies
*** Builder must fabricate from raw stock.

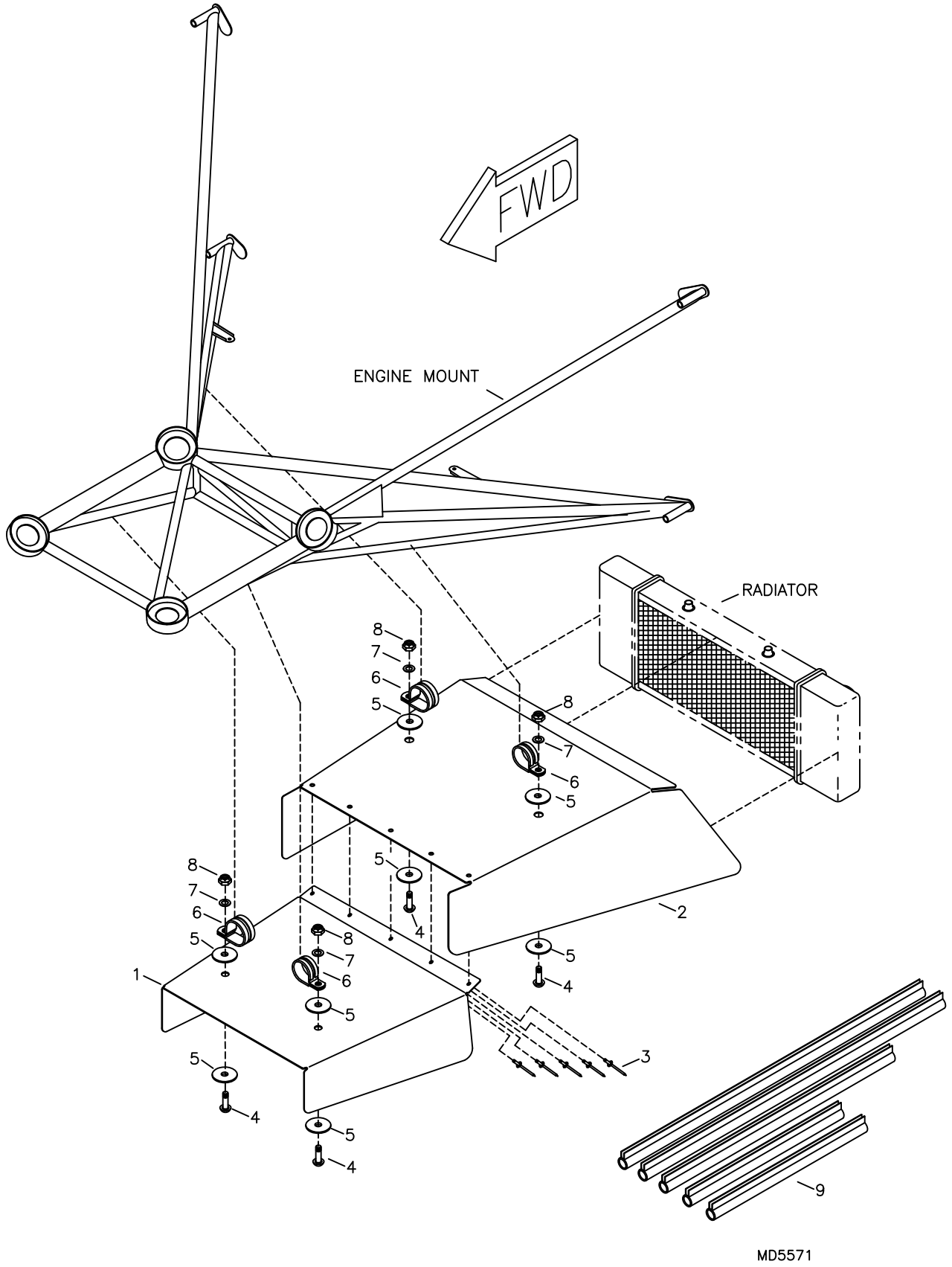

RANS S-6S COYOTE II
RADIATOR DUCT INSTALLATION

S-6S COYOTE II - 912/912S RADIATOR DUCT INSTALLATION

#	DESCRIPTION	PART NUMBER	QUANTITY
1 .	FWD Inlet Duct	KPPW0287	1
2 .	AFT Inlet Duct	KPPW0288	1
3 .	1/8" Aluminum Rivet - Cherry Q	AAPQ-41	5
4 .	3/16" Truss Head Bolt	AN526-C1032R12	4
5 .	3/16" Plastic Washer	PW-3	8
6 .	5/8" Cushioned Tube Clamp	MS21919-DG10	4
7 .	3/16" Thin Washer	AN960-10L	4
8 .	3/16" Shear Nut	AN364-1032A	4
9 .	Trimlock - Cushion Lip	4100C-1/16	4.5 ft

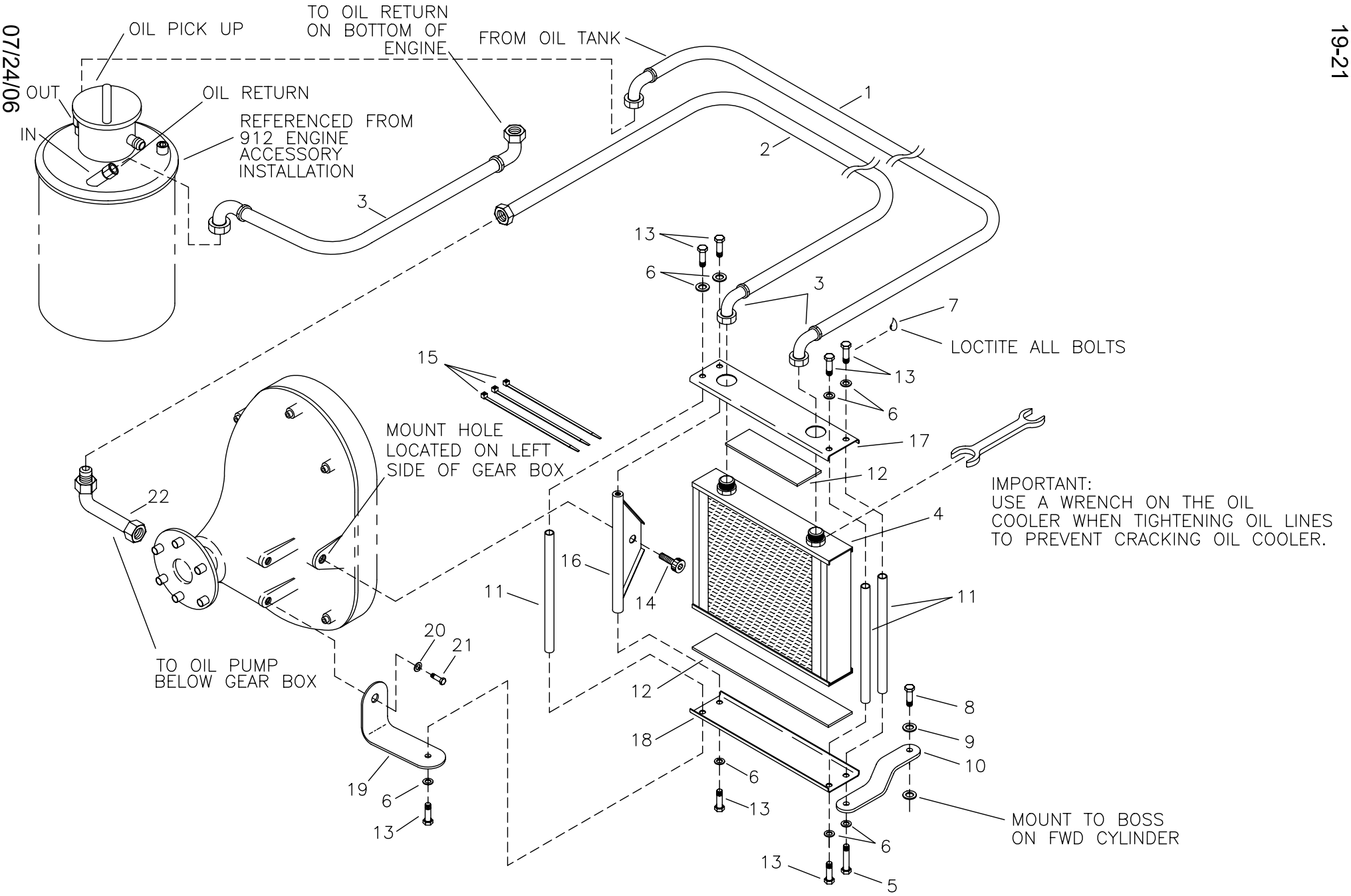

RAMS S-6S COYOTE II
912/912S OIL COOLER ASSEMBLY

S-6S COYOTE II - 912/912S OIL COOLER ASSEMBLY

#	DESCRIPTION	PART NUMBER	QUANTITY
1 .	Oil Hose Assembly - Tank to Cooler	KAPW0035	1
2 .	Oil Hose Assembly - Cooler to Pump	KAPW0036	1
3 .	Oil Hose Assembly - Return	KAPW0035	1
4 .	Oil Cooler	21608	1
5 .	3/16" Bolt	AN3-6A	1
6 .	3/16" Thin Washer	AN960-10L	8
7 .	Loctite Blue	LOC-TITE	0
8 .	6MM X 16MM Bolt	M6X16 BOLT	1
9 .	1/4" Thin Washer	AN960-416L	1
10 .	Bent Oil Cooler Mount - Outer	KPPW0259	1
11 .	Threaded Bushing	KPPW0180	3
12 .	.093 Silicone Sheet	KPPW0254	2
13 .	3/16" Bolt	AN3-3A	7
14 .	10MM x 20MM Bolt	10MMX20MM	1
15 .	Nylon Tie	N-TIES	3
16 .	Oil Cooler Mount	KPPW0258	1
17 .	Upper Oil Cooler Mount	KPPW0071	1
18 .	Lower Oil Cooler Mount	KPPW0072	1
19 .	Oil Cooler Mount-FWD	KPPW0260	1
20 .	5/16" Thick Washer	AN960-516	1
21 .	8MM x 20MM Bolt	M8X20 BOLT	1
22 .	90 Fitting - Long	KSPW0082	1

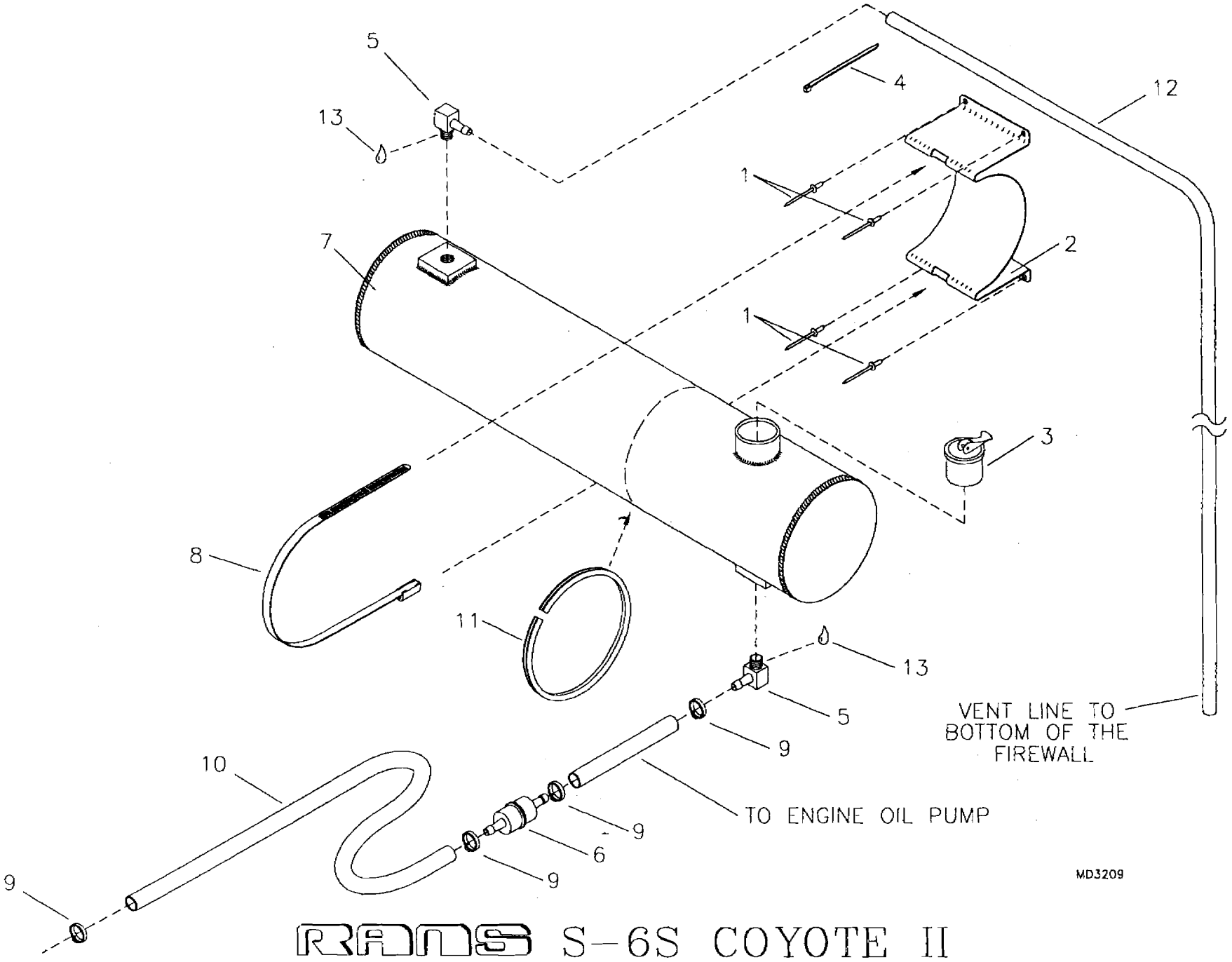

RANS S-6S COYOTE II
582 OIL INJECTION TANK MOUNT ASSEMBLY

S-6S COYOTE II - 582 OIL INJECTION TANK MOUNT

#	DESCRIPTION	PART NUMBER	QUANTITY
1.	1/8" Stainless Steel Pop Rivet - Cherry Q	CCPQ-42	4
2.	Oil Tank Strap	EGCS-OTS	1
3.	7/8" Expansion Cap	2598K29	1
4.	Zip Ties	ZIP TIES	1
5.	90 Withdrawal Fitting	8342	1
6.	Oil Filter	414-5365	1
7.	Oil Tank	OI-TANK	1
8.	2 3/4" to 4" Hose Clamp	5-5256	1
9.	Line Clamp, 3/8" *	FS-LCL 3/8	4
10.	1/4" Fuel/Pitot/Static Line, Blue	FS-FL	2 ft
11.	Rubber Trim	X1011	11 in
12.	1/4" Fuel/Pitot/Static Line, Blue	FS-FL	3 ft
13.	Loctite Blue	LOC-TITE	1

*Two sizes of fuel line clamps are used. Please pay close attention to where used.
To tell what size a clamp is, close the clamp completely & measure across inside diameter.
They should be 5/16" or 3/8" depending on the clamp.

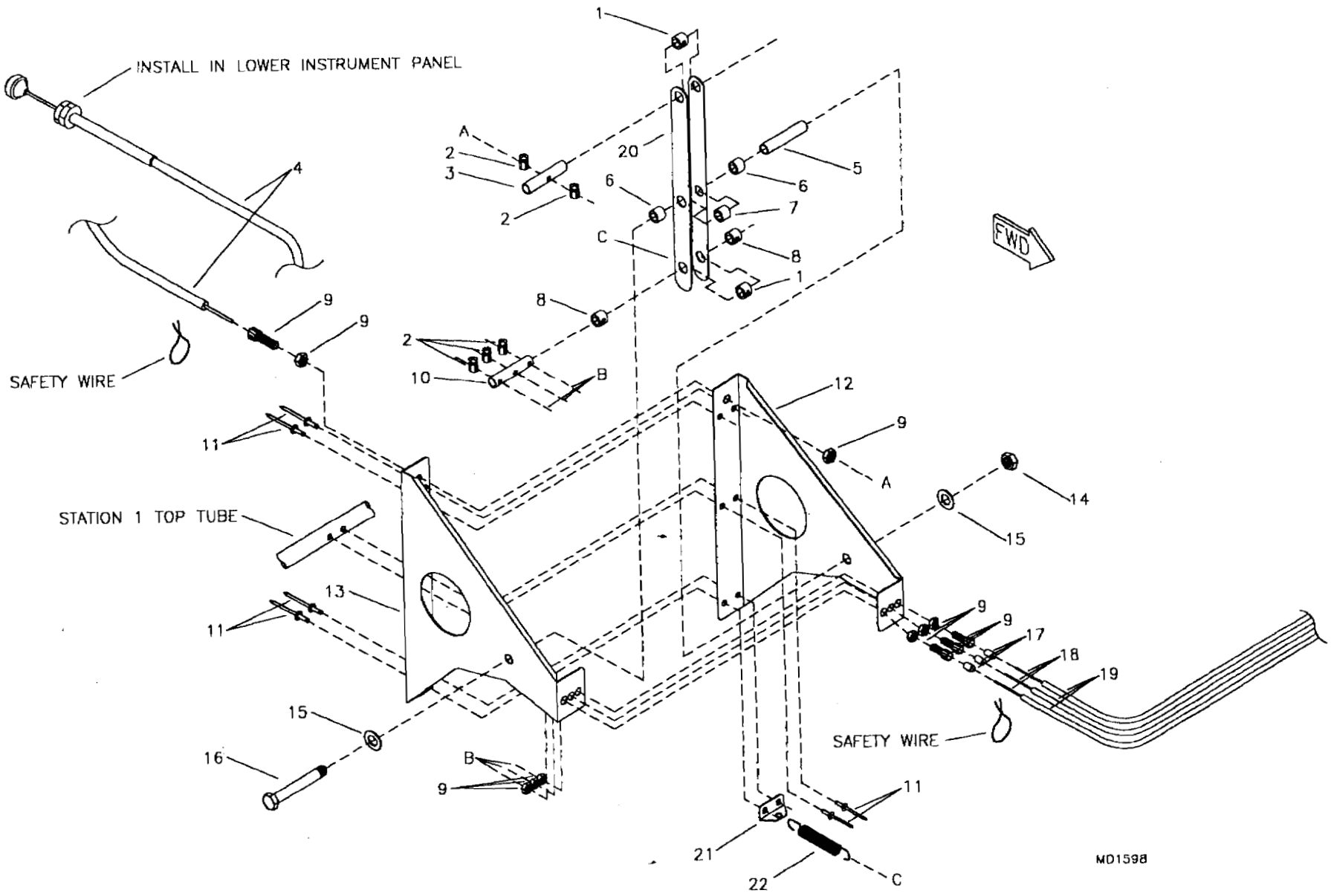

RANS S-6S COYOTE II
503/582 THROTTLE & MOTION CONVERTER

S-6S COYOTE II - 503/582 THROTTLE

#	DESCRIPTION	PART NUMBER	QUANTITY
1.	Aluminum Bushing, 3/8" x .058 x 1/2" *	KAAC0004-6	0
2.	Wire Stop/Screw, 582	2360	5
2.	Wire Stop/Screw, 503SC	2360	3
2.	Wire Stop/Screw, 503DC	2360	4
3.	Aluminum Bushing, 1/4" x .028 x 7/8" *	KAAC0004-4	0
4.	Throttle	05-08036	1
5.	Aluminum Bushing, 1/4" x .028 x 1 5/16" *	KAAC0004-4	0
6.	Aluminum Bushing, 3/8" x .058 x 3/8" *	KAAC0004-6	0
7.	Aluminum Bushing, 3/8" x .058 x 1/2" *	KAAC0004-6	0
8.	Aluminum Bushing, 3/8" x .058 x 3/8" *	KAAC0004-6	0
9.	Adjustable Cable Ferrule, 503SC	12553	2
9.	Adjustable Cable Ferrule, 503DC	12553	3
9.	Adjustable Cable Ferrule, 582	12553	4
10.	Aluminum Bushing, 3/8" x .058 x 1 1/4" *	KAAC0004-6	0
11.	1/8" Aluminum Pop Rivet - Cherry Q	AAPQ-44	6
12.	Throttle Motion Converter Side Plate, LH	KPPW0031	1
13.	Throttle Motion Converter Side Plate, RH	KPPW0030	1
14.	3/16" Shear Nut	AN364-1032A	1
15.	3/16" Thin Washer	AN960-10L	2
16.	3/16" Bolt	AN3-16A	1
17.	Cable Ferrule Cap, 503DC	ENDCAP-12000	2
17.	Cable Ferrule Cap, 503SC	ENDCAP-12000	1
17.	Cable Ferrule Cap, 582	ENDCAP-12000	3
18.	Throttle Cable **	EG-T-CAB	0
19.	Throttle Cable Housing ***	EG-T-CAB-H	0
20.	Throttle Motion Converter Arm	KPPW0032	1
21.	Attach Angle	KPAC0025	1
22.	Power Spring	S1016	1

*Builder must fabricate from raw stock, see detail drawing.
**See engine.

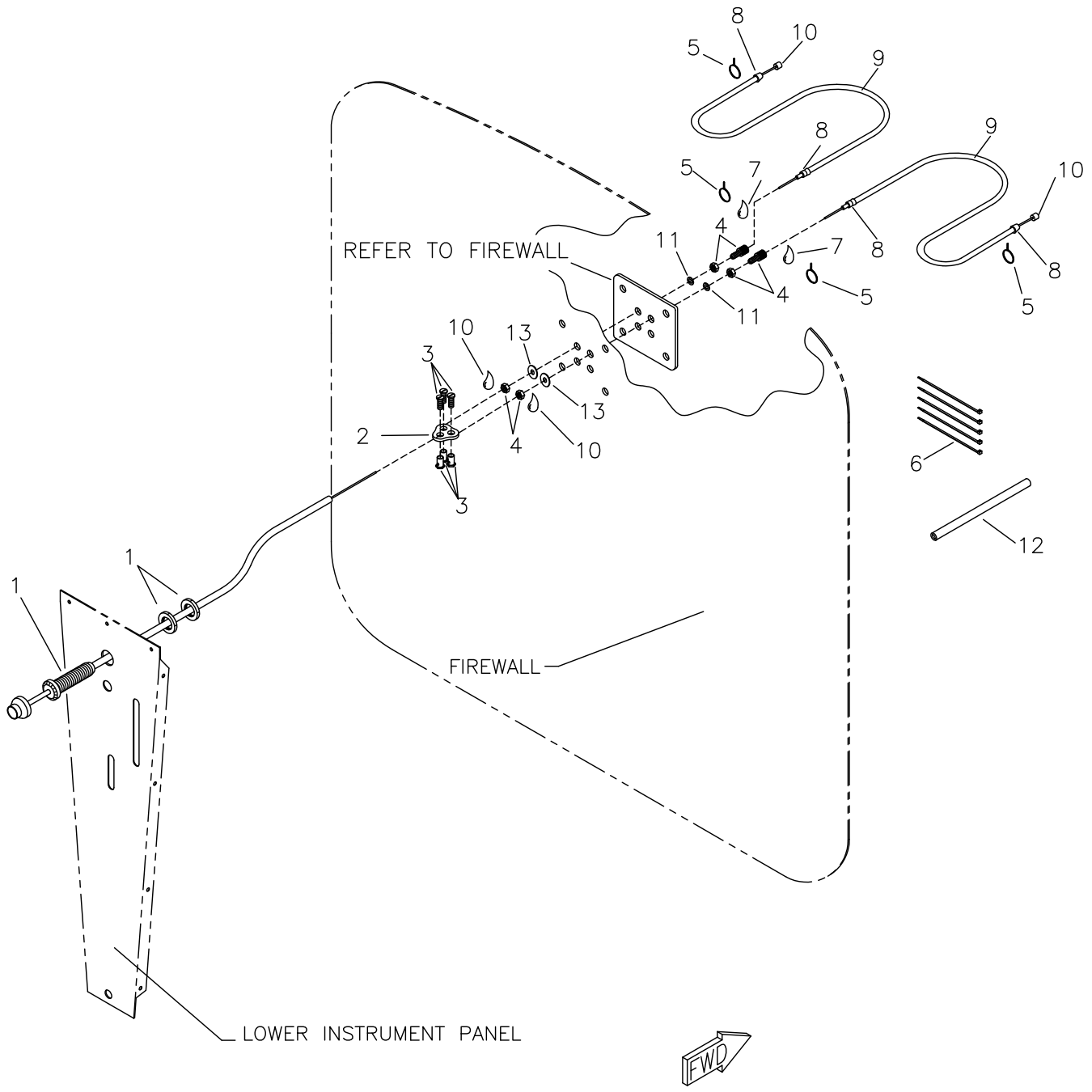

MD5565

RANS S-6S COYOTE II
912UL/912ULS THROTTLE ASSEMBLY

S-6S COYOTE II - 912UL/912ULS THROTTLE ASSEMBLY

#	DESCRIPTION	PART NUMBER	QUANTITY
1 .	Throttle	05-08036	1
2 .	Mixer Plate	KPPW0076	1
3 .	Wire Stop/Screw	2361	3
4 .	Adjustable Cable Ferrule	12553	2
5 .	Safety Wire*	-----	0
6 .	Nylon Tie	N-TIES	5
7 .	Loctite Blue*	-----	0
8 .	Cable Ferrule Cap	ENDCAP-12000	4
9 .	Throttle Cable Housing	EG-T-CAB-H	8 ft
10 .	Throttle Cable	EG-T-CAB	2
11 .	1/4" Thin Washer	AN960-416L	2
12 .	1/4" Blue Fuel Line	FS-FL	0.5 ft
13 .	1/4" Plastic Washer	PW-4	2

* Builder Supplied

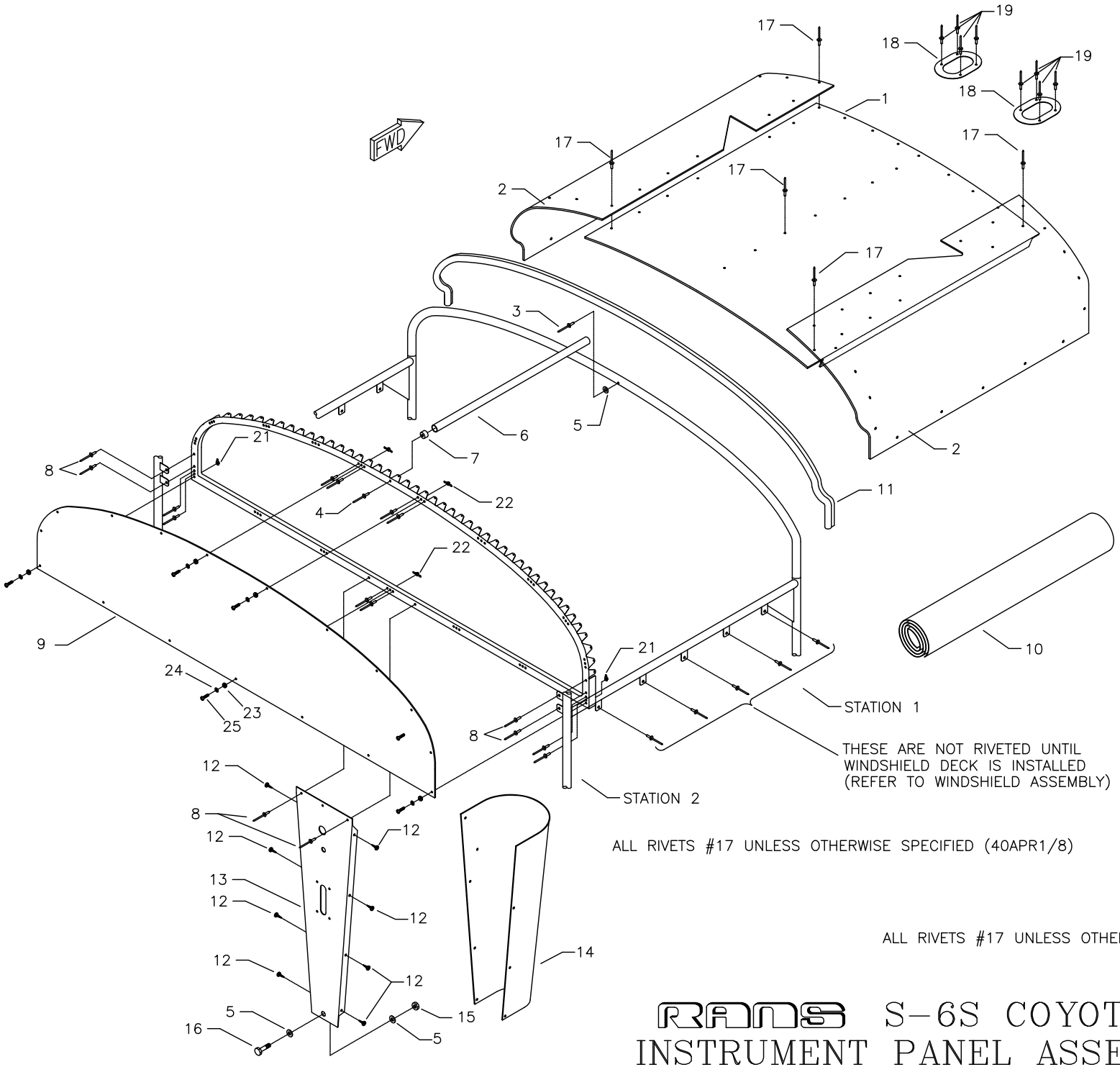

ALL RIVETS #17 UNLESS OTHERWISE SPECIFIED (40APR1/8)

ALL RIVETS #17 UNLESS OTHERWISE SPECIFIED (40APR1/8)

MD559
REV. C

RANS S-6S COYOTE II
INSTRUMENT PANEL ASSEMBLY

S-6S COYOTE II - INSTRUMENT PANEL

#	DESCRIPTION	PART NUMBER	QUANTITY
1 .	Instrument Panel Cover - Center	KPIP0104	1
2 .	Instrument Panel Cover - Outboard	KPIP0105	2
3 .	3/16" Aluminum Rivet - Cherry Q	AAPQ-64	1
4 .	1/8" Stainless Steel Rivet - Cherry Q	CCPQ-46	1
5 .	3/16" Thick Washer	AN960-10	3
6 .	Instrument Panel Brace Tube, 1/2" x .035 x X" *	KAAC0004-10	0
7 .	Center Cover Plastic Fitting Plug	CC-PF	1
8 .	1/8" Stainless Steel Rivet - Cherry Q	CCPQ-42	7
9 .	Instrument Panel - Standard Blank	KPIP0134	1
10 .	Instrument Panel Cover Fabric	IP-FAB	5 ft
11 .	Trimlock - Cushion Lip	4100C-1/16	5 ft
12 .	#8 Pan Head Screw	8X1/2 PHS	8
13 .	Lower Instrument Panel	KPIP0103	1
14 .	Lower Instrument Panel Dust Cover	KPIP0003	1
15 .	3/16" Shear Nut	AN364-1032A	1
16 .	3/16" Bolt	AN3-4A	1
17 .	3/32" Aluminum Pop Rivet	40APR1/8	106
18 .	Instrument Panel Closeout	KPIP0107	2
19 .	1/8" Aluminum Rivet - Cherry Q	AAPQ-42	8
20 .	Instrument Panel Frame	KPIP0133	1
21 .	8-32 Single-Ear Nut Plate	MS21051-08	2
22 .	8-32 Nut Plate	MS21047-08	15
23 .	3/16" Rubber Grommet	KSAC0002	17
24 .	#8 Small Brass Washer	AN960-B8	17
25 .	#8 Pan Head Machine Screw	MS27039-0809	17

*Builder must fabricate from raw stock.

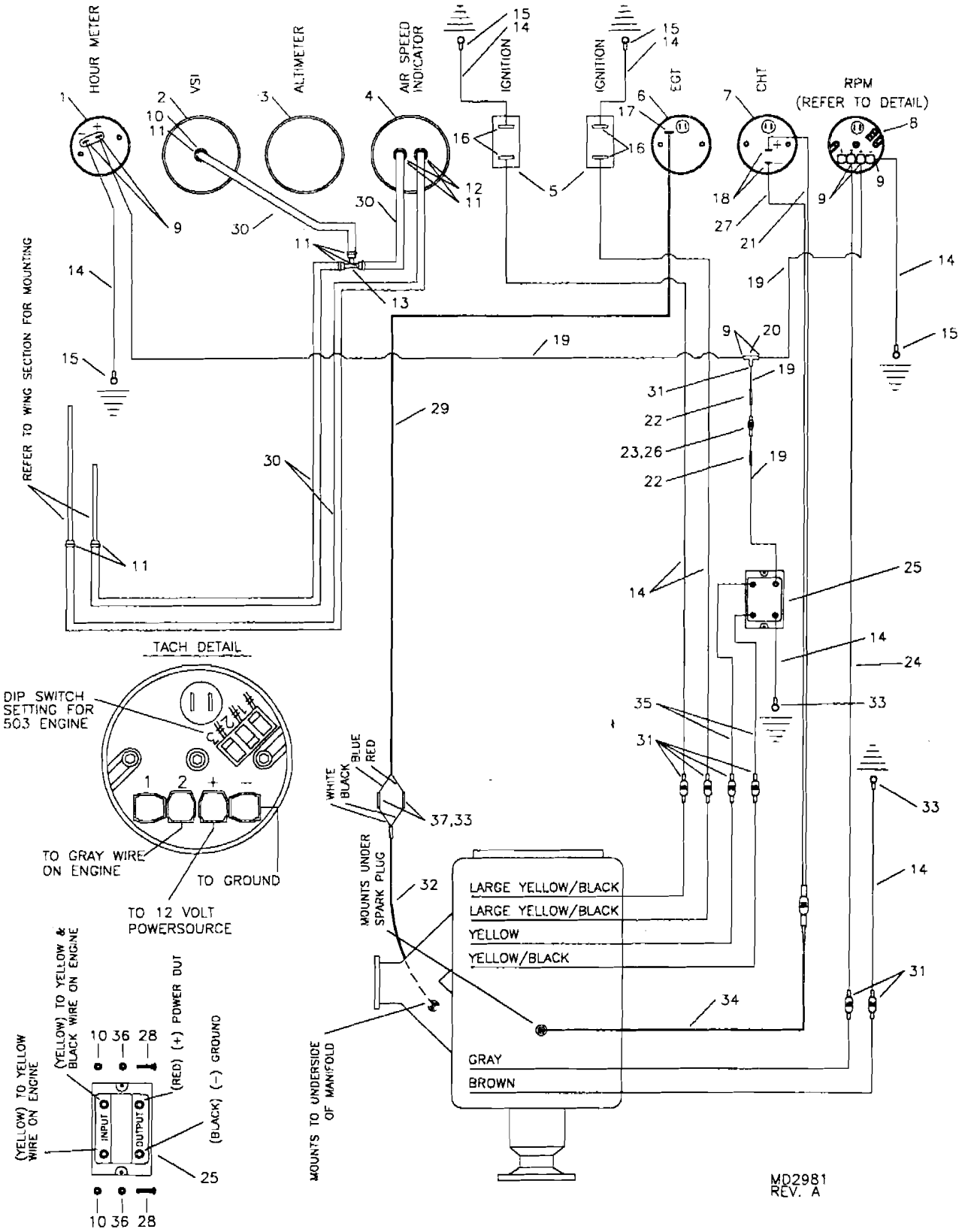

RANS

S-6S COYOTE II 503 INSTRUMENTS AND ELECTRICAL WITHOUT ELECTRIC START

S-6S COYOTE II - 503 INSTRUMENTS & ELECTRICAL - WITHOUT ELECTRIC STAR

NOTE: Gauges may vary, consult directions provided with gauge for wiring diagram.

#	DESCRIPTION	PART NUMBER	QUANTITY
1.	Hour Meter	KSPW0022	1
2.	Vertical Speed Indicator (Feet per Minute) *	KSAV0008	1
2.	Vertical Speed Indicator (Meters per Second) *	KSAV0009	1
3.	Altimeter *	KSAV0001	1
3.	Altimeter with Window *	KSAV0002	1
3.	Altimeter with Millibar - Metric *	KSAV0003	1
4.	Air Speed Indicator, 0-150	KSAV0005	1
5.	Ignition Switch	MS35058-22	2
6.	Exhaust Gas Temperature Gauge *	KSPW0008	1
7.	Cylinder Head Temperature Gauge	KSPW0010	1
7.	Dual Cylinder Head Temperature Gauge *	KSPW0012	1
8.	RPM Gauge	KSPW0028	1
9.	14 Gauge Female Spade Terminal, Blue	IP-7128	7
10.	3/16" Shear Nut	AN364-1032A	2
11.	Line Clamp, 3/8"	FS-LCL 3/8	7
12.	Straight Withdrawal Fitting	8330	2
13.	Line Tee	8338	1
14.	14 Gauge Black Wire	14 GA WIRE/BLACK	20 ft
15.	14 Gauge Eye Terminal, Blue 3/16"	IP-7102	6
16.	14 Gauge Eye Terminal, Blue 5/32"	KSES0003	4
17.	EGT End Plug **	KSPW0008-1	0
18.	Female Terminal ***	KSPW0010-1	0
19.	14 Gauge Red Wire	14 GA WIRE/RED	14 ft
20.	Terminal Y Connector, Brass	IP-YC	1
21.	CHT Wire, Red ***	KSPW0010-2	0
22.	14 Gauge Splice, Butt Connector	IP-7132	2
23.	25 AMP Fuse	KSES0020-25	1
24.	14 Gauge White Wire	14 GA WIRE/WHITE	6 ft
25.	Regulator/Rectifier	KSES0005	1
26.	14 Gauge, In Line Fuse Holder	KSES0019	1
27.	CHT Wire, Black ***	KSPW0010-4	0
28.	Pan Head Phillips Bolt (10-32)	KSHW0006	2
29.	EGT Wires **	KSPW0008-2	0
30.	1/4" Fuel/Pitot/Static Line, Blue	FS-FL	25 ft
31.	14 Gauge Male Spade Terminal, Blue	IP-7126	7
32.	EGT Probe **	KSPW0008-3	0
33.	Shrink Wrap	KSAC0009	1 ft
34.	CHT Probe ***	KSPW0010-3	0
35.	14 Gauge Yellow Wire	14 GA WIRE/YELLOW	6 ft
36.	3/16" Large Washer	AN970-3	2
37.	Female Bullet Terminal	02-09-1103	4

*Optional gauge. **Supplied with EGT. ***Supplied with CHT.

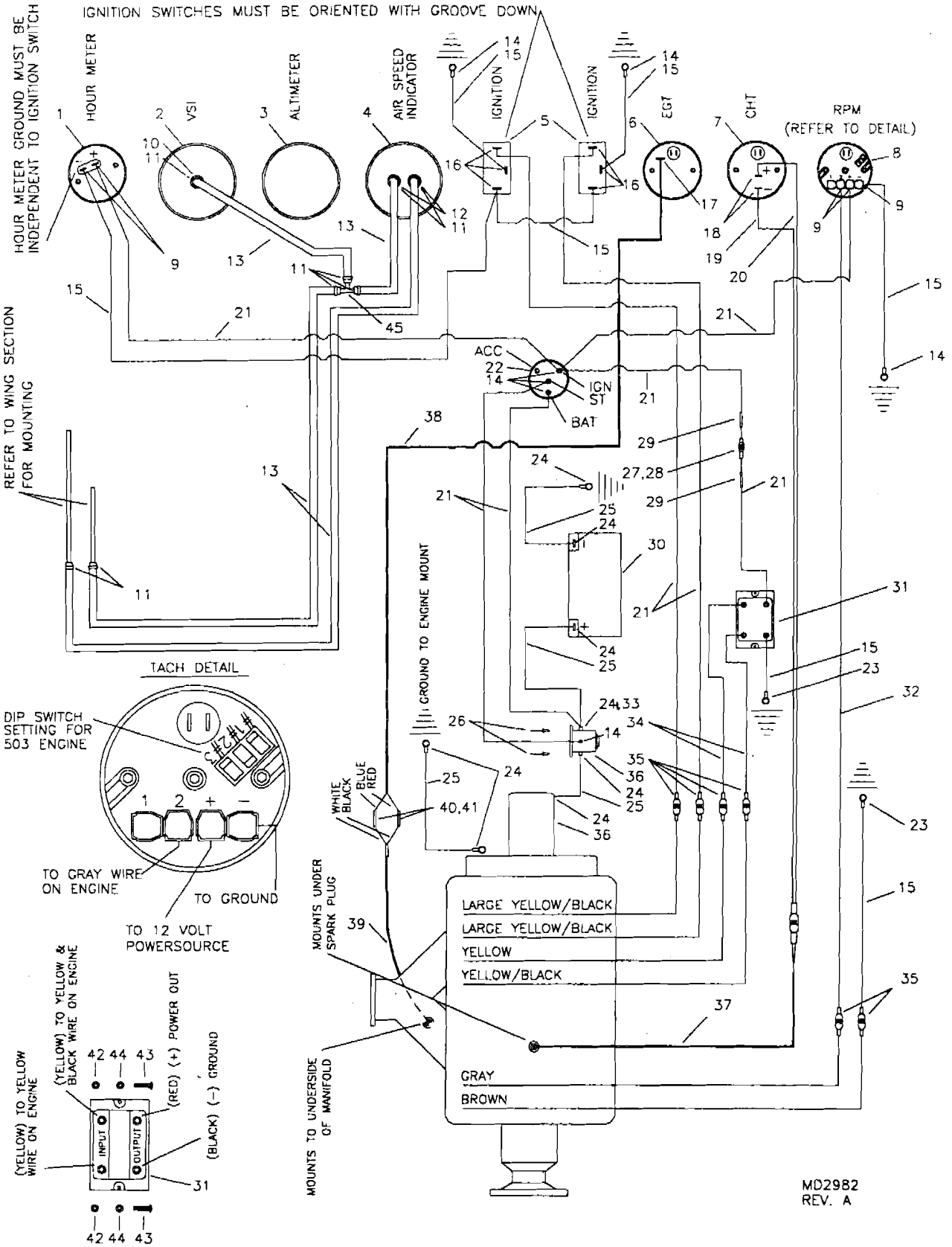

RANS

S-6S COYOTE II
503 INSTRUMENTS AND ELECTRICAL WITH OPTIONAL ELECTRIC START

S-6S COYOTE II - 503 INSTRUMENTS & ELECTRICAL - WITH OPTIONAL ELECTRI

NOTE: Gauges may vary, consult directions provided with gauge for wiring diagram.

#	DESCRIPTION	PART NUMBER	QUANTITY
1.	Hour Meter	KSPW0022	1
2.	Vertical Speed Indicator (Feet per Minute) *	KSAV0008	1
2.	Vertical Speed Indicator (Meters per Second) *	KSAV0009	1
3.	Altimeter *	KSAV0001	1
3.	Altimeter with Window *	KSAV0002	1
3.	Altimeter with Millibar - Metric *	KSAV0003	1
4.	Air Speed Indicator, 0-150	KSAV0005	1
5.	Ignition Switch	MS35058-23	2
6.	Exhaust Gas Temperature Gauge *	KSPW0008	1
7.	Dual Cylinder Head Temperature Gauge *	KSPW0012	1
7.	Cylinder Head Temperature Gauge	KSPW0010	1
8.	RPM Gauge	KSPW0028	1
9.	14 Gauge Female Spade Terminal, Blue	IP-7128	5
10.	90 Withdrawal Fitting	8342	1
11.	Line Clamp, 3/8"	FS-LCL 3/8	8
12.	Straight Withdrawal Fitting	8330	2
13.	1/4" Fuel/Pitot/Static Line, Blue	FS-FL	25 ft
14.	14 Gauge Eye Terminal, Blue 3/16"	IP-7102	7
15.	14 Gauge Black Wire	14 GA WIRE/BLACK	20 ft
16.	14 Gauge Eye Terminal, Blue 5/32"	KSES0003	6
17.	EGT End Plug **	KSPW0008-1	0
18.	Female Terminal ***	KSPW0010-1	0
19.	CHT Wire, Black ***	KSPW0010-4	0
20.	CHT Wire, Red ***	KSPW0010-2	0
21.	14 Gauge Red Wire	14 GA WIRE/RED	18 ft
22.	Key Start Switch	25-6	1
23.	14 Gauge Eye Terminal, Blue 1/4"	1/4 EYE 14 GA	2
24.	4 Gauge Eye Cable Terminal	4 GA CABLE LUG	8
25.	4 Gauge Battery Cable, Black Wire	4 GA WIRE/BLACK	20 ft
26.	3/16" Aluminum Pop Rivet - Cherry Q	AAPQ-64	2
27.	14 Gauge, In Line Fuse Holder	KSES0019	1
28.	25 AMP Fuse	KSES0020-25	1
29.	14 Gauge Splice, Butt Connector	IP-7132	2
30.	Battery ****	PS12150-NB	0
31.	Regulator/Rectifier	KSES0005	1
32.	14 Gauge White Wire	14 GA WIRE/WHITE	7 ft
33.	14 Gauge Eye Terminal, Blue 5/16"	5/16 I TERM	1
34.	14 Gauge Yellow Wire	14 GA WIRE/YELLOW	6 ft
35.	14 Gauge Male Spade Terminal, Blue	IP-7126	6
36.	Electric Starter Kit, 503	MESK-1-503	1
37.	CHT Probe ***	KSPW0010-3	0
38.	EGT Wires **	KSPW0008-2	0
39.	EGT Probe **	KSPW0008-3	0
40.	Female Bullet Terminal	02-09-1103	4
41.	Shrink Wrap	KSAC0009	1 ft
42.	3/16" Shear Nut	AN364-1032A	2
43.	Pan Head Phillips Bolt (10-32)	KSHW0006	2

*Optional gauge. **Supplied with EGT. ***Supplied with CHT.
****Referenced from battery box installation.

NOTE: Gauges may vary, consult directions provided with gauge for wiring diagram.

#	DESCRIPTION	PART NUMBER	QUANTITY
44.	3/16" Large Washer	AN970-3	2
45.	Line Tee	8338	1

*Optional gauge. **Supplied with EGT. ***Supplied with CHT.
****Referenced from battery box installation.

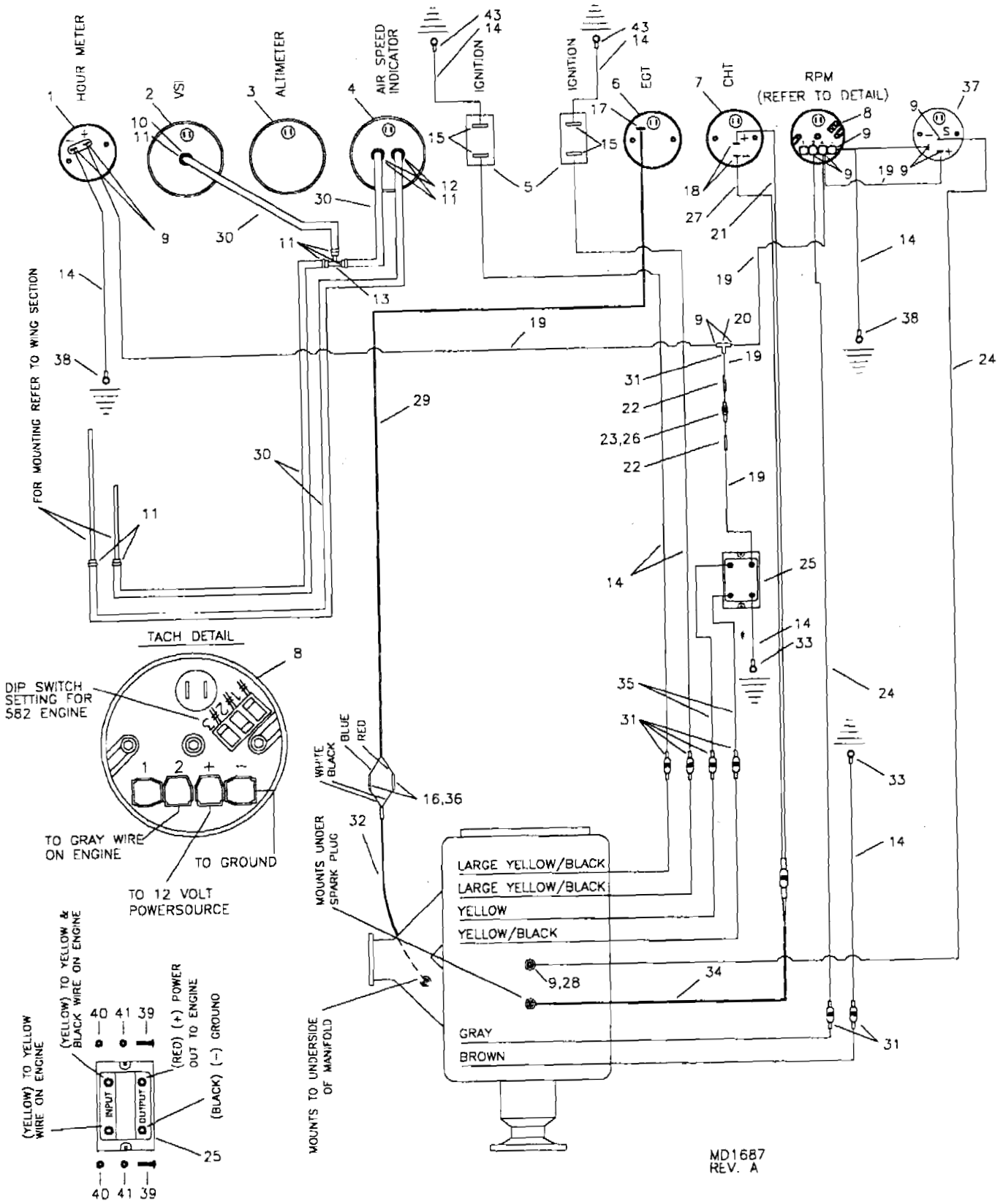

RANS S-6S COYOTE II
582 INSTRUMENTS AND ELECTRICAL WITHOUT ELECTRIC START

S-6S COYOTE II - 582 INSTRUMENTS & ELECTRICAL - WITHOUT ELECTRIC START

NOTE: Gauges may vary, consult directions provided with gauge for wiring diagram.

#	DESCRIPTION	PART NUMBER	QUANTITY
1.	Hour Meter	KSPW0022	1
2.	Vertical Speed Indicator (Feet per Minute) *	KSAV0008	1
2.	Vertical Speed Indicator (Meters per Second) *	KSAV0009	1
3.	Altimeter *	KSAV0001	1
3.	Altimeter with Window *	KSAV0002	1
3.	Altimeter with Millibar - Metric *	KSAV0003	1
4.	Air Speed Indicator, 0-150	KSAV0005	1
5.	Ignition Switch	MS35058-22	2
6.	Exhaust Gas Temperature Gauge	KSPW0008	1
7.	Dual Cylinder Head Temperature Gauge *	KSPW0012	1
7.	Cylinder Head Temperature Gauge *	KSPW0010	1
8.	RPM Gauge	KSPW0028	1
9.	14 Gauge Female Spade Terminal, Blue	IP-7128	11
10.	90 Withdrawal Fitting	8342	1
11.	Line Clamp, 3/8"	FS-LCL 3/8	8
12.	Straight Withdrawal Fitting	8330	2
13.	Line Tee	8338	1
14.	14 Gauge Black Wire	14 GA WIRE/BLACK	20 ft
15.	14 Gauge Eye Terminal, Blue 5/32"	KSES0003	4
16.	Female Bullet Terminal	02-09-1103	4
17.	EGT End Plug **	KSPW0008-1	0
18.	Female Terminal ***	KSPW0010-1	0
19.	14 Gauge Red Wire	14 GA WIRE/RED	18 ft
20.	Terminal Y Connector, Brass	IP-YC	1
21.	CHT Wire, Red ***	KSPW0010-2	0
22.	14 Gauge Splice, Butt Connector	IP-7132	2
23.	25 AMP Fuse	KSES0020-25	1
24.	14 Gauge White Wire	14 GA WIRE/WHITE	12 ft
25.	Regulator/Rectifier	KSES0005	1
26.	14 Gauge, In Line Fuse Holder	KSES0019	1
27.	CHT Wire, Black ***	KSPW0010-4	0
28.	Coolant Temperature Probe *****	KSPW0016-1	0
29.	EGT Wires **	KSPW0008-2	0
30.	1/4" Fuel/Pitot/Static Line, Blue	FS-FL	25 ft
31.	14 Gauge Male Spade Terminal, Blue	IP-7126	7
32.	EGT Probe **	KSPW0008-3	0
33.	14 Gauge Eye Terminal, Blue 1/4"	1/4 EYE 14 GA	2
34.	CHT Probe ***	KSPW0010-3	0
35.	14 Gauge Yellow Wire	14 GA WIRE/YELLOW	6 ft
36.	Shrink Wrap	KSAC0009	1 ft
37.	Coolant Temperature Gauge	KSPW0016	1
38.	14 Gauge Eye Terminal, Blue 3/16"	IP-7102	4
39.	Pan Head Phillips Bolt (10-32)	KSHW0006	2
40.	3/16" Shear Nut	AN364-1032A	2
41.	3/16" Large Washer	AN970-3	2

*Optional gauge. **Supplied with EGT. ***Supplied with CHT.
****Referenced from cooling system. *****Supplied with coolant temperature gauge.

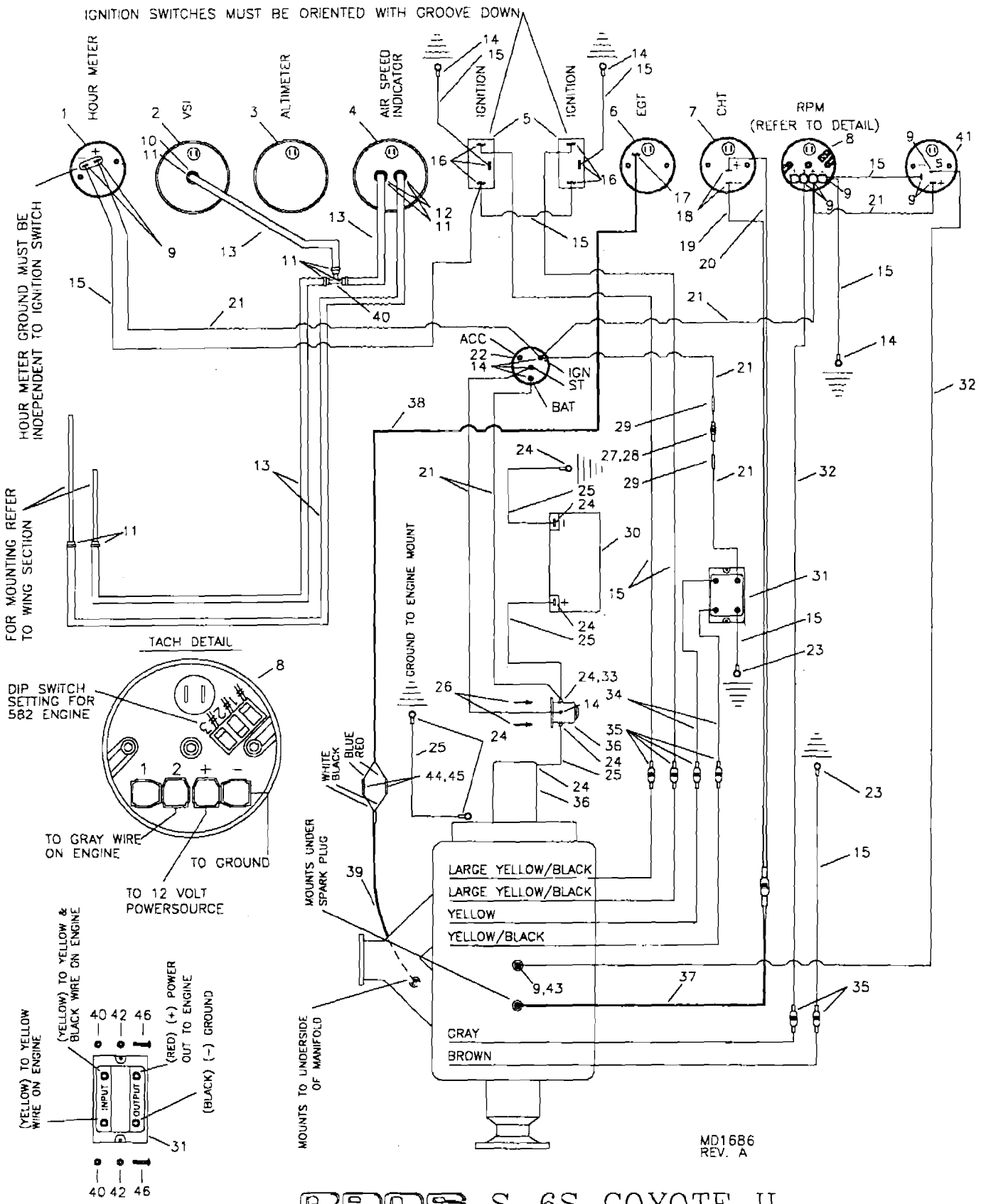

RANS S-6S COYOTE II
582 INSTRUMENTS AND ELECTRICAL WITH OPTIONAL ELECTRIC START

S-6S COYOTE II - 582 INSTRUMENTS & ELECTRICAL - WITH OPTIONAL ELECTRIC START

NOTE: Gauges may vary, consult directions provided with gauge for wiring diagram.

#	DESCRIPTION	PART NUMBER	QUANTITY
1.	Hour Meter	KSPW0022	1
2.	Vertical Speed Indicator (Feet per Minute) *	KSAV0008	1
2.	Vertical Speed Indicator (Meters per Second) *	KSAV0009	1
3.	Altimeter *	KSAV0001	1
3.	Altimeter with Window *	KSAV0002	1
3.	Altimeter with Millibar - Metric *	KSAV0003	1
4.	Air Speed Indicator, 0-150	KSAV0005	1
5.	Ignition Switch	MS35058-23	2
6.	Exhaust Gas Temperature Gauge	KSPW0008	1
7.	Cylinder Head Temperature Gauge *	KSPW0010	1
7.	Dual Cylinder Head Temperature Gauge *	KSPW0012	1
8.	RPM Gauge	KSPW0028	1
9.	14 Gauge Female Spade Terminal, Blue	IP-7128	9
10.	90 Withdrawal Fitting	8342	1
11.	Line Clamp, 3/8"	FS-LCL 3/8	8
12.	Straight Withdrawal Fitting	8330	2
13.	1/4" Fuel/Pitot/Static Line, Blue	FS-FL	25 ft
14.	14 Gauge Eye Terminal, Blue 3/16"	IP-7102	7
15.	14 Gauge Black Wire	14 GA WIRE/BLACK	20 ft
16.	14 Gauge Eye Terminal, Blue 5/32"	KSES0003	6
17.	EGT End Plug **	KSPW0008-1	0
18.	Female Terminal ***	KSPW0010-1	0
19.	CHT Wire, Black ***	KSPW0010-4	0
20.	CHT Wire, Red ***	KSPW0010-2	0
21.	14 Gauge Red Wire	14 GA WIRE/RED	18 ft
22.	Key Start Switch	25-6	1
23.	14 Gauge Eye Terminal, Blue 1/4"	1/4 EYE 14 GA	2
24.	4 Gauge Eye Cable Terminal	4 GA CABLE LUG	8
25.	4 Gauge Battery Cable, Black Wire	4 GA WIRE/BLACK	20 ft
26.	3/16" Aluminum Pop Rivet - Cherry Q	AAPQ-64	2
27.	14 Gauge, In Line Fuse Holder	KSES0019	1
28.	25 AMP Fuse	KSES0020-25	1
29.	14 Gauge Splice, Butt Connector	IP-7132	2
30.	Battery ****	PS12150-NB	0
31.	Regulator/Rectifier	KSES0005	1
32.	14 Gauge White Wire	14 GA WIRE/WHITE	13 ft
33.	14 Gauge Eye Terminal, Blue 5/16"	5/16 I TERM	1
34.	14 Gauge Yellow Wire	14 GA WIRE/YELLOW	6 ft
35.	14 Gauge Male Spade Terminal, Blue	IP-7126	6
36.	Electric Starter Kit, 582	MESK-3-582	1
37.	CHT Probe ***	KSPW0010-3	0
38.	EGT Wires **	KSPW0008-2	0
39.	EGT Probe **	KSPW0008-3	0
40.	3/16" Shear Nut	AN364-1032A	2
41.	Coolant Temperature Gauge	KSPW0016	1
42.	3/16" Large Washer	AN970-3	2
43.	Coolant Temperature Probe *****	KSPW0016-1	0
44.	Female Bullet Terminal	02-09-1103	4

*Optional gauge. **Supplied with EGT. ***Supplied with CHT.
****Referenced from battery box installation.
*****Supplied with coolant temperature gauge.

S-6S COYOTE II - 582 INSTRUMENTS & ELECTRICAL -WITH OPTIONAL ELECTRIC START-cont

NOTE: Gauges may vary, consult directions provided with gauge for wiring diagram.

#	DESCRIPTION	PART NUMBER	QUANTITY
45.	Shrink Wrap	KSAC0009	1 ft
46.	Pan Head Phillips Bolt (10-32)	KSHW0006	2

*Optional gauge. **Supplied with EGT. ***Supplied with CHT.
****Referenced from battery box installation.
*****Supplied with coolant temperature gauge.

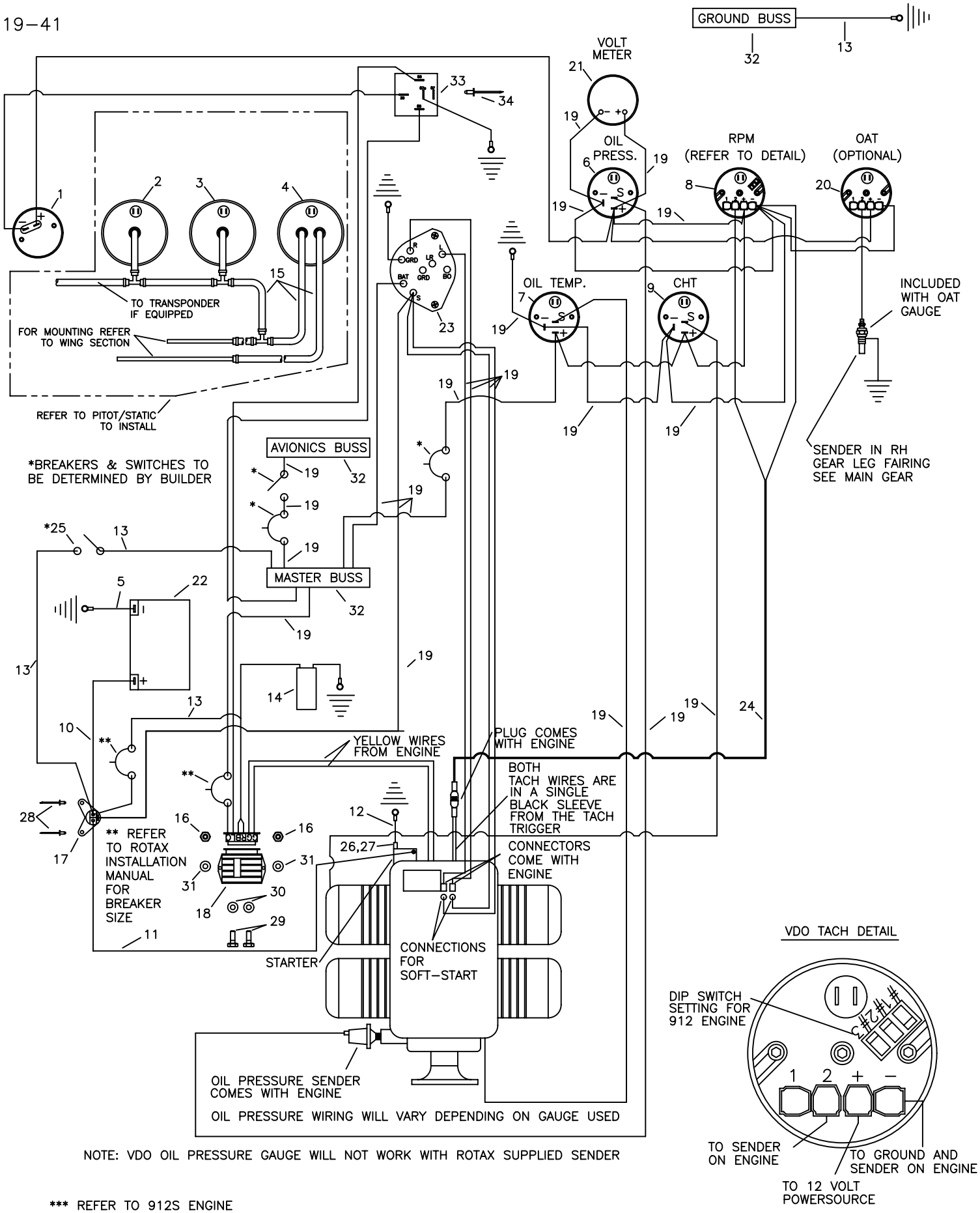

NOTE: VDO OIL PRESSURE GAUGE WILL NOT WORK WITH ROTAX SUPPLIED SENDER

*** REFER TO 912S ENGINE

RANS S-6S COYOTE II
INSTRUMENTS AND ELECTRICAL

S-6S COYOTE II - SPORT WING - 912/912S INSTRUMENTS AND ELECTRICAL

NOTE: Gauges may vary, consult directions provided with gauge for wiring diagram.

#	DESCRIPTION	PART NUMBER	QUANTITY
1 .	Hour Meter - VDO *	KSPW0022	0
2 .	Vertical Speed Indicator (Feet per Minute) *	KSAV0008	0
2 .	Vertical Speed Indicat (Meters per Second) *	KSAV0009	0
3 .	Altimeter with Millibar - Metric *	KSAV0003	0
3 .	Altimeter with Window *	KSAV0002	0
3 .	Altimeter *	KSAV0001	0
4 .	Air Speed Indicator *	KSAV0019	0
5 .	Battery / Ground Cable	KAES0012	1
6 .	Oil Pressure Gauge *	-----	0
7 .	Oil Temperature Gauge - VDO * **	KSPW0017	0
8 .	RPM Gauge - VDO *	KSPW0028	0
9 .	Cylinder Head Temperature Gauge - VDO * **	KSPW0017	0
10 .	Battery / Solenoid Cable	KAES0013	1
11 .	Solenoid / Starter Cable	KAES0014	1
12 .	Starter / Ground Cable	KAES0015	1
13 .	12 Gauge Wire *	-----	0
14 .	Capacitor - 22,000 microFarad / 25v *	-----	0
15 .	1/4" Blue Hose	FS-FL	25 ft
16 .	3/16" Shear Nut	AN364-1032A	2
17 .	Solenoid ****	-----	0
18 .	Regulator/Rectifier ****	-----	0
19 .	14 Gauge Wire *	-----	0
20 .	Outside Air Temperature Gauge Kit - VDO *	KSIP0009	0
21 .	Voltmeter - VDO *	KSES0009	0
22 .	Battery ***	-----	0
23 .	Ignition Switch	KSES0027	1
24 .	2 Plex 20 Gauge Wire *	-----	0
25 .	Master Switch *	-----	0
26 .	1/4" Bolt	AN4-10A	1
27 .	1/4" Steel Shear Nut	AN364-428C	1
28 .	3/16" Aluminum Rivet - Cherry Q	AAPQ-64	2
29 .	3/16" Bolt	AN3-5A	2
30 .	3/16" Thin Washer	AN960-10L	2
31 .	3/16" Large Washer	AN970-3	2
32 .	Buss Bar *	AMW 636	0
33 .	Hour Meter Relay Assembly ***** ******	KAES0016	0
34 .	1/8" Stainless Steel Rivet - Cherry Q ***** ******	CCPQ-41	0

*Optional or builder supplied. **Oil Temperature & CHT use the same type of gauge.
***Referenced from 912 battery box installation. ****Supplied with Engine.
***** May be purchased seperately, call RANS Parts dept. for pricing
****** Required if installing Analog Instruments - Not required with most Digital Systems

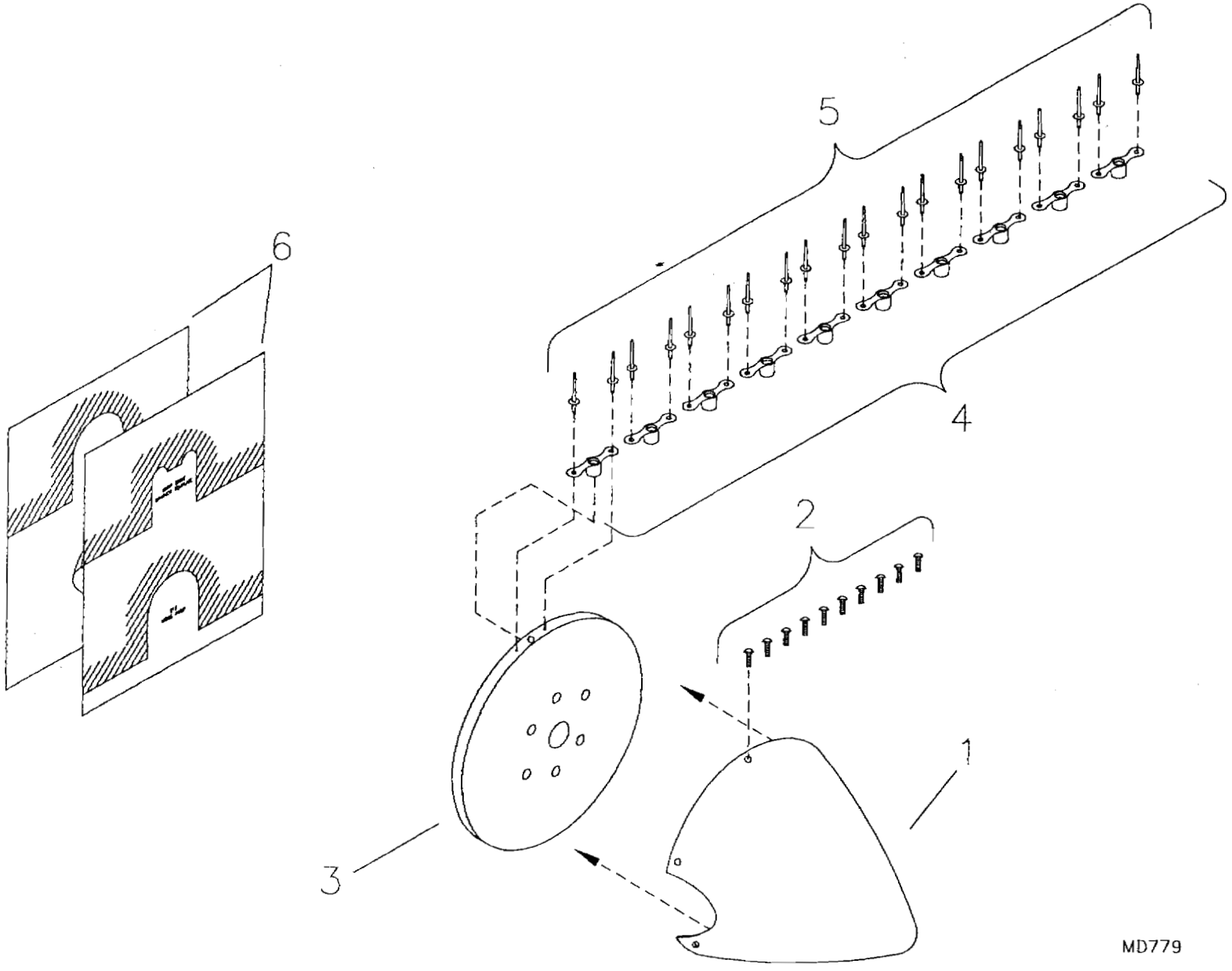

RANS S-6S COYOTE II
12" SPINNER

S-6S COYOTE II - OPTIONAL 12" SPINNER

#	DESCRIPTION	PART NUMBER	QUANTITY
1.	Spinner Dome, 12"	SPIN-12	1
2.	Pan Head Phillips Bolt (5/8" long)	KSHW0071	10
3.	Spinner Backing Plate, 12" - 912/912S (-1 582)	KPPW0042	1
3.	Spinner Backing Plate, 12" (-1 912)	SPIN-BC12-582	1
4.	3/16" Nut Plate	K-1000-3	10
5.	3/32" Aluminum Pop Rivet	40APR1/4	20
6.	Spinner Template	SPN-TEMP	1

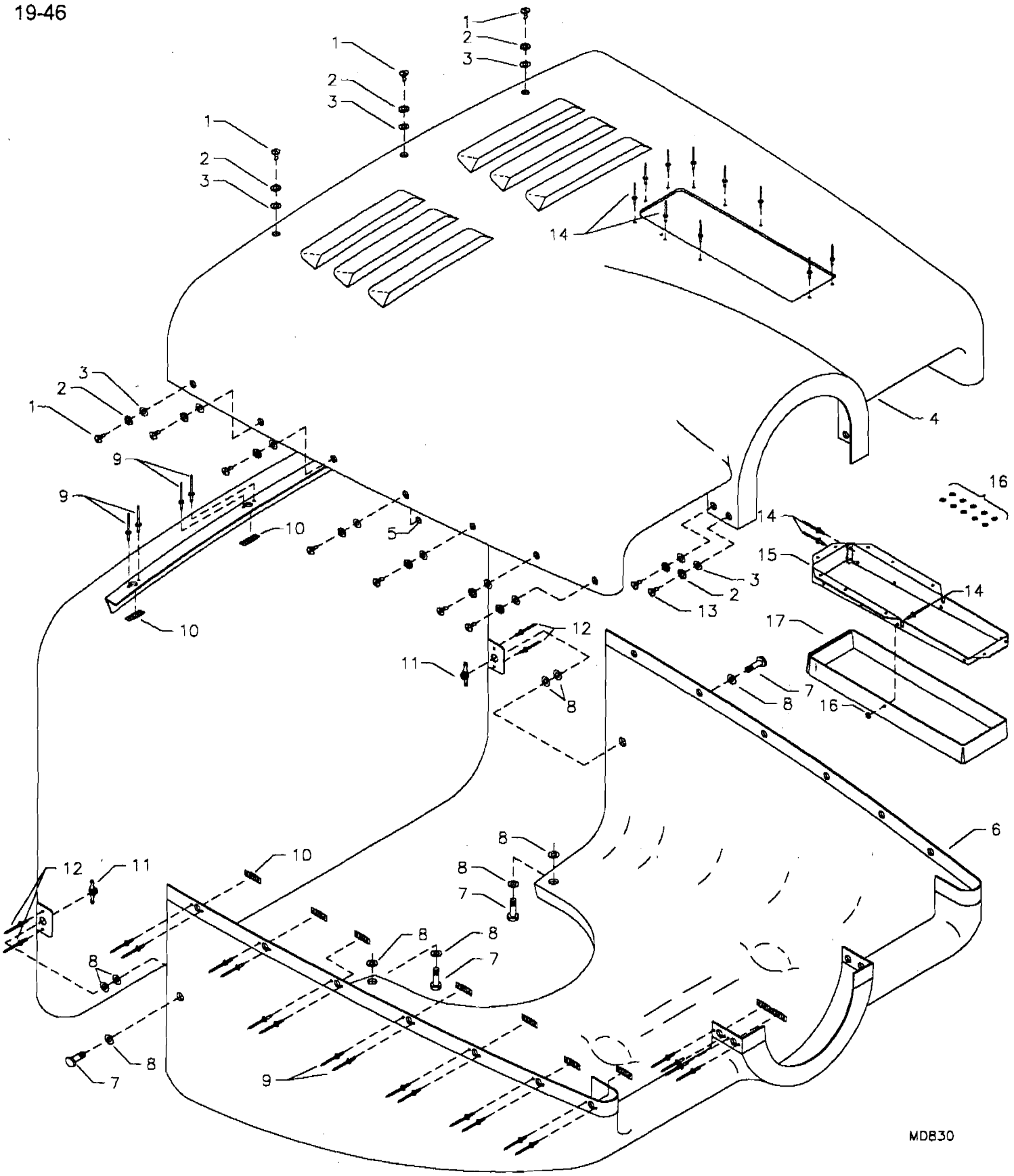

RANS S-6S COYOTE II
COWLING ASSEMBLY 503

S-6S COYOTE II - 503 COWLING ASSEMBLY

#	DESCRIPTION	PART NUMBER	QUANTITY
1.	1/4 Turn Stud, 503	#180	19
2.	Rubber Washer	#201	23
3.	Wear Washer Nylon	#103	23
4.	S-6S Cowling Top, 503/912/912S	KPCW0038	1
5.	Snap Ring	#101	19
6.	S-6S Cowling Bottom, 503/582/912	KPCW0037	1
7.	3/16" Bolt	AN3-4A	4
8.	3/16" Plastic Washer	PW-3	10
9.	3/32" Aluminum Pop Rivet	40APR1/4	46
10.	1/4 Turn Receptacle	#302	23
11.	3/16" Nut Plate	K-1000-3	2
12.	3/32" Aluminum Pop Rivet	40APR1/8	4
13.	1/4 Turn Stud	#200	4
14.	1/8" Aluminum Pop Rivet - Cherry Q	AAPQ-42	22
15.	Exhaust Duct - Cowl	KPCW0016	1
16.	1/8" Small Brass Washer	AN960-B4	12
17.	Exhaust Duct Seal	KPCW0019	1
18.	Rubber Flap Retainer Strip	1/2X020	1

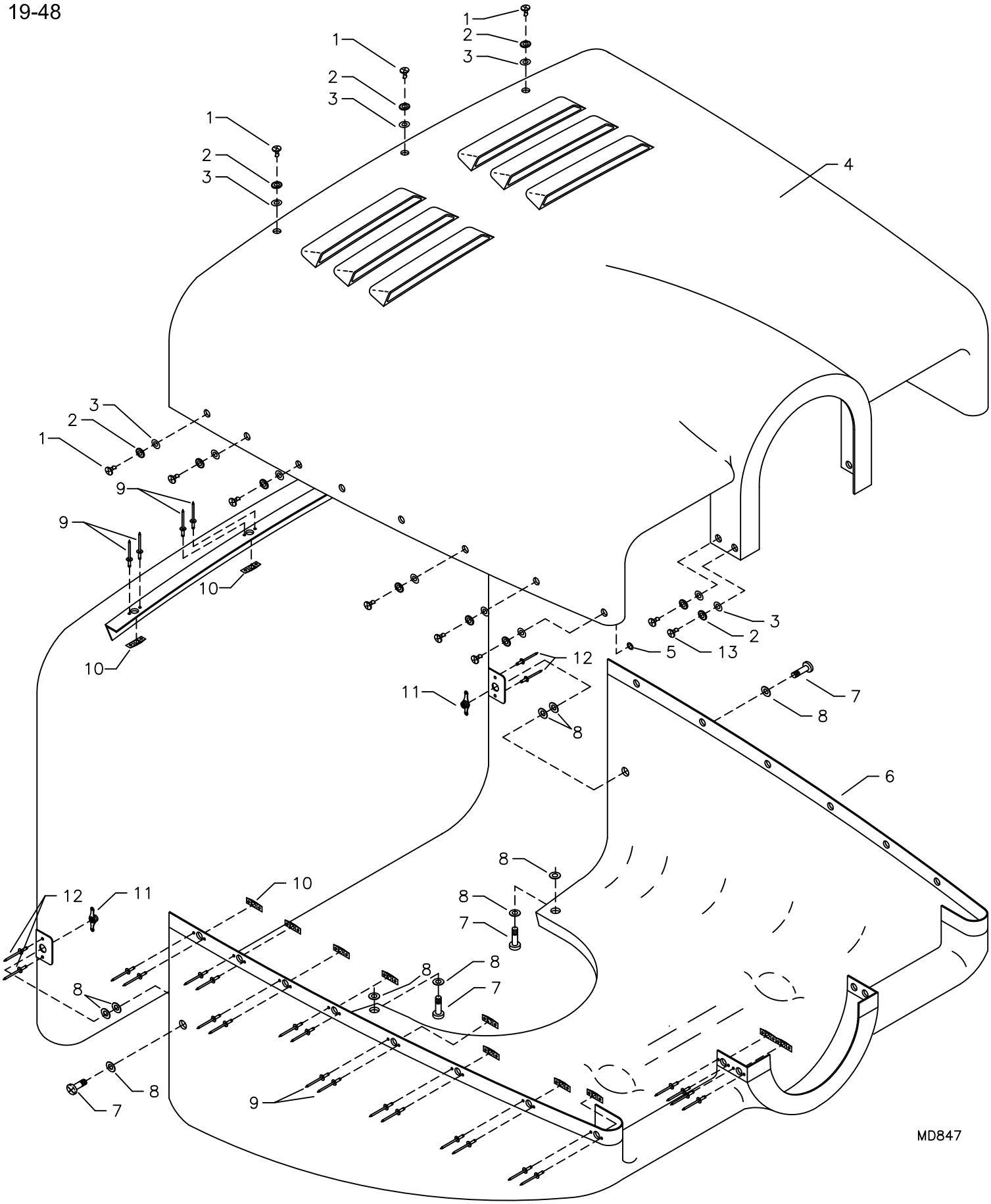

RANS S-6S COYOTE II
COWLING ASSEMBLY - 582

S-6S COYOTE II - 582 COWLING ASSEMBLY

#	DESCRIPTION	PART NUMBER	QUANTITY
1 .	1/4 Turn Stud, 582	#180	19
2 .	Rubber Washer, 582	#201	23
3 .	Wear Washer Nylon, 582	#103	23
4 .	S-6S Cowling Top, 503/582	KPCW0038	1
5 .	Snap Ring, 582	#101	19
6 .	S-6S Cowling Bottom, 503/582	KPCW0037	1
7 .	3/16" Truss Head Bolt	AN526-C1032R12	4
8 .	3/16" Plastic Washer	PW-3	10
9 .	3/32" Aluminum Pop Rivet, 582	40APR1/4	46
10 .	1/4 Turn Receptacle, 582	#302	23
11 .	3/16" Nut Plate	K-1000-3	2
12 .	3/32" Aluminum Pop Rivet	40APR1/8	4
13 .	1/4 Turn Stud	#200	4

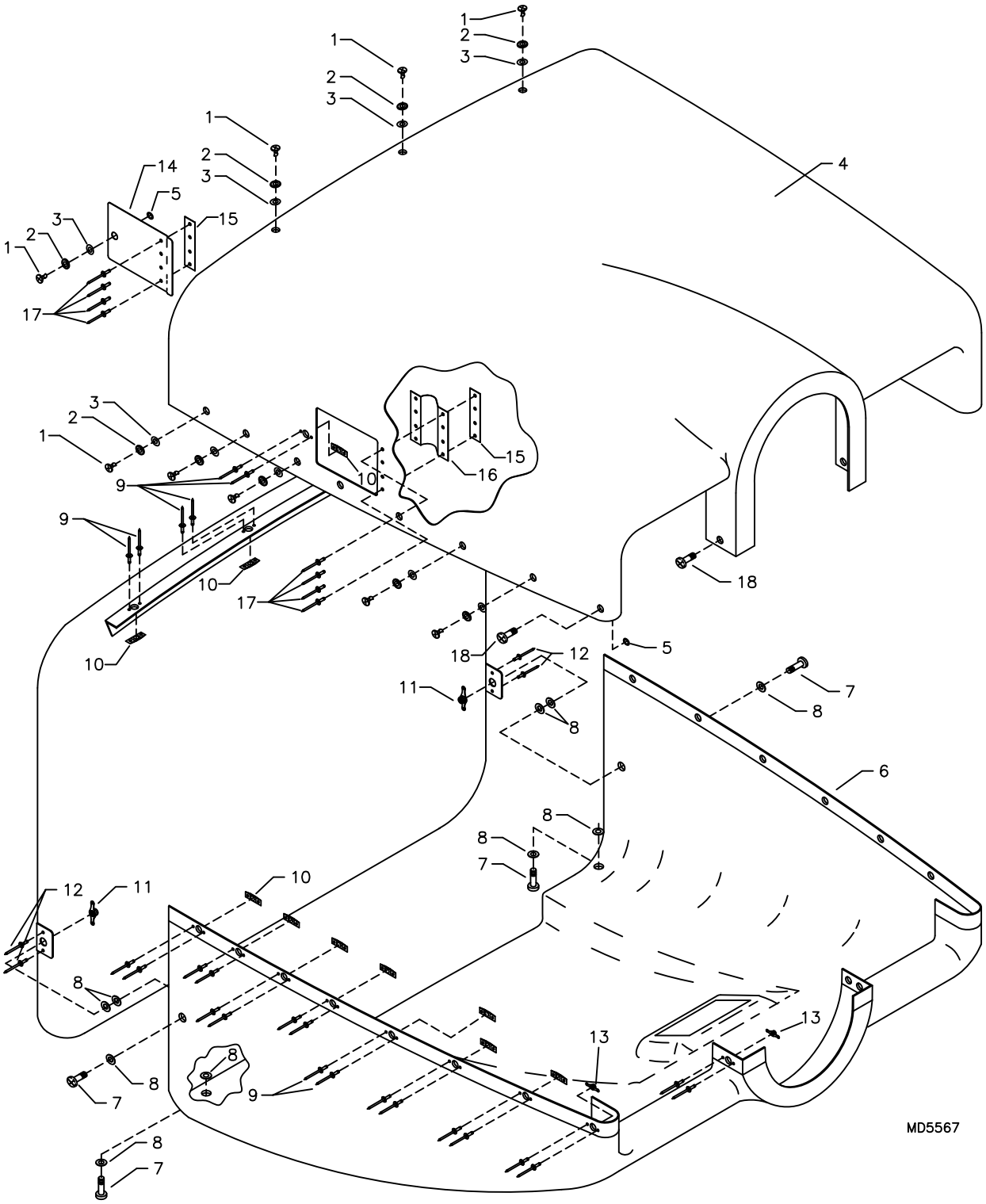

RANS S-6S COYOTE II COWLING ASSEMBLY - 912

S-6S COYOTE II - 912/912S COWLING ASSEMBLY

#	DESCRIPTION	PART NUMBER	QUANTITY
1 .	1/4 Turn Stud, 912/912S	#180	18
2 .	Rubber Washer, 912/912S	#201	18
3 .	Wear Washer Nylon, 912/912S	#103	18
4 .	S-6S Cowling - Upper - Fiberglass - 912	KPCW0043-F	1
4 .	S-6S Cowling - Upper - Optional - Carbon Fiber - 912	KPCW0043-C	1
5 .	Snap Ring, 912/912S	#101	18
6 .	S-6S Cowling - Lower - Fiberglass - 912	KPCW0042-F	1
6 .	S-6S Cowling - Lower - Optional - Carbon Fiber - 912	KPCW0042-C	1
7 .	3/16" Truss Head Bolt	AN526-C1032R12	4
8 .	3/16" Plastic Washer	PW-3	10
9 .	3/32" Aluminum Pop Rivet	40APR1/4	44
10 .	1/4 Turn Receptacle	#302	18
11 .	3/16" Nut Plate	K-1000-3	2
12 .	3/32" Aluminum Pop Rivet	40APR1/8	4
13 .	8-32 Nut Plate	MS21047-08	4
14 .	Oil Tank Access Door	KPCW0025	1
15 .	Oil Tank Access Door - Raw Stock Kit	KAAC0039	1
15 .	Aluminum Strip, 3/4" x .020 x 7" *	KAAC0039-1	0
16 .	Vinyl Fabric, 2 1/2" x 3 1/2"	KAAC0039-2	0
17 .	1/8" Aluminum Rivet - Avex	1691-0410	8
18 .	#8 Truss Head Screw	AN515-8R7	4

*Raw Stock, cut into 2 pieces.

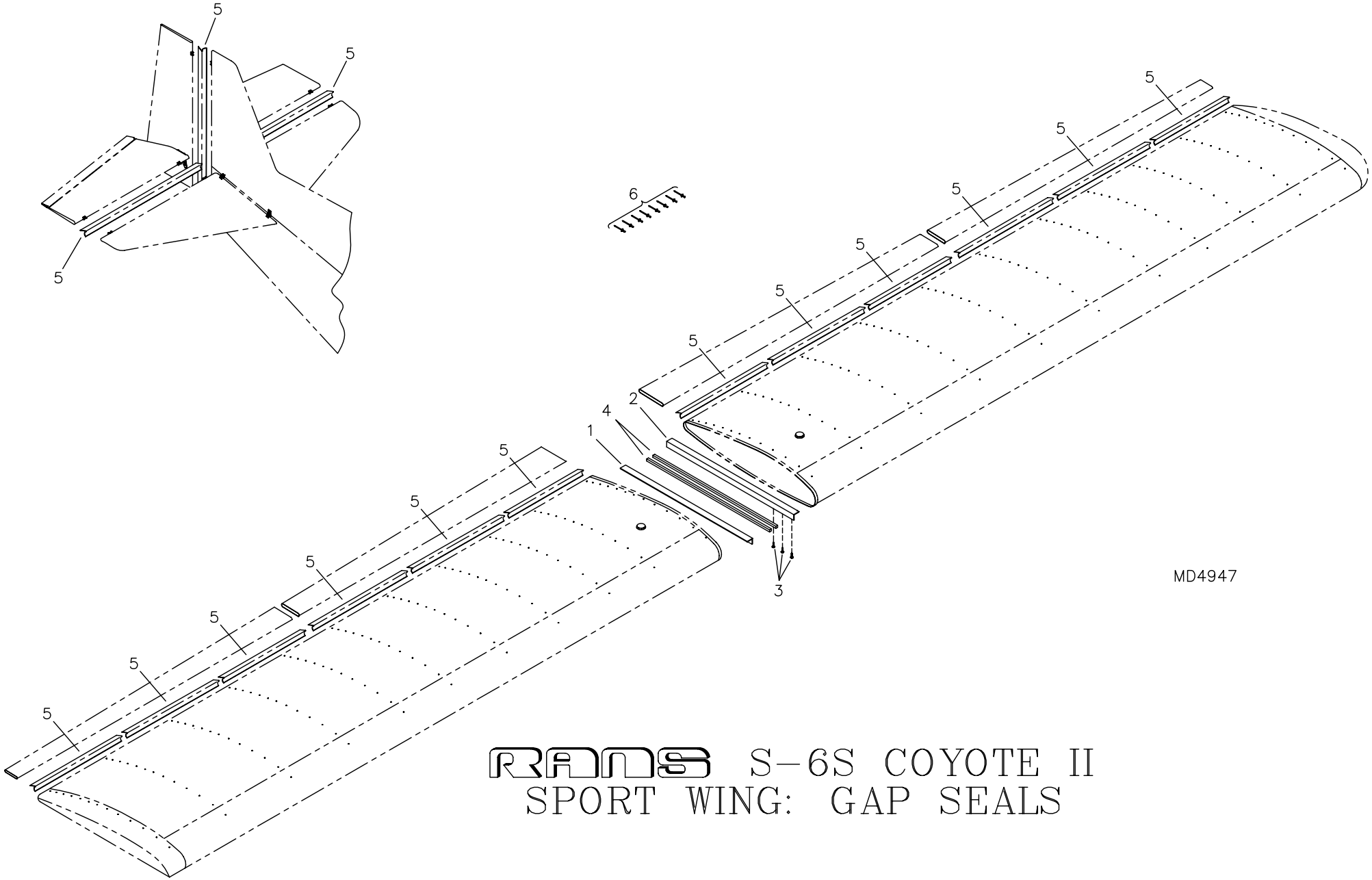

RANS S-6S COYOTE II
SPORT WING: GAP SEALS

S-6S COYOTE II - SPORT WING: GAP SEALS

#	DESCRIPTION	PART NUMBER	QUANTITY
1.	Bottom Wing Root Seal, LH	KPWI0012-L	1
2.	Bottom Wing Root Seal, RH	KPWI0012-R	1
3.	#8 Pan Head Screw	8X1/2 PHS	16
4.	Foam Rubber Strip, 3/8" x 3/16"	WS-FS	2 rls
5.	Gap Seal	GAP-2	42 ft
6.	1/8" Aluminum Pop Rivet - Cherry Q	AAPQ-44	52

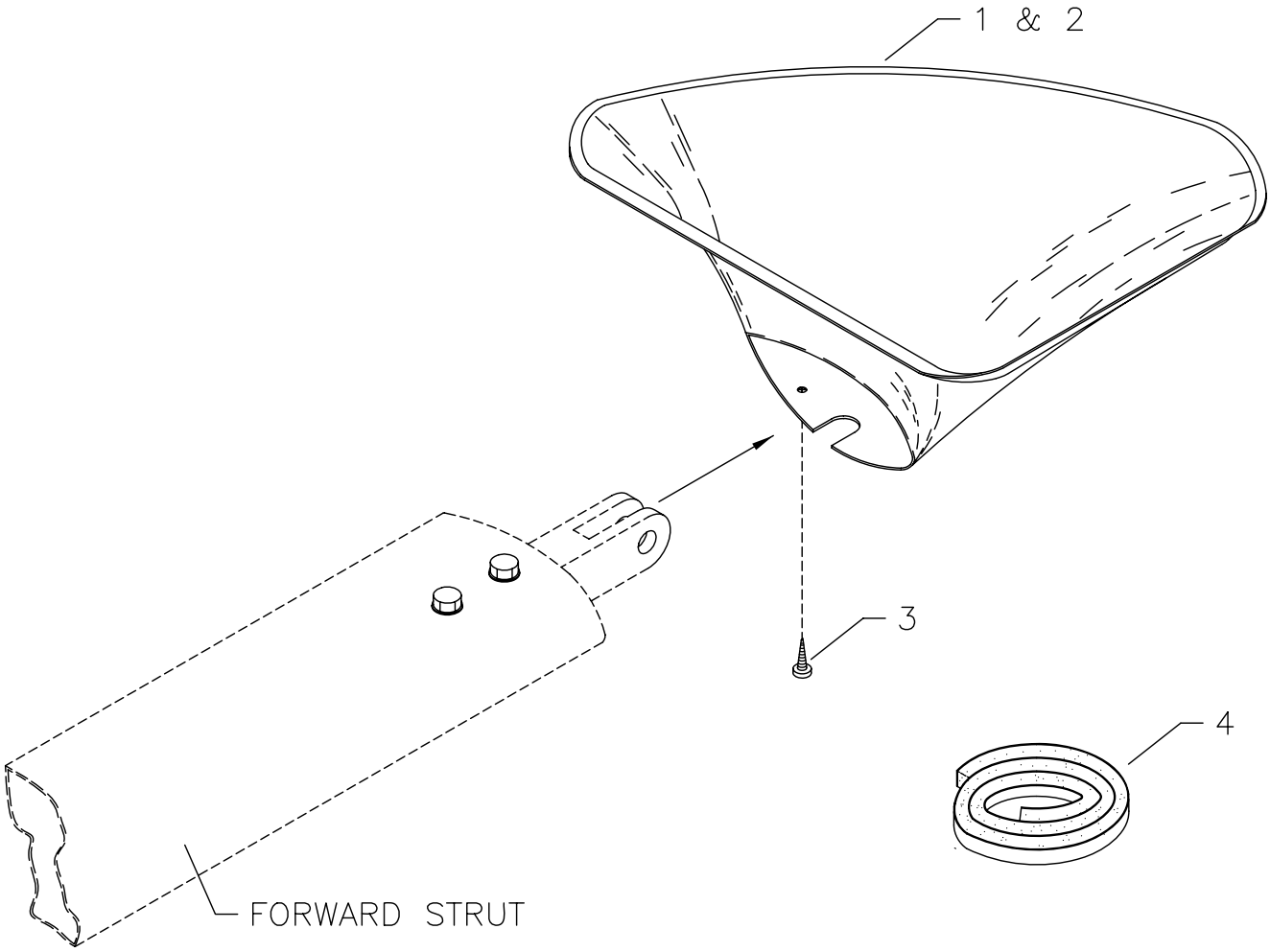

NOTE: LEFT SIDE SHOWN

MD314

RANS S-6S COYOTE II SPORT WING: FORWARD STRUT FILLET FAIRING

S-6S COYOTE II - FORWARD STRUT FILLET FAIRING

#	DESCRIPTION	PART NUMBER	QUANTITY
1.	Forward Strut Fairing	W-FSFF-RH	1
2.	Forward Strut Fairing	W-FSFF-LH	1
3.	#6 Small Pan Head Screw	6RX1/2 PHS	2
4.	High Density Foam Tape, 1/8" x 1/4" x 40"	1/8-FS	1 rls

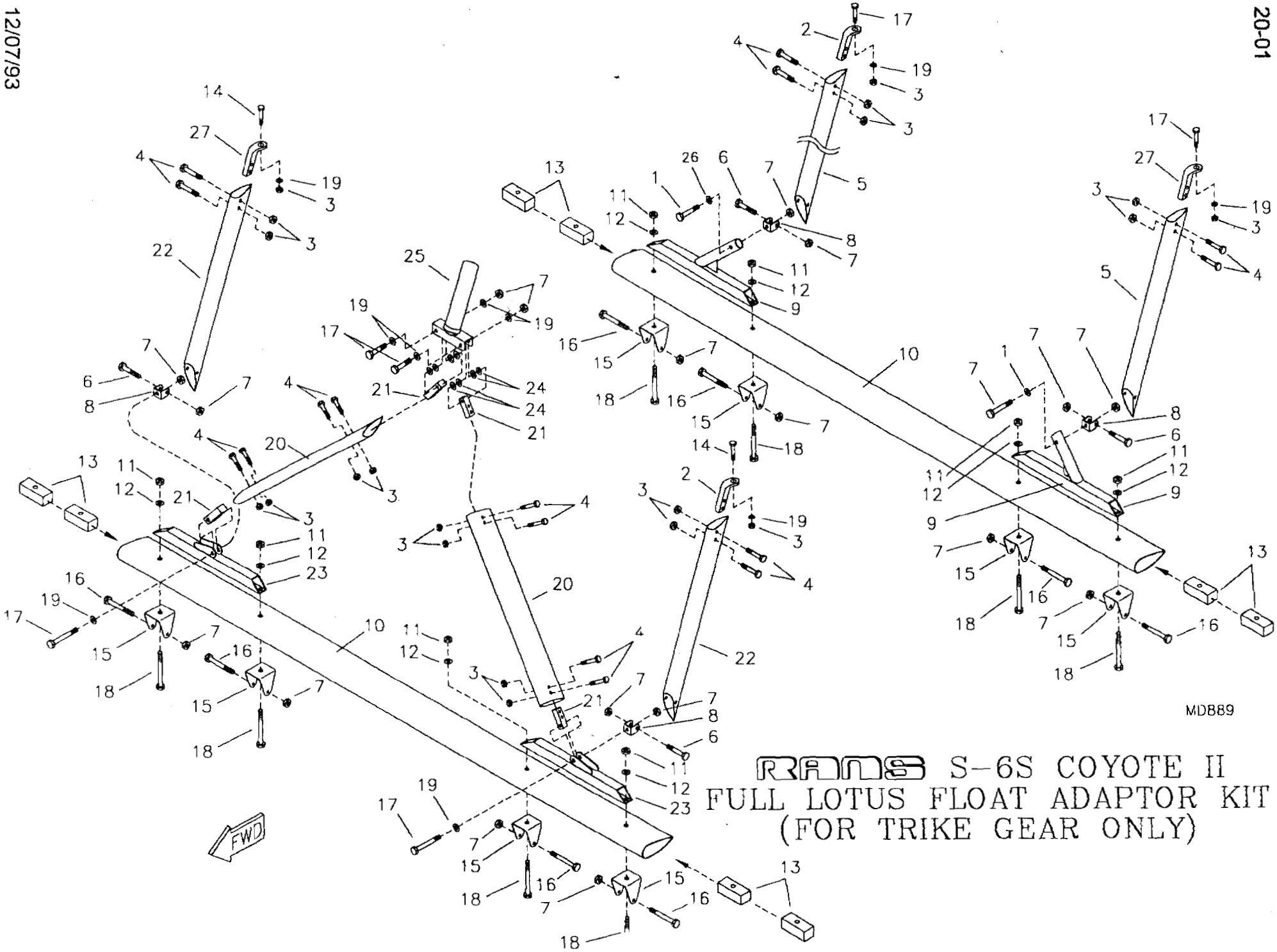

RANS S-6S COYOTE II
FULL LOTUS FLOAT ADAPTOR KIT
(FOR TRIKE GEAR ONLY)

S-6S COYOTE II - OPTIONAL FULL LOTUS FLOAT KIT

#	DESCRIPTION	PART NUMBER	QUANTITY
1.	1/4" Bolt	AN4-17A	2
2.	Upper AFT Fitting, RH	FLT-UAF-R	2
3.	3/16" Shear Nut	AN364-1032A	16
4.	3/16" Bolt	AN3-12A	16
5.	AFT Side Brace	FLT-ASB(6)	2
6.	1/4" Bolt	AN4-15A	4
7.	1/4" Shear Nut	AN364-428A	16
8.	Horizontal Stabilizer Attach Bracket	S2-SAB	4
9.	Main Gear Attach	FLT-MGA	2
10.	Cross Beam	FLT-CB(6)	2
11.	5/16" Tensile Nut	AN365-524A	8
12.	5/16" Thick Washer	AN960-516	8
13.	1" x 1" PVC Block	FLT-1X1PVC	8
14.	3/16" Bolt	AN3-5A	2
15.	U Bracket, 1 5/8"	SU-158	8
16.	1/4" Bolt	AN4-24A	8
17.	1/4" Bolt	AN4-15A	6
18.	5/16" Bolt	AN5-20A	8
19.	3/16" Thick Washer	AN960-10	8
20.	Forward A Beam Brace	FLT-FABB(6)	2
21.	Forward Brace End Fitting	FLT-ENDFT	4
22.	Forward Side Brace	FLT-FSB(6)	2
23.	Forward Cross Beam Attach Fitting	FLT-FCBAF'	2
24.	1/4" Plastic Washer	PW-4	8
25.	Nose Gear Mount	FLT-NGMT	1
26.	1/4" Thin Washer	AN960-416L	2
27.	Upper AFT Fitting, LH	FLT-UAF-L	2

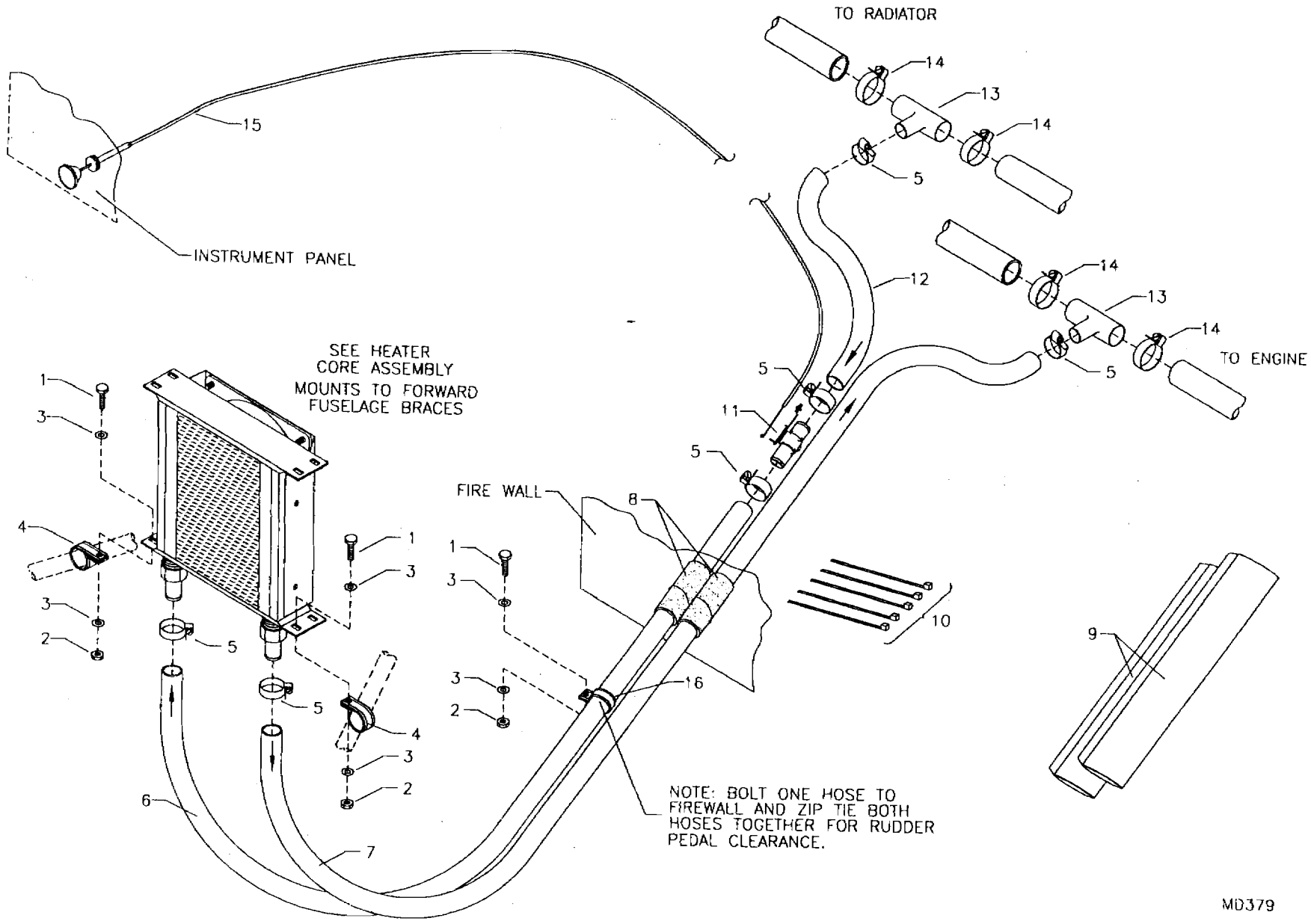

RANS S-6S/S-6XL COYOTE II
HEATER SYSTEM

S-6S COYOTE II - OPTIONAL HEATER SYSTEM ASSEMBLY

#	DESCRIPTION	PART NUMBER	QUANTITY
1.	3/16" Bolt	AN3-4A	3
2.	3/16" Shear Nut	AN364-1032A	3
3.	3/16" Thin Washer	AN960-10L	6
4.	1/2" Cushioned Tube Clamp	MS21919-DG8	2
5.	Hose Clamp, 1"	5-5210	6
6.	5/8" Heater Hose	HEATER HOSE 5/8	21 in
7.	5/8" Heater Hose	HEATER HOSE 5/8	24 in
8.	1" Radiator Hose, 2 @ 4"	RADIATOR HOSE	8 in
9.	Hose Cover	H-HC	2
10.	Zip Ties	ZIP TIES	5
11.	Control Valve	277813	1
12.	5/8" Heater Hose	HEATER HOSE 5/8	18 in
13.	1" To 5/8" Tee	H-TEE	2
14.	Hose Clamp, 1 1/2"	5-5216	4
15.	Push Pull Choke Cable	4-336	1
16.	1" Cushioned Tube Clamp	MS21919-DG16	1

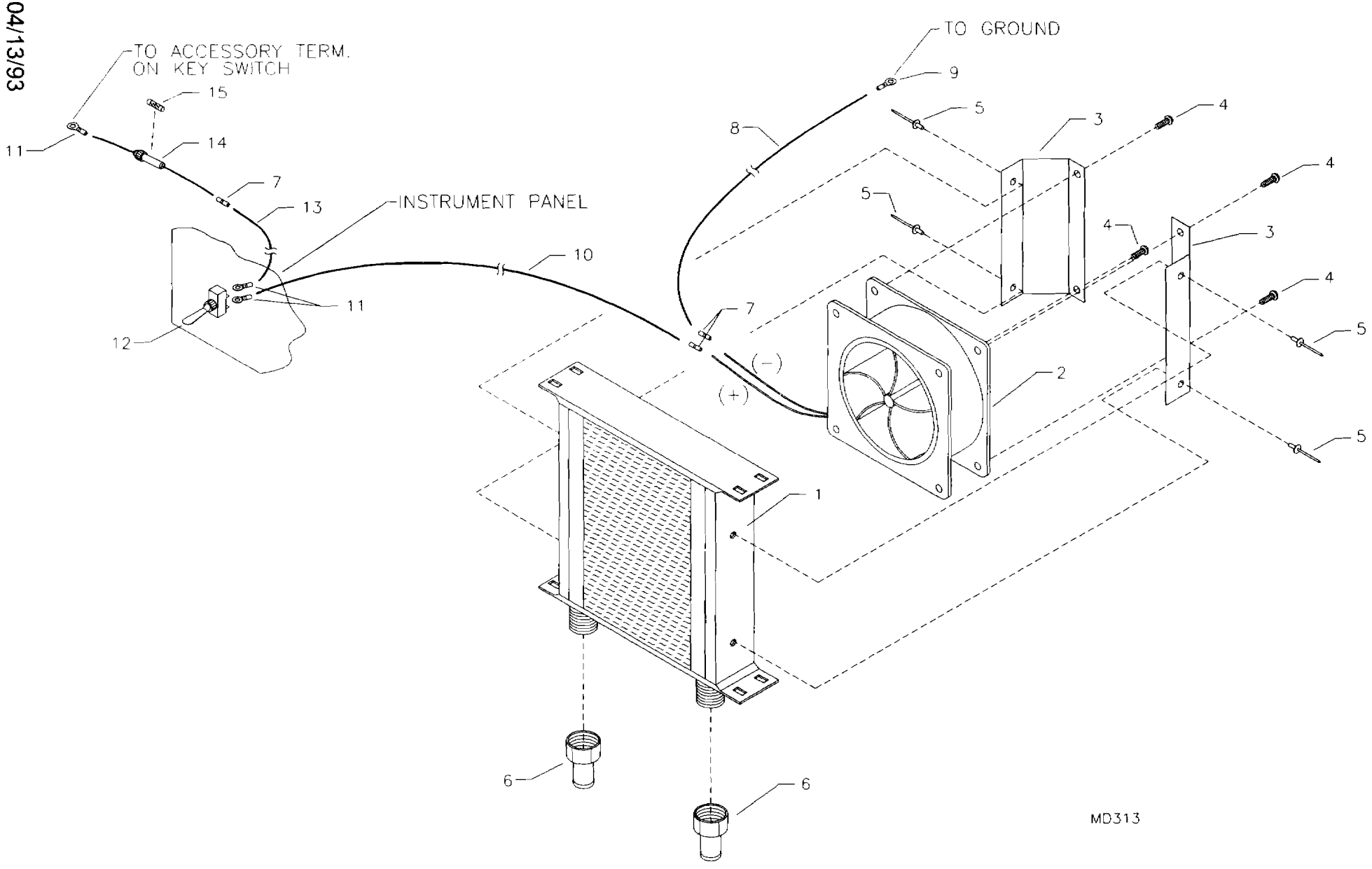

RAMS S-6S COYOTE II
HEATER CORE ASSEMBLY

S-6S COYOTE II - OPTIONAL 582/912/912S HEATER CORE ASSEMBLY

#	DESCRIPTION	PART NUMBER	QUANTITY
1.	Heater Core	21608	1
2.	Fan	032207	1
3.	Fan Mounting Plate	H-HFMP	2
4.	3/16" Truss Head Bolt	AN526-C1032R12	4
5.	1/8" Aluminum Pop Rivet - Cherry Q	AAPQ-42	4
6.	5/8" Nipple	80146	2
7.	14 Gauge Splice, Butt Connector	IP-7132	3
8.	14 Gauge Black Wire	14 GA WIRE/BLACK	2 ft
9.	14 Gauge Eye Terminal, Blue 1/4"	1/4 EYE 14 GA	1
10.	14 Gauge Red Wire	14 GA WIRE/RED	3.5 ft
11.	14 Gauge Eye Terminal, Blue 3/16"	IP-7102	3
12.	Ignition Switch	MS35058-22	1
13.	14 Gauge Red Wire	14 GA WIRE/RED	2.5 ft
14.	14 Gauge, In Line Fuse Holder	KSES0019	1
15.	10 AMP Fuse	KSES0020-10	1

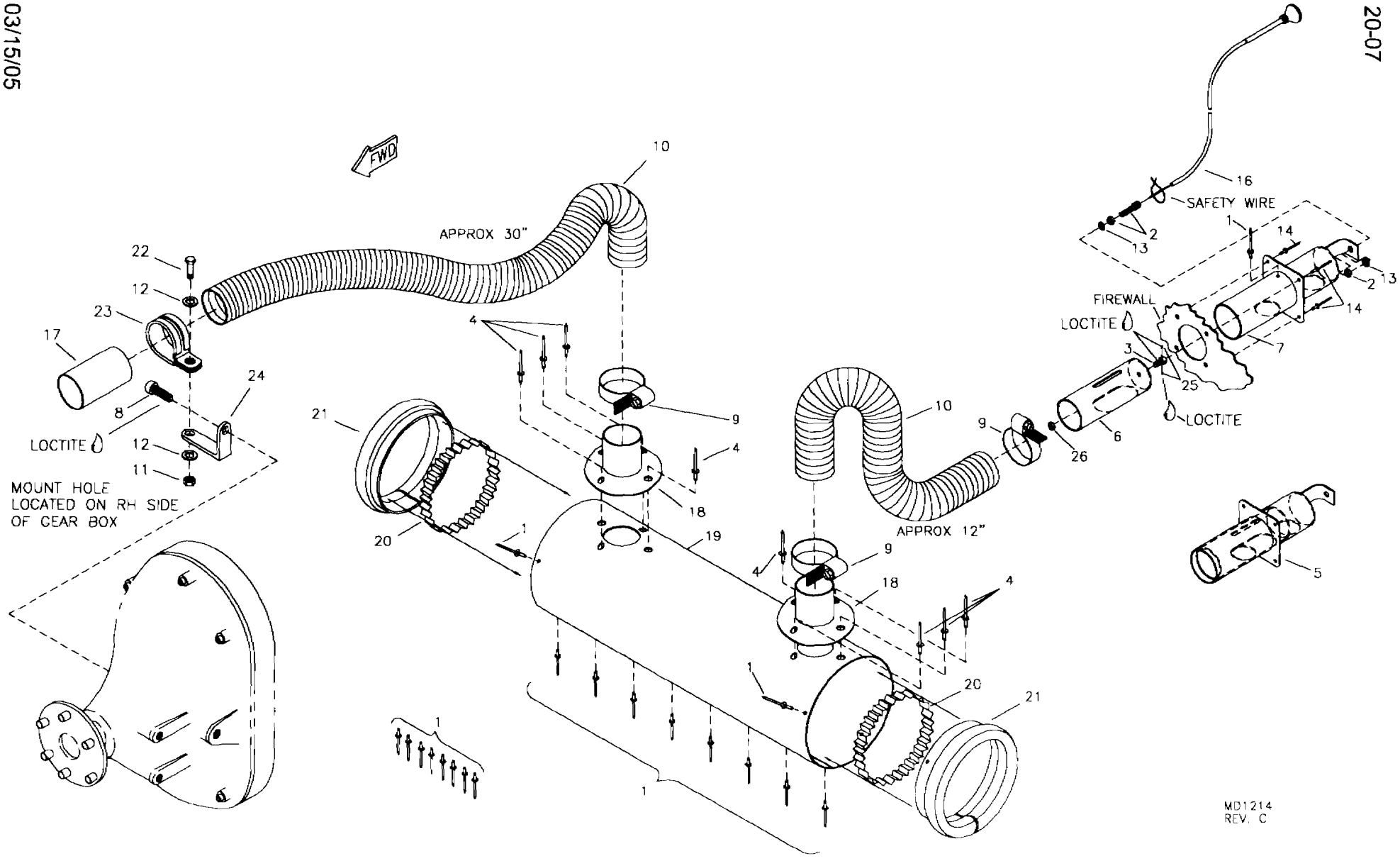

RANS S-6S COYOTE II
OPTIONAL 912 MUFFLER HEATER ASSEMBLY

S-6S COYOTE II - OPTIONAL 912/912S MUFFLER HEATER ASSEMBLY

#	DESCRIPTION	PART NUMBER	QUANTITY
1.	1/8" Aluminum Pop Rivet - Cherry Q	AAPQ-42	26
2.	Adjustable Cable Ferrule	12553	1
3.	Reverse Cable Stop	BPHW0006	1
4.	3/16" Aluminum Pop Rivet - Cherry Q	AAPQ-62	8
5.	Air Diverter Assembly	KASY0006	1
6.	Air Diverter - Slide *	KASY0006-1	0
7.	Air Diverter Body *	KASY0006-2	0
8.	10MM Bolt	M10X20	1
9.	Hose Clamp, 1 3/4"	5-5220	3
10.	1 1/2" Heater Duct/Creet Hose	CREET HOSE	5 ft
11.	3/16" Shear Nut	AN364-1032A	1
12.	3/16" Thin Washer	AN960-10L	2
13.	1/4" Plastic Washer	PW-4	2
14.	3/16" Aluminum Pop Rivet - Cherry Q	AAPQ-64	4
15.	3/16" Bolt	AN3-4A	1
16.	Control Cable	48701-0-96	1
17.	Inlet Tube	KPSY0053	1
18.	Inlet Manifold	KPSY0030	2
19.	S6 912 Heater Wrap	KPSY0013	1
20.	Muffler Wrap Stand Off	KPSY0017	2
21.	Fiberglass Rope	8815K162	4 ft
22.	3/16" Bolt	AN3-5A	1
23.	Cushioned Tube Clamp	MS21919-DG24	1
24.	Angle Bracket	KPSY0016	1
25.	Set Screw	KSHW0043	2
26.	6MM Hex Nut	6MM HEX NUT	1

*Componant of KASY0006.

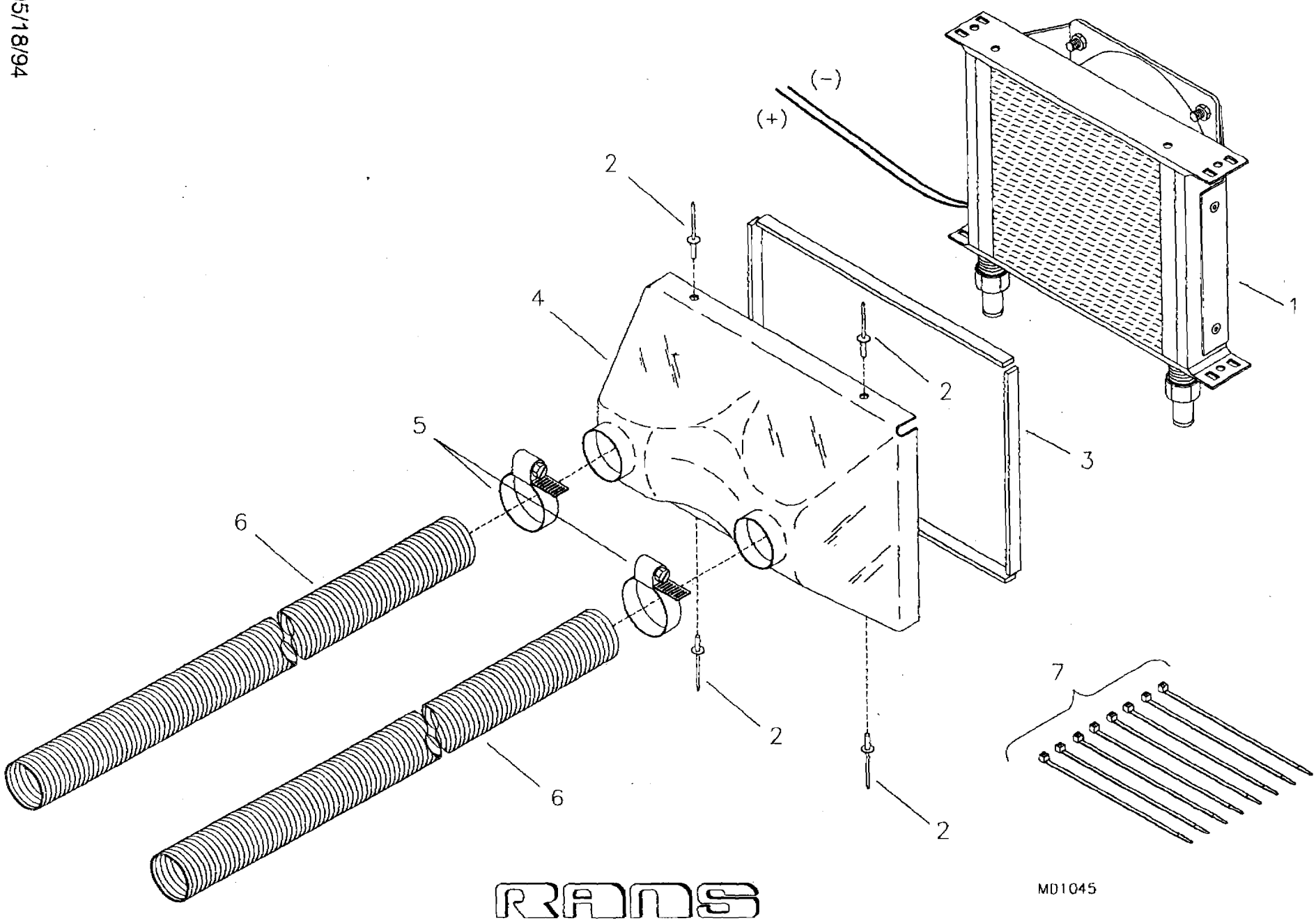

RAMS

HEATER CORE ASSEMBLY WITH OPTIONAL SHROUD

S-6S COYOTE II - OPTIONAL 912/912S HEATER CORE ASSEMBLY

(WITH OPTIONAL SHROUD)

#	DESCRIPTION	PART NUMBER	QUANTITY
1.	Heater Core	21608	1
2.	3/32" Aluminum Pop Rivet	40APR1/8	4
3.	Foam Strip, 1/8" x 1/4"	FS-1/8X1/4	2 ft
4.	Heater Shroud	KPSY0008	1
5.	Hose Clamp, 1 3/4"	5-5220	2
6.	1 1/2" Heater Duct/Creet Hose	CREET HOSE	10 ft
7.	Zip Ties	ZIP TIES	8

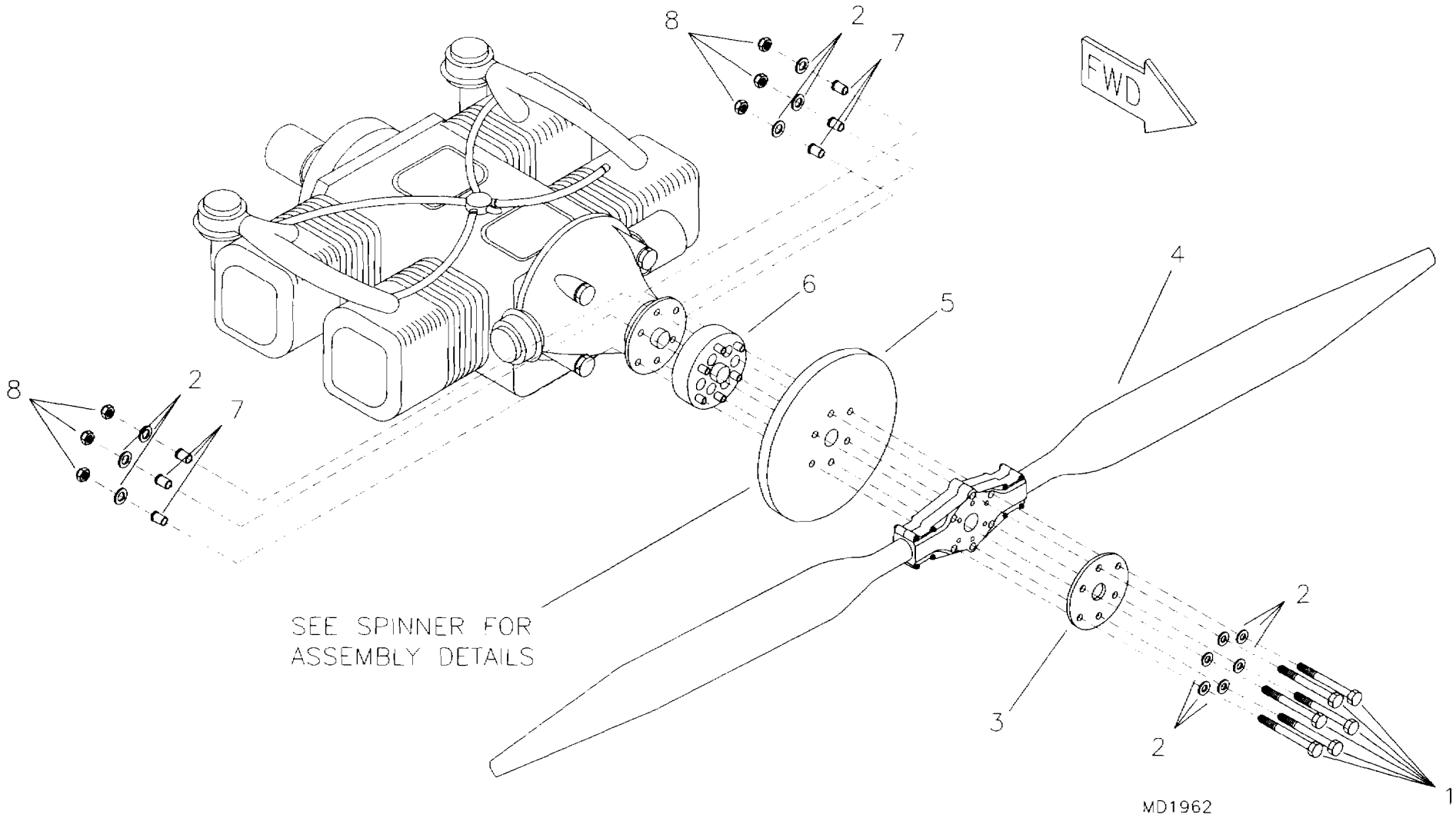

RANS S-6S COYOTE II
912 OPTIONAL WARP DRIVE PROPELLER ASSEMBLY

S-6S COYOTE II - OPTIONAL 912/912S WARP DRIVE PROPELLER ASSEMBLY

#	DESCRIPTION	PART NUMBER	QUANTITY
1.	5/16" Bolt	AN5-43A	6
2.	5/16" Thick Washer	AN960-516	12
3.	Crush Plate *	EG-CRUSH-PLATE-912	0
4.	3-Blade Warp Drive Propeller, 912S	KSPW0005-S	1
4.	2-Blade Warp Drive Propeller, 912	KSPW0005	1
5.	Spinner Backing Plate, 12" - 912/912S **	KPPW0042	0
6.	1" Prop Extension Assembly	KAPW0012	1
7.	Flange Bushing - 912	KPPW0038	6
8.	5/16" Tensile Steel Loc Nut	AN365-524C	6

*Supplied with engine.
**Referenced from Spinner.

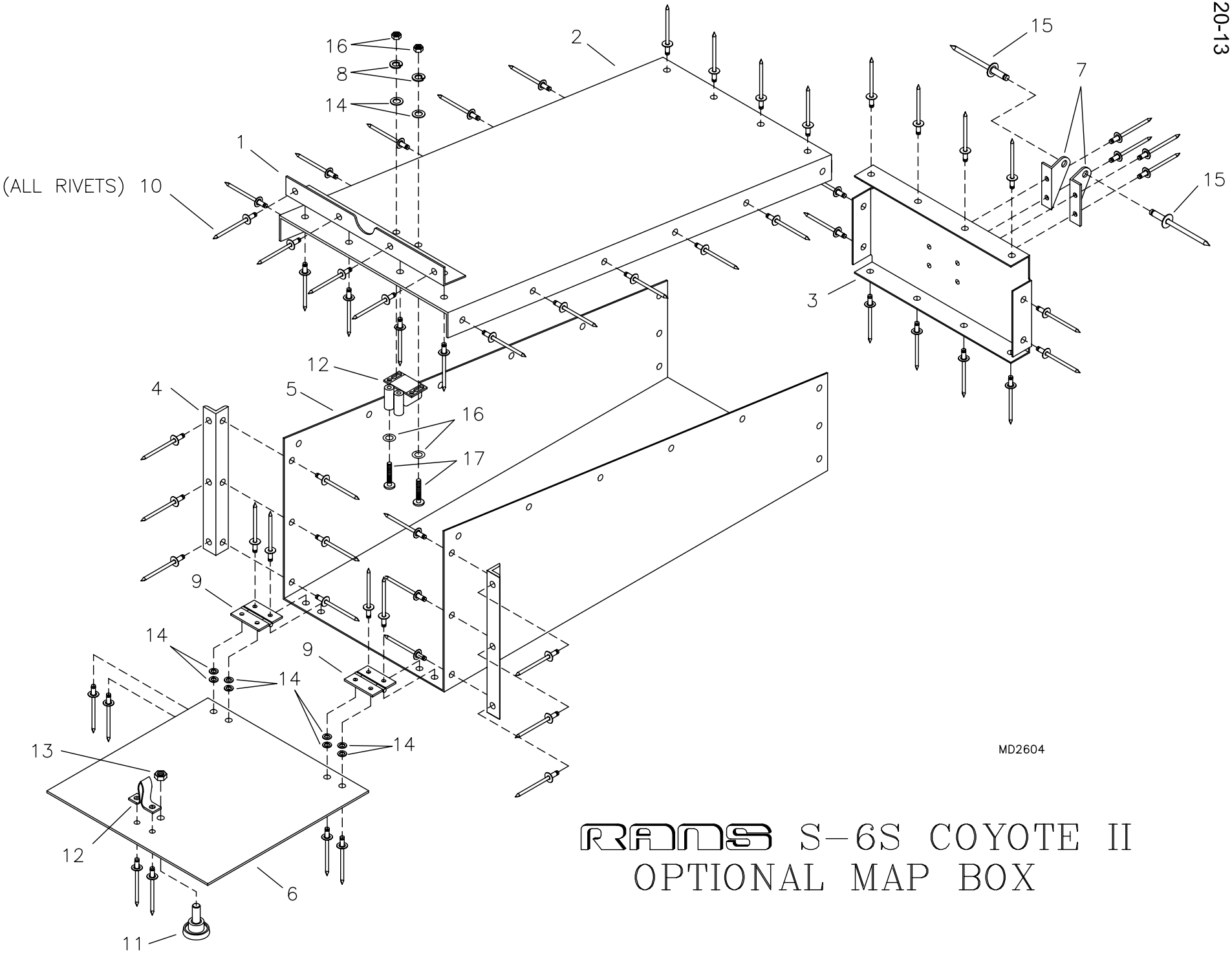

RANS S-6S COYOTE II
OPTIONAL MAP BOX

S-6S COYOTE II - OPTIONAL MAP BOX

#	DESCRIPTION	PART NUMBER	QUANTITY
1.	Top Angle	KPIP0019	1
2.	Map Box Top	KPIP0020	1
3.	Map Box FWD Close Out	KPIP0021	1
4.	Side Angle	KPIP0022	2
5.	Map Box	KPIP0023	1
6.	Map Box Door	KPIP0024	1
7.	FWD Attach Bracket - RH	KPIP0025-R	1
7.	FWD Attach Bracket - LH	KPIP0025-L	1
8.	Loc Washer	AN935-B4	2
9.	Brass Door Hinge	KSIP0006	2
10.	1/8" Aluminum Pop Rivet - Avex	1691-0410	60
11.	Map Box Knob	KSAC0012	1
12.	Door Catch	KSIP0007	1
13.	3/16" Shear Nut	AN364-1032A	1
14.	1/8" Small Brass Washer	AN960-B4	12
15.	1/8" Stainless Steel Pop Rivet - Cherry Q	CCPQ-42	2
16.	Brass Nut	IP-BN	2
17.	Brass Bolt	IP-BB	2

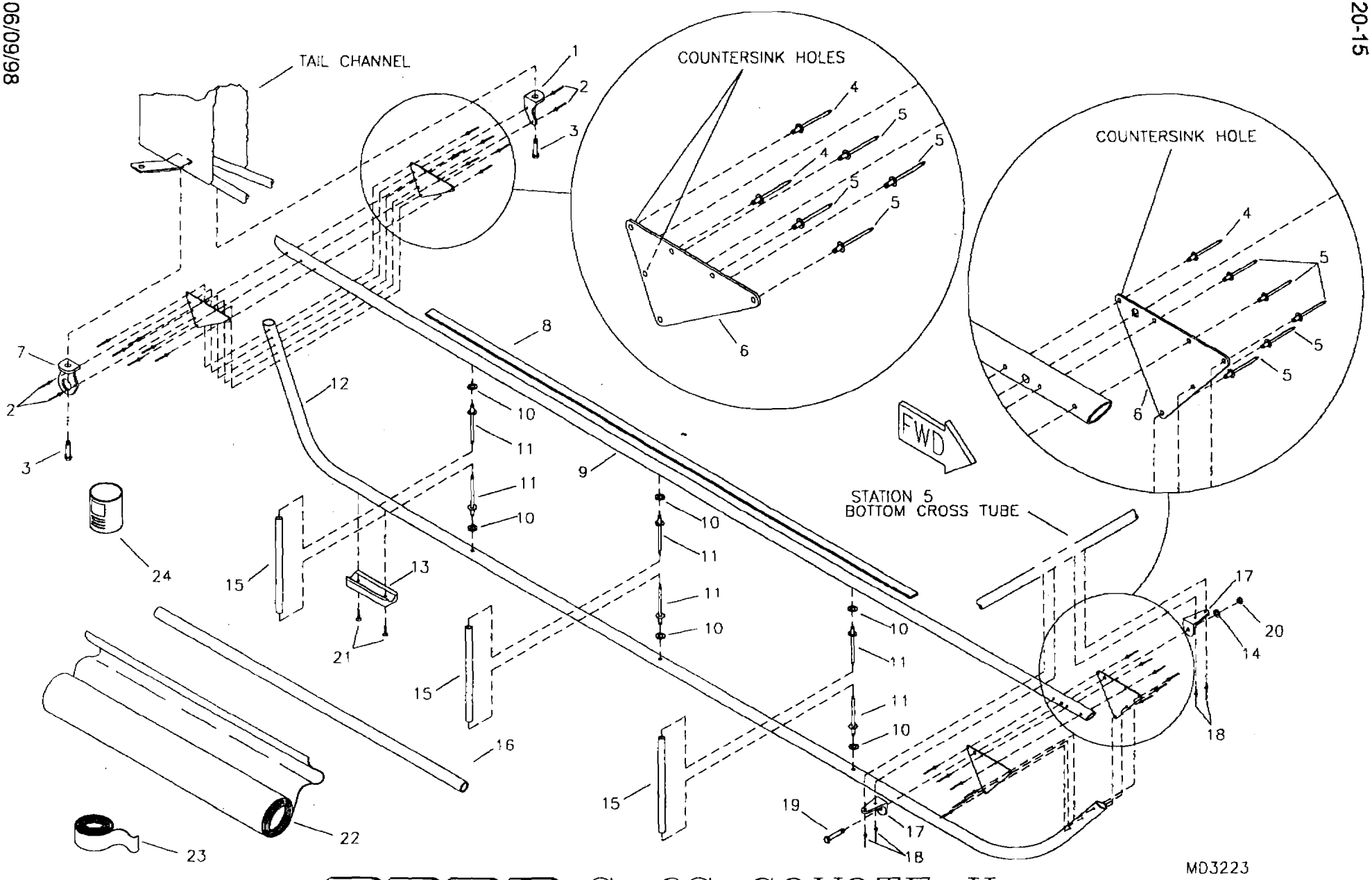

RANS S-6S COYOTE II

OPTIONAL VENTRAL FIN ASSEMBLY
FOR TRIKE WITH NOSE WHEEL PANTS OR FLOAT PLANES

S-6S COYOTE II - OPTIONAL VENTRAL FIN ASSEMBLY & INSTALLATION (TRIKE ONLY)

#	DESCRIPTION	PART NUMBER	QUANTITY
1.	Attach Angle	KPVS0026	1
2.	1/8" Stainless Steel Pop Rivet - Cherry Q	CCPQ-46	4
3.	1/4" Bolt *	AN4-16A	0
4.	1/8" Aluminum Countersink Rivet	AACQ-4-2	6
5.	1/8" Stainless Steel Pop Rivet - Cherry Q	CCPQ-42	18
6.	Ventral Fin Gusset	KPVS0024	4
7.	Attach Angle	KPVS0025	1
8.	Foam Strip, 3/8" X 1/2"	3/8-FS	72 in
9.	Ventral Fin Top Spar	KPVS0029	1
10.	3/16" Thick Washer	AN960-10	6
11.	3/16" Aluminum Pop Rivet - Cherry Q	AAPQ-62	6
12.	Ventral Fin Bottom Spar	KPVS0030	1
13.	Skid Block	KPVS0027	1
14.	3/16" Thin Washer	AN960-10L	1
15.	Aluminum Tube, 1/2" x .035 x X" **	KAAC0016-1	0
16.	Ventral Fin Raw Stock Kit	KAAC0016	1
17.	Attach Angle	KPVS0023	2
18.	1/8" Stainless Steel Pop Rivet - Cherry Q	CCPQ-44	4
19.	3/16" Bolt	AN3-13A	1
20.	3/16" Shear Nut	AN364-1032A	1
21.	#8 Pan Head Screw	8X1/2 PHS	2
22.	Fabric	KAAC0016-2	0
23.	2" Surface Tape	KAAC0016-3	0 ft
24.	Fabric Adhesive ***	—	0

*Referenced from Tail Channel Assembly.
**Builder must fabricate from raw stock.
***Builder Supplies.

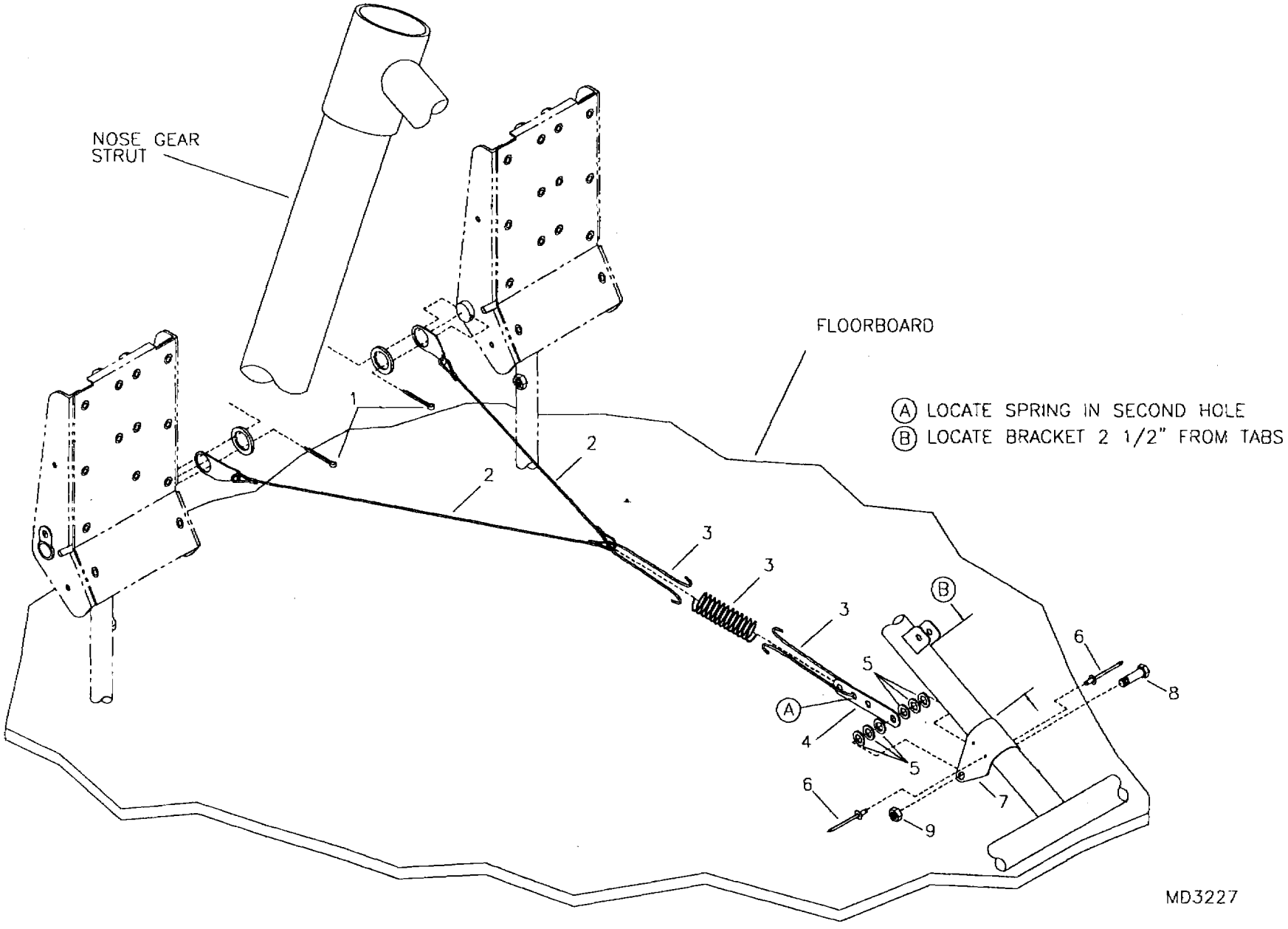

RANS S-6S COYOTE II
YAW STABILIZATION SPRING INSTALLATION

S-6S COYOTE II - OPTIONAL YAW STABILIZATION SPRING INSTALLATION

#	DESCRIPTION	PART NUMBER	QUANTITY
1.	Large Cotter Pin	MS24665-285	2
2.	Stabilization Cable	KARD0010	2
3.	Steer Spring	TW-S-SPR	1
4.	Adjustable Tang	ST-16	1
5.	3/16" Plastic Washer	PW-3	6
6.	1/8" Stainless Steel Pop Rivet - Cherry Q	CCPQ-42	2
7.	Notched Gusset	JS-JGN	1
8.	3/16" Bolt	AN3-10A	1
9.	3/16" Shear Nut	AN364-1032A	1

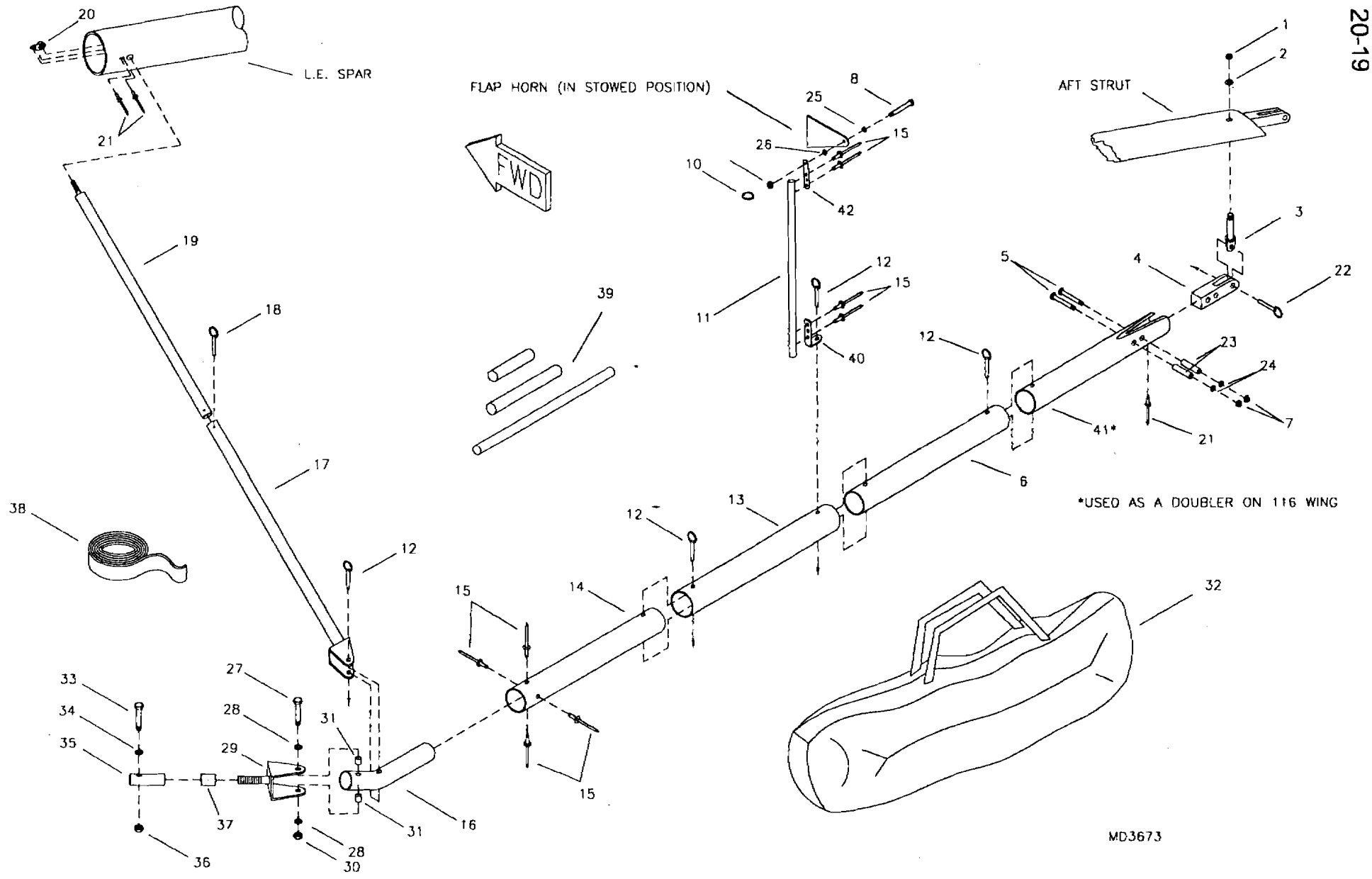

RANS S-6S STANDARD AND 116 WING OPTIONAL SWING WING SYSTEM, WING SUPPORT

S-6S COYOTE II - OPTIONAL SWING WING SYSTEM

WING SUPPORT - STD & 116 WING

#	DESCRIPTION	PART NUMBER	QUANTITY
1.	5/16" Shear Nut	AN364-524A	2
2.	5/16" Thin Washer	AN960-516L	2
3.	5/16" Eyebolt	AN44-13A	2
4.	Lift Strut Connector	KPLS0002	2
5.	3/16" Bolt	AN3-14A	4
6.	Trailing Edge Support Tube, Upper	KPWI0316	2
7.	3/16" Shear Acorn Nut	22NKM02	4
8.	3/16" Bolt **	AN3-7	2
9.	3/16" Castle Nut **	AN310-3	2
10.	Loc Ring	RL 27 1/4	2
11.	Flap Support, 1/2" x .035 x 20" Aluminum Tubing ****	KAAC0029-4	2
12.	1/4" Quick Pin	PIN 1/4X1.5	8
13.	Trailing Edge Support Tube, Middle	KPWI0317	2
14.	Trailing Edge Support Tube, Lower	KPWI0318	2
15.	3/16" Stainless Steel Pop Rivet - Cherry Q	CCPQ-62	16
16.	Pivot Tube	KPWI0319	2
17.	Leading Edge Support Tube, Lower	KPWI0315	2
18.	3/16" Quick Pin	PIN-3/16X.9	2
19.	Leading Edge Support Tube, Upper	KPWI0314	2
20.	1/4" Single Ear Nut Plate	MS21071-L4	2
21.	3/32" Aluminum Pop Rivet	40APR1/4	4
22.	1/4" Quick Pin	PIN 1/4X1.2	2
23.	Aluminum Bushing, 1/4" x .028 x 1 1/4" **	KAAC0029-2	0
24.	3/16" Thin Washer	AN960-10L	4
25.	3/16" Plastic Washer *	PW-3	0
26.	3/16" Thin Washer *	AN960-10L	0
27.	1/4" Bolt	AN4-22A	2
28.	1/4" Thick Washer	AN960-416	4
29.	Swing Wing U Bracket - Lower	KPWI0275	2
30.	1/4" Shear Acorn Nut	52NKTE-048	2
31.	Aluminum Bushing, 3/8" x .058 x 3/16" **	KAAC0029-3	0
32.	Swing Wing Carry-All	KPAC0153	1
33.	3/16" Bolt	AN3-7A	2
34.	3/16" Thick Washer	AN960-10	2
35.	I-Nut	KPAC0151	2
36.	3/16" Shear Nut	AN364-1032A	2
37.	Drilled Bushing Aluminum Insert	JS-BUC-B	2
38.	1/2" Black Foam Tape ***	KSAC0021	12 in
39.	Swing Wing - Raw Stock Kit	KAAC0029	1
40.	Adjustable Tang - Bent	ST-16-BENT	2
41.	Trailing Edge Doubler/Extension	KPWI0331	2
42.	Adjustable Tang	ST-16	2

*Supplied with Base Kit.
**Replaces part in Base kit.
***Only necessary with Bubble Doors.
****Builder must modify.

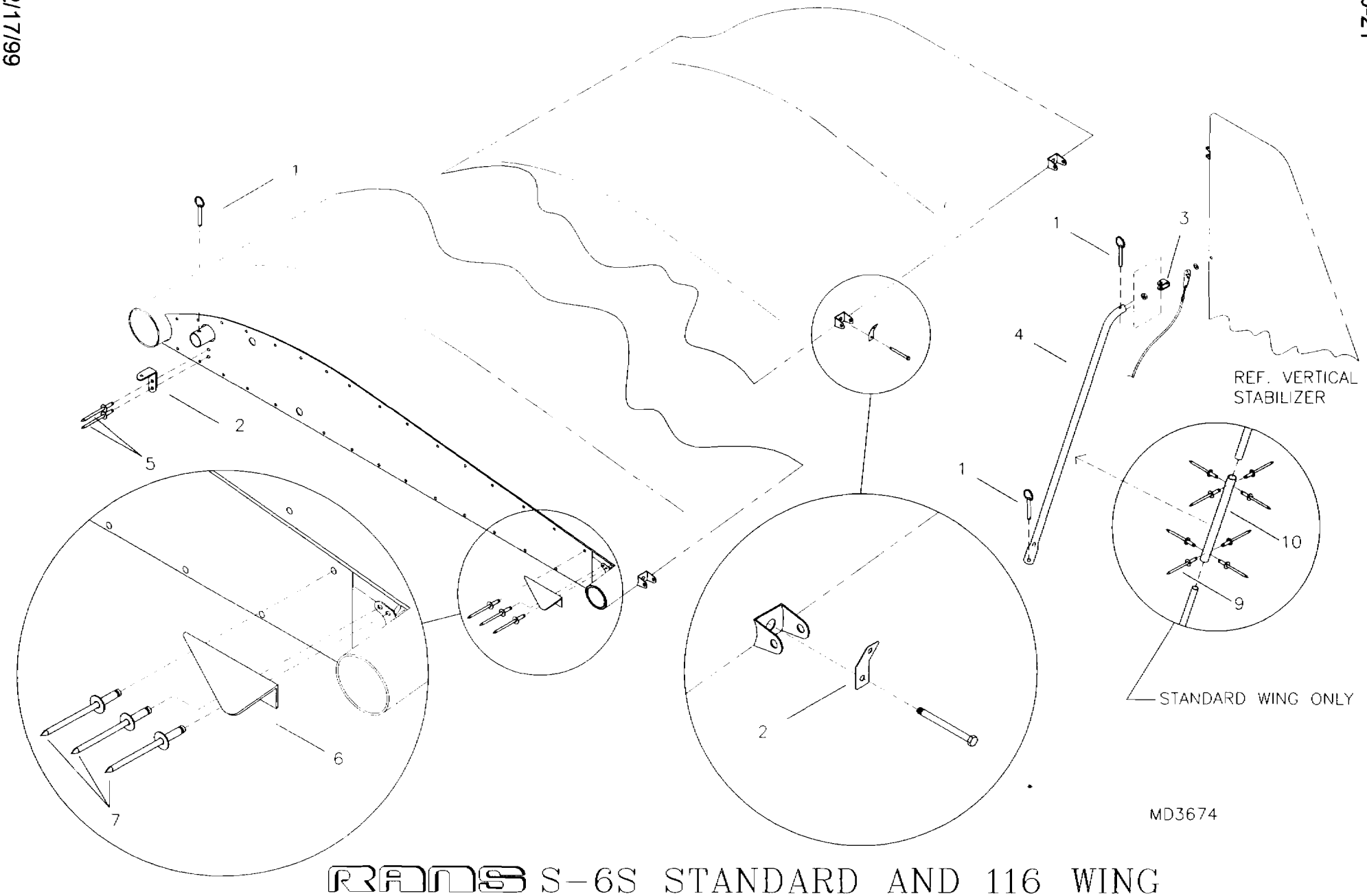

RANS S-6S STANDARD AND 116 WING
OPTIONAL SWING WING SYSTEM TAIL BRACE AND HARDWARE

S-6S COYOTE II - OPTIONAL SWING WING SYSTEM

TAIL BRACE & HARDWARE - STD & 116 WING

#	DESCRIPTION	PART NUMBER	QUANTITY
1.	3/16" Quick Pin	PIN-3/16X.9	4
2.	Adjustable Tang *	ST-16	4
3.	Shackle	RL-205-T	2
4.	Tail Brace	KPWI0320	2
5.	3/16" Stainless Steel Pop Rivet - Cherry Q	CCPQ-62	4
6.	Skylight Support, Left	KPWI0321-L	1
7.	Skylight Support, Right	KPWI0321-R	1
8.	1/8" Aluminum Pop Rivet - Avex	1691-0410	6
9.	1/8" Stainless Steel Pop Rivet - Cherry Q **	CCPQ-42	16
10.	Tail Brace Extender, 7/8" x .058 * , **	KAAC0029-5	0

*Builder must modify, refer to text for instructions.
**Standard Wing ONLY.

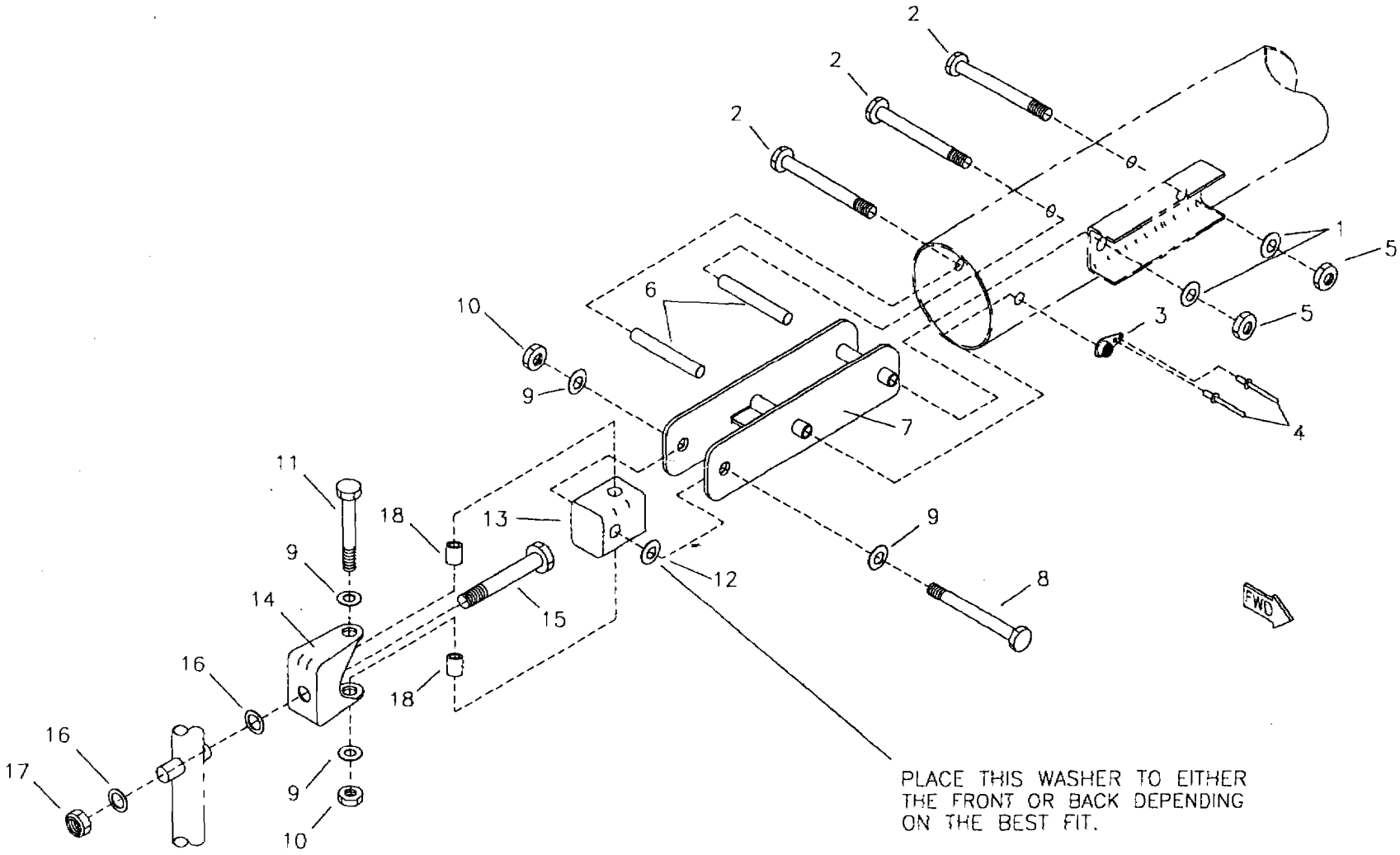

RANS S-6S COYOTE II
OPTIONAL SWING WING SYSTEM, UNIVERSAL HINGE

S-6S COYOTE II - OPTIONAL SWING WING SYSTEM

UNIVERSAL HINGE - STD & 116 WING

#	DESCRIPTION	PART NUMBER	QUANTITY
1.	3/16" Thin Washer *	AN960-10L	0
2.	3/16" Bolt *	AN3-23A	0
3.	3/16" Single Ear Nut Plate *	MS21051-L3	0
4.	3/32" Aluminum Pop Rivet *	40APR1/8	0
5.	3/16" Tensile Nut *	AN365-1032A	0
6.	Aluminum Bushing, 1/4" x .028 x 1 7/8" * , **	KAAC0004-4	0
7.	Trailing Edge Spar Root Fitting *	W-TES-RF	0
8.	1/4" Bolt *	AN4-16A	0
9.	1/4" Thick Washer *	AN960-416	0
10.	1/4" Shear Nut	AN364-428A	4
11.	1/4" Bolt	AN4-22A	2
12.	1/4" Thin Washer	AN960-416L	4
13.	Swing Wing Swivel Block	KPWI0271	2
14.	Stainless Steel U Bracket	KPWI0323	2
15.	5/16" Bolt *	AN5-20A	0
16.	5/16" Thick Washer *	AN960-516	0
17.	5/16" Tensile Nut *	AN365-524A	0
18.	Aluminum Bushing, 3/8" x .065 x 1/4" **	KAAC0029-1	0

*Reference Wing, supplied with Base Kit.
**Builder must fabricate from raw stock.

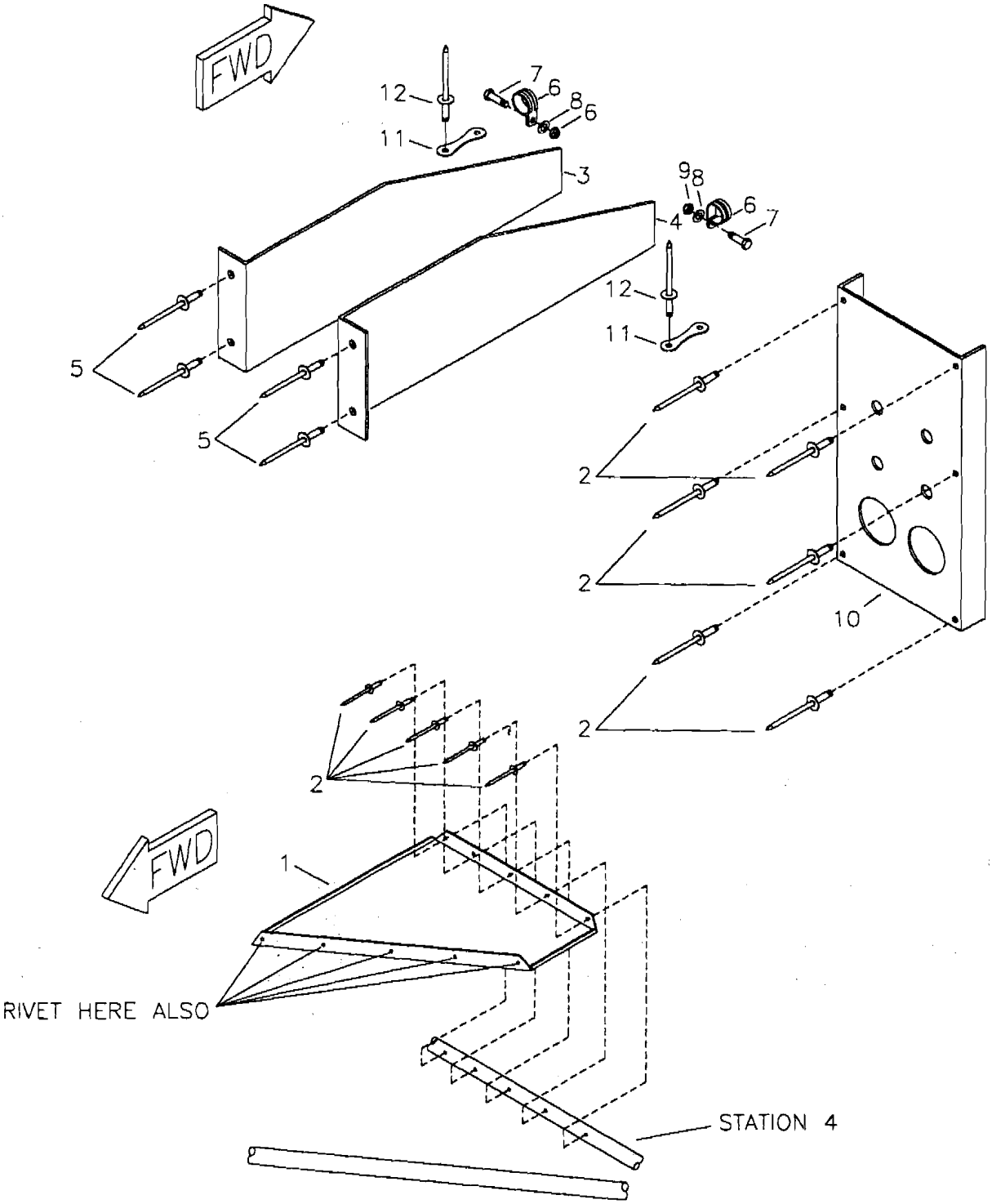

MD4267

RANS S-6S COYOTE
OPTIONAL AVIONICS MOUNTS

S-6S COYOTE II - OPTIONAL AVIONICS MOUNTS

#	DESCRIPTION	PART NUMBER	QUANTITY
1.	VHF Antenna Backing Plate	KPAV0001	1
2.	1/8" Aluminum Rivet	AAPQ-42	16
3.	Triple Radio Mount Plate-LH	KPAV0004-L	1
3.	Single Radio Mount Plate-LH	KPAV0002-L	1
3.	Double Radio Mount Plate-LH	KPAV0003-L	1
4.	Single Radio Mount Plate-RH	KPAV0002-R	1
4.	Double Radio Mount Plate-RH	KPAV0003-R	1
4.	Triple Radio Mount Plate-RH	KPAV0004-R	1
5.	1/8" Stainless Steel Rivet	CCPQ-42	4
6.	1/2" Cushion Clamp	MS21919-WDG8	2
7.	3/16" Bolt	AN3-3A	2
8.	3/16" Thin Washer	AN960-10L	2
9.	3/16" Shear Nut	AN364-1032A	2
10.	Headset Jack Mount Plate	KPAV0017	1
11.	Hummer Tang	T12-HT6	2
12.	3/16" Stainless Steel Rivet	CCPQ-62	2